सत्यमेव जयते

Government of Bombay
Legal Department

BOMBAY
RULES & ORDERS
UNDER
BOMBAY ACTS

VOLUME I

Containing text in full of Rules and Orders made under Bombay Acts enacted till the end of 1948

SIXTH EDITION

(Corrected up to the 30th June 1950)

Price—Rs. 17 As. 8 *or* £1 8*s.*

BOMBAY
PRINTED AT THE GOVERNMENT CENTRAL PRESS
1950

Obtainable from the Superintendent, Government Printing and Stationery
Bombay, or through the High Commissioner for India,
India House, Aldwych, London, W.C. 2.

PREFACE

This new edition of the statutory Rules and Orders applying exclusively to the State of Bombay, unlike the former editions, has been divided into two separate series: (1) statutory Rules and Orders under the Bombay enactments as published in the Bombay Code, and (2) statutory Rules and Orders under Central and other enactments. The last edition wherein both series were comprised was the fourth edition published in the year 1936. The fifth edition which was published in the year 1943 was confined only to the second series. The present edition is, therefore, designated the "Sixth Edition". The two series into which this edition is divided are entitled, respectively: "Bombay Rules and Orders under Bombay Acts" and "Bombay Rules and Orders under Central Acts".

2. Each series is divided into two parts comprising continuous volumes. The first part contains Rules and Orders which are deemed to be of sufficient importance to be printed in full; while the second part contains only lists of other Rules and Orders. From both parts are excluded generally such Rules and Orders as are of temporary nature or of restricted application or of purely local significance or of little general importance. Subject to these excepted categories, it is proposed to make the second part as complete as possible so that between the two parts the whole field of subordinate legislation of general application and importance will be covered.

3. The first part of the Bombay Rules and Orders under Bombay Acts comprises two volumes which are issued in the loose-leaf style, already adopted for the Bombay Code. The first volume contains Rules and Orders under Bombay Acts, enacted till the end of 1948. The second volume will contain Rules and Orders under Acts enacted from 1949 onwards. The paging of both the volumes is continuous, and sufficient provision is made in the binder of the second volume for including therein Rules and Orders which may be made under Acts to

be enacted hereafter, and which will be issued as additional pages in continuation. Replacement pages will also be issued from time to time embodying changes which may be made in the Rules and Orders included in these two volumes.

4. Only such Rules and Orders are included in these two volumes as (1) have been made by the Government of Bombay, or (2) are applicable to the whole State of Bombay though they may have been made by other authorities. Subject to the exceptions specified in paragraph 2 above, the collection of Rules and Orders made by the Government of Bombay has been made as comprehensive as possible; and unlike the fourth edition, the material, which was included in well-known Manuals issued by the Administrative Departments under the Government of Bombay, has also been brought together in these volumes so as to render a reference to any other Government Manual unnecessary. From the Rules made by other authorities which are applicable to the whole State of Bombay have been excluded Rules and Orders made by the High Court of Judicature at Bombay, as they are available to the public in compilations issued by the High Court.

5. Rules and Orders under repealed Acts which have been continued in force either by the repealing enactment or by virtue of section 24 of the General Clauses Act, 1897, or section 25 of the Bombay General Clauses Act, 1904, have been inserted under Acts now in force; and foot-notes indicate the provisions of such Acts under which they have been saved.

6. The enactments under which Rules and Orders are arranged follow the same order as in the Bombay Code. Rules and Orders are grouped in chronological order under the respective section of the enactment to which they are referable. At the head is printed in bold type the reference to the principal notifications under which the Rules or Orders are issued, and then follows a list in chronological order of all amending notifications. The text of the Rules

or Orders which follows thereafter embodies all the amendments made by such notifications. This scheme has been followed except in cases where it was not possible to incorporate an amendment in the principal notification ; in such cases the amending notification is itself printed in full at its chronological place under the respective section. Rules and Orders which are not made by the Government of Bombay but which have been included in these volumes are printed as appendices under the relevant enactments.

7. The text is printed as modified up to the end of June 1950, and adaptations have also been carried out to bring it in accord with the Constitution of India. These adaptations were carried out by notifications recently issued and the notifications have been printed as an Appendix to this volume with a view to avoiding repeated reference to them at the several material places in the text.

8. The text as printed represents the view of its final form taken by the Legal Department as at present advised. Communications regarding suggestions in that behalf may be addressed to the Secretary to the Government of Bombay, Legal Department.

P. M. LAD, I.C.S.,
Secretary to the Government of Bombay,
Legal Department.

Bombay, 15th August 1950.

CHRONOLOGICAL TABLE

Year.	No.	Short title or subject.	Section or provision under which Rules or Orders are made.	Page.
1	2	3	4	5
1852 and 1863	XI and VII	The Bombay Rent-free Estates Act, 1852, and The Exemptions from Land-revenue (No. 2) Act, 1863.	Sch. B, Ss. 8 and 10 of Act XI of 1852 and S. 2 (*3*) of Bom. VII of 1863.	1
			Sch. B. R. 10 of Act XI of 1852 and S. 2 (*3*) of Bom. VII of 1863.	4
1876	X	The Bombay Revenue Jurisdiction Act, 1876.	S. 1 ...	5
1863	V	The Gas Companies Act, 1863 ...	S. 27 ...	7
1868	II	The Bombay Ferries and Inland Vessels Act, 1868.	S. 14B (*2*) ...	9
			S. 17 ...	12
1874	II	The Civil Jails Act, 1874 ...	S. 9 ...	13
			Ss. 9 and 12 ...	13
			S. 12 ...	13
1874	III	The Bombay Hereditary Offices Act, 1874.	S. 82 ...	15
			S. 84 ...	16
1876	II	The Bombay City Land Revenue Act, 1876.	S. 40 ...	17
			S. 41 ...	18
1879	V	The Bombay Land Revenue Code, 1879.	S. 4 ...	21
			S. 18 ...	22
			S. 22 ...	23
			S. 55 ...	24
			S. 62 ...	24
			S. 73-A ...	25
			S. 73-A (*2*) ...	30
			S. 98 ...	30
			S. 128 ...	31
			Ss. 213 and 214 ...	31
			S. 214 (*1*) ...	135
			Ss. 214, 74 and 76 ...	136
1879	VII	The Bombay Irrigation Act, 1879 ...	S. 4 ...	137
			S. 4 (*b*) ...	137
			Ss. 61 and 70 ...	138
			S. 70 ...	138
			S. 89 ...	187
1882	VII	The Bombay Landing and Wharfage Fees Act, 1882.	S. 2 ...	191
			S. 5 (*c*) ...	194
			S. 5 (*d*) ...	210
			Ss. 5 and 6 ...	210
			S. 6 ...	210
1883	I	The Bombay Highway Act, 1883 ...	S. 2 ...	211
			S. 4 ...	213
			S. 8 ...	218

Year.	No.	Short title or subject.	Section or provision under which Rules or Orders are made.	Page.
1	2	3	4	5
1883	V	The Bombay Public Authorities Seals Act, 1883.	S. 3 ...	219
1887	IV	The Bombay Prevention of Gambling Act, 1887.	S. 6 ...	223
1887	VI	The Matadars Act, 1887 ...	S. 1 ... S. 18 ...	225 225
1888	III	The Bombay Municipal Corporation Act.	S. 509 (1) and (2) ...	227
1889	I	The Bombay Village Sanitation Act, 1889.	S. 19 (5) ...	229
1901	III	The Bombay District Municipal Act, 1901.	S. 55 ...	233
1905	I	The Bombay Court of Wards Act, 1905.	S. 46 ...	239
1906	II	The Mamlatdars' Courts Act, 1906 ...	Ss. 3 (1) and 4 ... S. 5 (1) ...	263 264
1909	III	The Prince of Wales Museum Act, 1909.	S. 5 ...	267
1912	VI	The Bombay Medical Act, 1912 ...	S. 6 ... S. 16 ... S. 19 (2) ...	273 273 274
1912	VII	The Bombay Smoke Nuisances Act, 1912.	S. 11 ...	297
1915	I	The Bombay Town Planning Act, 1915.	S. 52 ...	305
1915	IV	The Bombay City Survey Act, 1915 ...	S. 18 ...	315
1918	VI	The Bombay Disqualification of Aliens Act, 1918.	S. 5 ... S. 6 ...	317 317
1920	XV	The City of Bombay Primary Education Act, 1920.	S. 15 ... S. 18 ...	319 319
1920	XVII	The Bombay Pleaders Act, 1920 ...	Ss. 7 (*1*) (*e*) and 8 (*d*) ...	327
1923	I	The Bombay Entertainments Duty Act, 1923.	S. 6 (3) ... S. 7 ... S. 10 ... Rule 26 of Rules for securing payment of entertainment duty.	329 329 337 336
1923	VI	The Bombay Local Boards Act, 1923 ..	S. 38A (*1*) ... S. 80–A ... S. 93 (*1*) (*a*) ... S. 95 ...	339 344 345 345

Year.	No.	Short title or subject.	Section or provision under which Rules or Orders are made.	Page.
1	2	3	4	5
1923	VI	The Bombay Local Boards Act, 1923 ...	S. 133 (*b*) and (*h*) ...	346
			S. 133 (*c*) ...	361
			S. 133 (*c*), (*f*) and (*h*) ...	363
			S. 133 (*d*) ...	501
			S. 133 (*e*) ...	505
			S. 133 (*g*) ...	508
			S. 133 (*h*) ...	515
			S. 133 ...	530
1925	V	The Bombay Prevention of Adulteration Act, 1925.	S. 7 ...	531
1925	VI	The Bombay Betting Tax Act, 1925 ...	S. 5 ...	533
			S. 8 (*1*) ...	533
			S. 9 ...	533
			S. 11 ...	535
1925	VII	The Bombay Co-operative Societies Act, 1925.	S. 4 ...	539
			S. 31 (*2*) ...	543
			S. 28 (*2*) (*a*) ...	544
			S. 33 (*2*) (*a*) ...	544
			S. 33 (*2*) (*b*) ...	545
			S. 71 ...	546
			The Bombay Co-operative Tribunal Regulations, 1949.	569
1925	XVIII	The Bombay Municipal Boroughs Act, 1925.	S. 69 ...	585
			S. 70 ...	585
			S. 179 (*1*) ...	586
1928	III	The Bombay Non-Agriculturists' Loans Act, 1928.	S. 6	589
1929	VII	The Bombay Maternity Benefit Act, 1929.	S. 14 ...	599
1929	XVIII	The Bombay Borstal Schools Act, 1929.	Ss. 2 (*2*), 4 and 13 ...	603
			S. 19 ...	603
1930	XXV	The Bombay Local Fund Audit Act, 1930.	S. 4 ...	611
			S. 15 ...	611
1932	II	The Bombay Finance Act, 1932 ...	S. 8 ...	623
			S. 11 ...	624
			Part II, Sch. I ...	628
			Ss. 16 and 17(*c*) ...	630
			S. 22 ...	631
			S. 29 ...	632
			S. 29 (*2*) (*b*) and (*c*) ...	633
			S. 29 (*2*) (*aa*) ...	634
			S. 29 (*2*) (*b*) and (*c*) ...	636
			S. 36 ...	637
			S. 40 ...	637
			The Bombay Newspaper Advertisements Tax Tribunal Regulations, 1949	648
1932	XV	The Bombay Weights and Measures Act, 1932.	S. 11A (*1*) ...	659
			S. 41 ...	660
			S. 46 ...	725

Year.	No.	Short title or subject.	Section or provision under which Rules or Orders are made.	Page.
1	2	3	4	5
1933	VI	The Bombay Village Panchayats Act, 1933	S. 108 (*1*) (*a*) ..	727
			S. 108 (*1*)(*a*),(*b*),(*d*),(*e*),etc.	730
			S. 108 (*1*) (*c*) and (*q*) ..	736
			S. 108 (*1*) (*el*) ..	747
			S. 108 (*1*) (*f*) ..	751
			S. 108 (*1*) (*g*), (*h*), (*i*), (*j*), (*l*)	773
			S. 108 (*1*) (*gg*) ..	782
			S. 108 (*1*) (*m*) ..	783
			S. 108 (*1*) (*m*) and (*s*)	787
			S. 108 (*1*) (*n1*) and (*n2*) ..	802
			S. 108 (*1*) (*o*) ..	805
			Ss. 109 and 19 ..	806
			Ss. 109 and 28 ..	807
			S. 112 (*1*) ..	808
1933	XXII	The Bombay Live-stock Improvement Act, 1933.	S. 23 ..	811
1934	IX	The Bombay Trade Disputes Conciliation Act, 1934.	S. 20 ..	817
1934	X	The Bombay Devadasis Protection Act, 1934.	S. 7 ..	821
1935	VII	The Bombay Nurses, Midwives and Health Visitors Registration Act, 1935.	S. 22 ..	825
1935	XXV	The Bombay Public Trusts Registration Act, 1935.	S. 2 (*2*) ..	887
			S. 4 ..	887
			S. 27 ..	888
1935	XXXIV	The Bombay Motor Vehicles Tax Act, 1935.	S. 3 (*1*) ..	907
			S. 18 ..	908
			S. 20 ..	909
				927
1936	XX	The Bombay Opium Smoking Act, 1936.	Ss. 12, 13, 14, 15, 17, 18 and 27.	
1936	XXIII	The Parsi Public Trusts Registration Act, 1936.	S. 4 ..	929
			S. 25 ..	929
1937	III	The Bombay Legislature Members' Salaries and Allowances Act, 1937.	S. 5 ..	941
1938	XIX	The Bombay Probation of Offenders Act, 1938.	S. 13 ..	945
1938	XXVI	The Bombay Medical Practitioners' Act, 1938.	S. 29 ..	951
			S. 32 ..	989
			S. 38 (*2*) ..	993
1939	IX	The Bombay Gas Supply Act, 1939 ..	S. 11 ..	995
1939	X	The Bombay Lifts Act, 1939 ..	S. 2 (*2*) ..	1003
			S. 3 (*a*) ..	1003
			Ss. 4, 5(*1*) and (*3*), 6 (*2*), 8 (*1*), 9 (*1*) and 11.	1003
			S. 8 (1) and 11 ..	1003
			S. 10 ..	1003
			S. 12 ..	1003
1939	XII	The Bombay Revenue Tribunal Act, 1939.	S. 4 (*3*) ..	1023
			S. 12 ..	1023
			S. 13 ..	1025

CHRONOLOGICAL TABLE

Year.	No.	Short title or subject.	Section or provision under which Rules or Orders are made.	Page.
1	2	3	4	5
1939	XXII	The Bombay Agricultural Produce Markets Act, 1939.	S. 25 ..	1029
			S. 26 ..	1029
			S. 29 ..	1055
1942	XXVIII	The Bombay Land Improvement Schemes Act, 1942.	S. 24 ..	1057
1942	XXX	The Bombay Cotton Control Act, 1942.	Ss. 6 (2) & 8 (1) ..	1063
			S. 8 (2) ..	1063
			S. 14 ..	1063
1944	VIII	The Bombay Growth of Foodcrops Act, 1944.	S. 1 (2) ..	1065
			S. 13 ..	1065
1945	XXIII	The Bombay Beggars Act, 1945 ..	S. 33 ..	1069
1946	V	The Bombay Sales Tax Act, 1946 ..	S. 6 (1) ..	1081
			S. 7 (2) ..	1082
			S. 29 ..	1083
			The Bombay Sales Tax Tribunal Regulations, 1948 ..	1148
1946	VI	The Bombay Sales of Motor Spirit Taxation Act, 1946.	S. 25 ..	1163
1946	XX	The Bombay Electricity (Special Powers) Act, 1946.	S. 5 (2) ..	1175
1946	XXVII	The Bombay Cotton (Statistics) Act, 1946.	S. 13 ..	1179
1947	III	The Bombay Home Guards Act, 1947..	S. 8 ..	1181
1947	VI	The Bombay Public Security Measures Act, 1947.	S. 6 (3) ..	1187
1947	XI	The Bombay Industrial Relations Act, 1946.	S. 62 (1) ..	1189
			S. 113 ..	1189
			S. 123 ..	1190
			The Industrial Court Regulations, 1947 ..	1231
			The Labour Courts (Practice and Procedure) Rules, 1947.	1259
1947	XXII	The Bombay Hindu Divorce Act, 1947.	S. 16 ..	1283
1947	XXVIII	The Bombay Agricultural Debtors Relief Act, 1947.	S. 47 (2) ..	1285
			S. 55 ..	1285
1947	XXXI	The Bombay Money-lenders Act, 1946.	S. 13-A ..	1307
			S. 39 ..	1307
1947	LI	The Bombay Habitual Offenders Restriction Act, 1947.	S. 15 (2) ..	1319
			S. 22 ..	1319
1947	LVI	The Bombay Warehouses Act, 1947 ..	S. 34 ..	1337

Year. 1	No. 2	Short title or subject. 3	Section or provision under which Rules or Orders are made. 4	Page 5
1947	LVII	The Bombay Rents, Hotel and Lodging House Rates Control Act, 1947.	S. 15 ..	1355
			S. 49 ..	1355
1947	LXI	The Bombay Primary Education Act, 1947.	S. 2 (15) ..	1363
			S. 38 ..	1363
			S. 63 (*1*) and (2) ..	1363
1947	LXII	The Bombay Prevention of Fragmentation and Consolidation of Holdings Act, 1947.	S. 37 ..	1589
1947	LXIV	The Bombay Forward Contracts Control Act, 1947.	S. 3 (5) ..	1595
1948	XX	The Poona University Act, 1948.	S. 65 (3) ..	1597
1948	XXII	The Bombay Refugees Act, 1948.	S. 9 (1) ..	1599
			S. 14 ..	1599
			S. 15 ..	1599
			S. 16 (2) ..	1605
1948	XXXIII	The Bombay Land Requisition Act, 1948.	S. 19 ..	1607
			S. 19 (2) ..	1611
1948	LIV	The Bombay Lotteries and Prize Competitions Control and Tax Act, 1948.	S. 31 ..	1615
1948	LXVII	The Bombay Tenancy and Agricultural Lands Act, 1948.	S. 67 (3) ..	1625
			Ss. 76 and 86 ..	1625
			S. 82 ..	1630
			S. 83 ..	1647
			S. 88 (2) ..	1648
1948	LXIX	The Bombay Housing Board Act, 1948.	S. 2 (4) ..	1649
			S. 66 ..	1649
1948	LXXI	The Bombay Children Act, 1948.	S. 109 ..	1653
1948	LXXII	The Bombay Khar Lands Act, 1948.	S. 46 ..	1663
1948	LXXIX	The Bombay Shops and Establishments Act, 1948.	S. 4 ..	1677
			S. 10 (1) (*a*) ..	1686
			S. 17 ..	1686
			S. 30 ..	1686
			S. 67 ..	1687
1948	LXXXII	The Bombay Sugarcane Cess Act, 1948.	S. 3 ..	1705
			S. 4 ..	1706
			S. 14 ..	1706

List of Abbreviations.

A. & F. D.	Agriculture and Forests Department.
D. D.	Development Department.
E. D.	Education Department.
E. & I. D.	Education and Industries Department.
F. D.	Finance Department.
G. D.	General Department.
H. & L. G. D.	Health and Local Government Department.
H. D.	Home Department.
J. D.	Judicial Department.
L. D.	Legal Department.
Lab. D.	Labour Department.
Lab. & H. D.	Labour and Housing Department.
L. S. G. & P. H. D.	Local Self-Government and Public Health Department.
P. D.	Political Department.
P. & R. D.	Political and Reforms Department.
P. & S. D.	Political and Services Department.
P. W. D.	Public Works Department.
R. C. D.	Reconstruction Department.
R. D.	Revenue Department.
Reh. D.	Rehabilitation Department.
B. G.	Bombay Government Gazette.
Bom. Co-opt. T.	Bombay Co-operative Tribunal.
G. N.	Government Notification.
No.	Number.
Pt.	Part.
p.	page.
Pol. or Poll.	Political.
R. T.	Revenue Tribunal.
Sch.	Schedule.
S.	Section.

PART I

Containing text in full of Rules and Orders made under Bombay Acts enacted till the end of 1948.

THE BOMBAY RENT-FREE ESTATES ACT, 1852 (XI OF 1852) AND THE EXEMPTIONS FROM LAND-REVENUE (No. 2) ACT, 1863 (BOM. VII OF 1863).

G. N., R. D., No. 10336, dated 12th October 1908 (B. G., Pt. I, p. 1686).

Amended by G. N., R. D., No. 9886-F/33, dated 19th January 1939.

Sch. B, ss. 8 & 10 of Act XI of 1852 and s. 2 (3) of Bom. VII of 1863.

In exercise of the powers conferred by Act XI of 1852, Schedule B, sections 8 and 10, and by Bombay Act VII of 1863, section 2, clause 3, and of all other powers enabling him in this behalf, the Governor in Council is pleased, in supersession of the rules published in Government Notification in the Revenue Department, No. 2702, dated the 23rd April 1902, as subsequently amended, to issue the following rules concerning the resumption and continuance of lands held for service :—

1. An inquiry into the title by which any land held for service is enjoyed may be instituted from time to time by such officer as the State Government may direct.

2. Lands originally held for service, which have been continued, or may hereafter be continued, under section 15, Bombay Act III of 1874, on condition of payment of a certain portion of the assessment thereof in commutation of service, shall continue to be held in accordance with the terms of the Sanads issued or hereafter to be issued in confirmation of the said commutation settlements.

3. Service lands, in respect of which no such commutation settlement has been effected, and which have been already declared by Government, or by any officer under the orders of Government, to be resumable on the demise of certain persons, or on the extinction of certain families or lines of descent, shall be resumed accordingly.

4. Service lands which do not fall under No. 2 or No. 3 of these rules shall be continued, subject to the provisions of Bombay Act III of 1874, and of any other law for the time being in force relating thereto, to the heirs of the present holders, or in the event of the same being at any time lawfully alienated, to the heirs of the alienees, without restriction as to adoption or female or collateral succession ; but such lands shall be resumed in default of any heir in whom, in the ordinary course of descent, the deceased holder's private property would vest, and shall not be liable to be dealt with under the ordinary law for the time being in force relating to intestate property:

Provided that if the Collector is at any time satisfied that the service in respect of which any such lands are held is no longer performed or that its performance is no longer necessary, or that for the service performed the remuneration derived from the profits of the enjoyment of such lands is unnecessarily high or, in the case of service lands to which the provisions of Bombay Act III of 1874 do not apply, if it shall appear that the holder has been guilty of any serious offence or misconduct, or that such lands or any part thereof or any of the profits thereof have or has by succession, or otherwise, come into the possession of a female or of any person other than the person who for the time being is duly authorized to perform and does actually perform the service in respect of which such lands are held, the Collector may in his discretion direct either (1) the resumption of such lands,

or (2) the continuance of the same subject to such new conditions as he shall deem fit to impose, or (3) the resumption of a portion of such lands and the continuance of the rest thereof, subject to such conditions as aforesaid.

5. When the Sanad issued in confirmation of any service commutation settlement expressly authorizes the alienation or transfer of the service lands, the same shall be continued without question to any lawful holder thereof on fulfilment of the terms of the Sanad. In every other case contemplated by No. 2 of these rules, and in every case contemplated by Nos. 3 and 4 of these rules, if any land held for service or any of the profits thereof shall at any time be or become alienated contrary to the provisions of Bombay Act III of 1874, or of any other law for the time being in force, or, in the case of land to which the provisions of Bombay Act III of 1874 do not apply, if the same or any of the profits thereof shall be alienated or in any way encumbered without the previous sanction of the State Government the said land shall, if the Collector deem fit, be forthwith resumed, anything in, the said rules to the contrary notwithstanding.

6. It shall be lawful for the Collector, whenever it may be necessary, in carrying out any of the provisions of No. 4 or No. 5 of these rules—

(*a*) summarily to evict any person wrongfully in possession of any land, or

(*b*) to levy any rent due by any person in the manner that may be prescribed in any law for the time being in force for the levy of a revenue demand.

Explanation.—For the purposes of this rule any person in possession of land, the resumption of which has been directed under No. 4 or No. 5 of these rules shall be deemed to be a person wrongfully in possession thereof.

Sch. B, R. 10 of Act XI of 1852 and s. 2 (3) of Bom. VII of 1863.

G. N., P. D., No. 2942, dated 17th May 1898 (B. G., Pt. I, p. 424).

Amended by G. N., P. D., No. 4861, dated 8th July 1901.
Amended by G. N., P. & R. D., No. 1766/34-A, dated 4th February 1938.

In exercise of powers referred to in Rule 10 of Schedule B of Act XI of 1852 and of the second sub-clause to clause 3 of section 2 of Bombay Act VII of 1863 His Excellency the Governor in Council is pleased to issue the following Rule for the purpose of determining the terms to which the continuance of Jaghirs and Saranjams and other alienations of a political nature shall be subject :—

1. Saranjams shall be ordinarily continued in accordance with the decision already passed or which may hereafter be passed by the State Government ind each case.

2. A Saranjam which has been decided to be hereditarily continuable shall ordinarily descend to the eldest lineal male representative, in the order of primogeniture, of the senior branch of the family descended from the first British grantee or any of his brothers who were undivided in interest. But the State Government reserve to themselves their right for sufficient reason to direct the continuance of the Saranjam to any other member of the said family, or, as an act of grace, to a person adopted into the said family with the sanction of the State Government. When a Saranjam is thus continued to an adopted son, he shall be liable to pay to the State Government a Nazarana not exceeding one year's value of the Saranjam, and it shall be levied from him in such instalments as the State Government may in each case direct.

3. In the case of Saranjams which have been decided to be continuable for two generations with a pension to the third, the eldest surviving son shall be considered to represent a generation, and the entire Saranjam shall descend to him when he represents the second generation from the first British grantee, and a pension when he represents the third. But if the elder son or sons of the first British grantee, have died before their father, but leave sons, the grandson who ranks first in the order of primogeniture shall, on his grandfather's death, be regarded as the second generation, and the entire Saranjam shall be continued to him, no pension being granted to the next generation.

4. Proposed orders regarding succession to Saranjams in accordance with the above rules, must as they constitute a technical regrant of the Saranjam be submitted, in all cases, for the sanction of the State Government.

5. Every Saranjam shall be held as a life estate. It shall be formally resumed on the death of the holder, and in cases in which it is capable of further continuance it shall be made over to the next holder as a fresh grant from the State Government, unencumbered by any debts or charges save such as may be specially imposed by the State Government itself.

5A. In cases in which there is no suitable person to whom a regrant can immediately be made ; or in which an immediate re-grant would be injurious to the interest of the estate, the Saranjam may be attached and placed under Government management for such period as the State Government may consider necessary, and the revenues of the Saranjam after deduction of the expenses of management, may be assigned for the maintenance of the representatives of the deceased Saranjamdar, in such manner, and in such proportion as the State Government may from time to time direct.

6. No Saranjam shall be capable of sub-division.

7. Every Saranjamdar shall be responsible for making a suitable provision for the maintenance of the widow or widows of the preceding Saranjamdar, his own brothers, or any other member of his family who, having a valid claim arising from infancy, mental or physical infirmity, rendering such member incapable of earning a livelihood, may be deemed deserving of support at his hands. When this obligation is not fulfilled by any Saranjamdar, the State Government may direct him to make suitable provision for such persons and may fix the amount, which he shall pay, in each instance : provided that no one who has independant means of his own, or is in the opinion of the State Government otherwise sufficiently provided for, shall be entitled to maintencnce form the Saranjamdar.

8. Every order passed by the State Government under the above rule for the grant of maintenance by a Saranjamdar shall hold good during his life only.

9. If an order passed by the State Government under Rule 7 is not carried out, the State Goverment may, whatever the reason may be, direct the Saranjam or a portion of it, to be resumed, as the circumstances of the case may require. Provision for the members of the Saranjamdar's family entitled to maintenance shall then be made by the State Government out of the revenues of the Saranjam so resumed.

10. Whenever it appears that a Saranjam or its revenue have passed by attachment or any other process of the Civil Court into the hands of a person other than

the Saranjamdar; the State Government will ordinarily direct the Saranjam to be resumed and pass such order as to its re-grant or other disposal as may seem to them fitting.

11. The above rules shall be applicable not only to Saranjams proper, but also to *Chouth* Saranjams.

12. Any Inam granted on political considerations shall be continued in the terms of the Sanad or order creating the grant. In the event of any such Inam passing out of the possession of the family for whose support it was granted, it shall be liable to resumption, unless there be an express provision permitting such transfer in the terms of the grant.

Sch. B, R. 10 of Act XI of 1852 and s. 2 (3) of Bom. VII of 1863.

G. N., P. D., No. 5060, dated 25th June 1912 (B. G., Pt. I, p. 981).

In exercise of the powers referred to in Rule 10 of Schedule B of Act XI of 1852 and of the second sub-clause to clause 3 of section 2 of Bombay Act VII of 1863, the Governor in Council is pleased to direct, with reference to Government Notification No. 2942, dated the 17th May 1898, that all future re-grants of Saranjam villages shall be subject to the conditions that the lands in them shall be surveyed and the record of rights introduced. The introduction of a survey *settlement* into these villages should b left to the option of the grantees for the present.

THE BOMBAY REVENUE JURISDICTION ACT, 1876 (X OF 1876).

G. of I. Notn., Home, Revenue and Agri. Deptts., No. 197, 18th Mar. 1881, republished in G. N., R. D., No. 1702, dated 23-3-1881 (B. G., Pt. I, p. 157). S. 1.

In exercise of the power conferred by the Bombay Revenue Jurisdiction Act, X of 1876, section 1, the Governor General in Council is pleased to direct that so much of section 4 of the enactment as relates to claims to set aside, on the ground of irregularity, mistake or any other ground except fraud, sales for arrears of land revenue shall come into force after six months from the date of this notification.

THE GAS COMPANIES ACT, 1863 (BOM. V OF 1863).

G. N., G. D., No. 6543, dated 19th August 1914 (B. G., Pt. I, p. 1913). **s. 27.**

In exercise of the powers conferred by section 27 of Bombay Act V of 1863 (an Act to confer certain powers on the Bombay Gas Company, Limited, and to enable Government to confer similar powers on other Companies registered and incorporated for the purpose of manufacturing and supplying gas), the Governor in Council is pleased to extend the provisions of the said Act to the Bandra Municipal District.

THE BOMBAY FERRIES AND INLAND VESSELS ACT, 1868 (BOM. II OF 1868).

G. N., P. W. D., No. 266/27, dated 27th June 1933 (B. G., Pt. I, p. 1526). **S. 14 B(2)**

In exercise of the powers conferred by section 14B (2)[1] of the Bombay Ferries Amendment Act, 1933 (Bombay Act No. IV of 1933), Government are pleased to publish for general information the following rules prescribing the manner in which the load-line or free-board shall be marked upon any boat :—

RULES FOR THE MARKING OF FREE-BOARD (LOAD-LINE) FOR FERRY BOATS.

n these rules :—

(a) "*Free-board*" shall mean in the case of open boats, the vertical distance between the uppermost part of a vessel's side at half the length and the mark denoting her maximum load draft; and, in the case of decked boats, the vertical distance between the lowest part of the upper surface of the deck and the mark denoting the maximum load draft.

(b) "*A decked boat*" is a boat which has a deck complete form fore and aft, well laid and caulked, and which has all deck openings protected by coamings and hatches or other water-tight contrivances.

(c) All other boats are to be considered to be "*open boats.*"

(d) "*At half the length*" of a vessel shall mean at half the length as measured on her water-line when on an even keel.

The "*Uppermost part of the vessel's sides*" shall mean the uppermost part of the vessel proper; wash boards and other superstructure should be treated as being non-existent.

2. These rules shall apply to both decked and open boats.

3. The free-board should be not less than 12 inches for boats 20 feet long or less and 18 inches for boats 40 feet long or more. For lengths intermediate between 20 and 40 feet the minimum free-board should be in proportion. The length should be measured from the forward side of the stem to the aft side of the stern post.

3A. In the case of small boats of the dug-out type—

(a) f such boats have a moulded depth of 1′ 6″ or less, the minimum free-board shall be not less than 9″;

(b) if such boats have their free-board increased by stakes or planks, the load line shall be not less than 2″ below the lower edge of the first joint.

[1] Section 14B was inserted in Bom. II of 1868 by Bom. IV of 1933.

(*c*) Such boats (i) must be fitted with out-riggers, known as "ulandis", to give them necessary stability and (ii) must not ply within five miles of the mouth of a river.

4. *Marking*—

(*a*) The free-board as found by these rules is to be plainly marked on each side of the vessel by a circle measuring 12 inches, outside diameter, the line being 1 inch thick. The centre of the circle shall mark the free-board, and it should be placed at half the length of the vessel as measured on her load water-line when on an even keel. The top edge of a line 18 inches long and 1 inch thick shall pass horizontally through this centre.

(*b*) In wooden vessels these circles and lines should be cut into the vessel to a depth of one-eighth of an inch.

(*c*) In iron and steel vessels they should be marked round with a centre punch or chisel.

(*d*) These circles and lines can most conveniently be marked from a template of thin sheet iron or zinc, a small hole one-eighth diameter being made in the centre to take a steadying nail whilst marking. A template with the circle incomplete at the top is convenient as it is suitable for use on vessels where the centre of the circle is less than 6 inches below the moulding, etc., round the vessels' sides. In other cases the circle can be completed by revolving the template about the nail (see figure 1).

(*e*) In the case of decked vessels where the lowest part of the deck (from which point the free-board is measured) may not be at the extreme edge, the free-board can be marked by the following method:—

Place a batten horizontally across the vessel resting on some convenient support such as the bulwarks, hand rails, bollards, etc., from this batten measure to the lowest part of the deck on the inboard side; to this measurement add the free-board as calculated and transfer this to the vessel's side by measuring vertically down from the batten on the outboard end (see figure 2).

(*f*) If a batten of sufficient length to overlap both sides of the vessel is not available, a shorter one may be used as a continuation of a line stretched across (see figure 3).

5. The officer appointed to mark the free-board is held responsible that the boat is of normal dimensions and stable when loaded down to the marks; this should be decided by actual demonstration if any doubt exists.

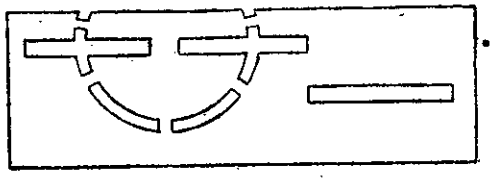

FIG. 1

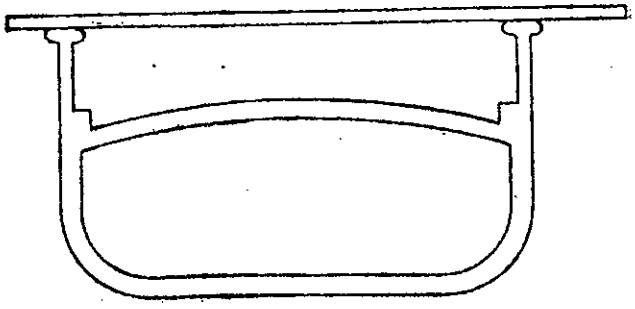

FIG. 2

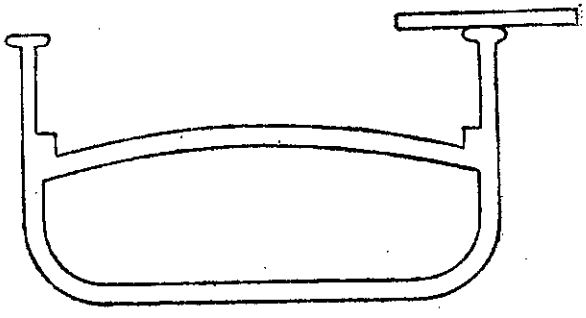

FIG. 3

S. 17.

G.N., P. W. D., No. 4039, dated 20th November 1923 (B. G., Pt. I, p. 2667).

In exercise of the powers conferred by section 17 of the Bombay Ferries Act, 1868 (Bom. II of 1868), and in supersession of the Government Notifications specified in the margin the Government of Bombay is pleased to delegate to all Executive Engineers in the State of Bombay the powers of Government under section 5 of the said Act in respect of such public ferries as are on Government canals and provincial roads.

(1) So much of Government Notification in the General Department dated the 16th December 1868, as relates to the delegation of powers of Government under section 5 of Bombay Act II of 1868;

(2) Government Notification, General Department, dated the 20th January 1869;

(3) Government Notification, General Department, dated the 27th January 1869;

(4) Government Notification, Revenue Department, No. 2305-B, dated the 8th April 1902.

THE CIVIL JAILS ACT, 1874 (BOM. II OF 1874).

G. N., J. D., dated 15th April 1875 (B. G., Pt. I, p. 369).

His Excellency the Governor in Council is pleased to declare the provisions of Bombay Act II of 1874 (An Act for the Regulation of Jails in the City and Presidency of Bombay and the enforcement of discipline therein) to be hereby enacted to and rendered applicable in the Panch Mahals.

G. N., J. D., dated 15th April 1875 (B. G., Pt. I, p. 370). S. 9 and 12.

Amended by G. N., J. D., No. 8549, dated 22nd December 1894.

Amended by G. N., J. D., No. 8842, dated 18th December 1895.

Under the provisions of section 9 of Bombay Act No. II of 1874 (An Act for the Regulation of Jails in the City and Presidency of Bombay and the enforcement of discipline therein), the Honourable the Governor in Council is pleased to declare the establishment of Civil Jails at the following places:—

Poona.	Dharwar.
Ahmednagar.	Karwar.
Dhulia.	Ratnagiri.
Sholapur.	Thana.
Satara.	Ahmedabad.
Belgaum.	Surat.
Kaladgi.	

2. Under the provisions of section 12 of the Act, the Civil Surgeons at the several stations are appointed to attend the Civil Jails at their respective stations, and to perform the duties required by sections 12, 13 and 15 of the Act.

G. N., J. D., No. 3814, dated 31st July 1905 (B. G., Pt. I, p. 977). S. 9.

Pursuant to section 9 of Bombay Act II of 1874, and in supersession of Government Notification in the Judicial Department, No. 895, dated the 5th February 1884, the Governor in Council is pleased to declare the establishment of a Civil Jail at Nasik, with effect from the 1st October 1905.

G. N., J. D., No. 3815, dated 31st July 1905 (B. G., Pt. I, p. 985). S. 12.

In exercise of the powers conferred by section 12 of Bombay Act II of 1874, the Governor in Council is pleased to appoint the Civil Surgeon of Nasik to be the Medical Officer of the Civil Jail at Nasik.

THE BOMBAY HEREDITARY OFFICES ACT, 1874 (BOM. III OF 1874).

G. N., R. D., No. 1861-F/39, dated 12th March 1940 (B. G., Pt. IVA, p. 405). **s. 82.**

Amended by G. N., R. D., No. 1861/39, dated 17th October 1940.

Amended by G. N., R. D., No. 1861/39, dated 24th February 1945.

In exercise of the powers conferred by section 82 of the Bombay Hereditary Offices Act (Bom. III of 1874), the Government of Bombay is pleased to make the following rule, namely:—

"A deputy or a substitute or a temporary officiator appointed on behalf of Government under the provisions of the Bombay Hereditary Offices Act, 1874, or the Matadars' Act, 1887, to officiate as Patel or Kulkarni shall, before he assumes charge of his office, execute in the form appended hereto a bond for Rs. 500 or such smaller amount as the Collector may in any particular case deem reasonable and sufficient with two sureties for the same amount, for the due discharge by him of the trusts of the said office:

Provided that the Commissioner may, in a special case, exempt any deputy, substitute or temporary officiator from furnishing any security:—

Form of Security Bond to be executed by a Deputy or a substitute or a temporary officiator appointed on behalf of Government under the Bombay Hereditary Offices Act or the Matadars' Act to officiate as Patel or Kulkarni.

WHEREAS I, residing at have been appointed to the office of and have been called upon to furnish security in accordance with the rule published in Government Notification, Revenue Department, No. 1861-F/39, dated 12th March 1940, for the due discharge of the trusts of the said office and for the due accounting of all moneys, papers and other property which shall come into my possession or control by reason of such office, I hereby bind myself to pay to the Governor of Bombay (hereinafter referred to as 'the Government'), the amount of any loss or defalcation in my accounts, and to deliver up any papers or other property within such time, and to such person as shall be demanded by the Mamlatdar of such demand to be in writing and to be left at my office or place of residence, and in case of my making default therein I bind myself to forfeit to the Government the sum of rupees (Rs.):

Provided always that nothing herein contained nor the security hereby given shall be deemed to limit my liability in respect of the matters aforesaid to the forfeiture of the said sum of* rupees only, and that should that sum be insufficient to recoup the Government in full for any loss or damage sustained by it in respect of the matters aforesaid, I agree to pay to it on demand such further sum as shall be deemed by the said Mamlatdar to be necessary, in addition to the said sum, to cover such loss or damage as aforesaid.

Place

Dated

(Signature).

*Amount to be specified.

We, (1) residing at
and (2) I residing at
hereby declare ourselves sureties for the abovesaid
that he shall do and perform all that he has above undertaken to do and perform, and in case of his making default therein, we hereby bind ourselves jointly and severally to forfeit to the Governor of Bombay (hereinafter referred to as 'the Government') the sum of* rupees, in which the abovesaid has bound himself, or such smaller or further sum as shall be deemed sufficient by the , to cover any loss or damage which the Government may sustain by reason of such default.

Place 1.

Dated 2.

(Signatures)."

S. 84. **G. N., R. D., No. 4247, dated 22nd July 1881 (B. G., Pt. I, p. 397).**

Under the provisions of sections 5 and 6 of the Pensions Act, 1871, His Excellency the Right Honourable the Governor in Council is pleased to authorize the Deputy and Assistant Collectors of Salt Revenue in charge of Ranges to hear and dispose of claims and grant certificates empowering a Civil Court to take cognizance of claims relating to grants of money payable on the part of Government in the Salt and Continental Customs Revenue Department, and under the provisions of section 84 of the Bombay Hereditary Offices Act, 1874, His Excellency the Right Honourable the Governor in Council is pleased to confer on the Collector of Salt Revenue all such of the powers and duties of a Revenue Commissioner and on the aforesaid officers all such of the powers and duties of a Collector under that Act as are necessary for the lawful control of and are applicable to hereditary offices connected with the said Department.

S. 84. **G.N., R.D., No. 9247/39, dated 17th December 1943 (B. G., Pt. IV-B, p. 438).**

In exercise of the powers conferred by section 84 of the Bombay Hereditary Offices Act (Bom. III of 1874), the Government of Bombay is pleased to confer on Assistant and Deputy Collectors all the powers and duties which under the said Act are required to be performed by a Collector, other than the power to hear an appeal under section 77 of the said Act.

*Amount to be specified.

THE BOMBAY CITY LAND REVENUE ACT, 1876 (BOM. II OF 1876).

G. N., R. D., No. 10076/28, dated 9th February 1933 (B. G., Pt. I, p. 380). S. 40.

In exercise of the powers conferred by section 40 of the Bombay City Land Revenue Act, 1876 (Bom. II of 1876), as amended, and in supersession of Government Notification No. 2374, dated 13th March 1914, the Governor in Council is pleased to make the following rules and prescribe the following fees for the inspection, search or obtaining copies of all maps and land registers and other records of the Bombay City Survey and all records concerning the land or the land-revenue kept in the office of the Collector of Bombay :—

1. Every application for search, inspection and supply of copies of, or extracts from, the records shall be made in writing on paper bearing a Court Fee Stamp of the value of two annas.

The date of receipt shall be endorsed upon the application and the date on which the requisition was satisfied and the amount of the fee received shall be duly recorded.

2. All fees for search, inspection or copies, including value of stamps required, must be paid in advance.

3. Certified copies shall be given on papers stamped in accordance with Article 24, Schedule I of Act II of 1899, as amended.

4. All certified copies applied for of documents or extracts from documents in the records shall be prepared and compared by members of the Collector's establishment and charges shall be made at the following rates :—

Copying Fees.

For Ordinary Documents.

Annas 4 per folio of 100 words or fraction of 100 words, subject to a minimum charge of Re. 1.

For Tabulated Documents.

	Rs.
Extracts from Survey Registers, each entry	1
Extracts from Rent Rolls, each entry	1
Extracts from Reference Books, each entry	1
Transfer Schedules, each entry	1

For Plans.

	Rs.
For plans of areas below 100 square yards	4
For plans of areas between 100 and 500 square yards	6
For plans of areas between 500 and 1,000 square yards	8
For plans of areas between 1,000 and 3,000 square yards	10
For plans of areas between 3,000 and 10,000 square yards	16
For plans of areas over 10,000 square yards	20

COMPARING FEES.

For Documents.

The comparing fee shall be equal to the copying fee, subject to the minimum fee of Rs. 2 and the maximum fee of Rs. 4.

For Plans.

For copies of Revenue Survey plans the comparing fee shall be Rs. 6 for plans of areas below 3,000 square yards, and Rs. 10 for plans of areas above 3,000 square yards.

For copies of other plans the comparing fee shall be Rs. 4.

5. A fee of Rs. 10 for each day shall be charged in every case for search and inspection when permitted by the Collector. In no case shall less than Rs. 10 be charged for search or inspection.

6. No search, inspection or copies of documents shall be given in cases where in the opinion of the Collector such a course would be prejudicial to the interests of Government.

7. This notification shall take effect from the 1st day of March 1933.

S. 41. **G. N., R. D., dated 17th January 1877 (B. G., Pt. I, p. 50).**

Amended by G. N., R. D., No. 11201, dated 20th November 1916.

Amended by G. N., R. D., No. 4298/33, dated 16th February 1938.

His Excellency the Governor in Council is pleased to publish the following Rules under section 41 of Bombay Act No. II of 1876 :—

RULES REGARDING THE PRODUCTION OF RECORDS OF THE COLLECTOR OF BOMBAY BEFORE THE COURTS OF LAW UNDER SUBPOENA DUCES TECUM.

1. Every summons for a production of the Collector's records, maps, or rent rolls into Court should be accompanied with a fee of Rupees five, for which a receipt in due form will be given, and the amount credited to the State Government.

2. A clerk, surveyor, inspector or other non-gazetted officer or any gazetted officer under the Collector of Bombay producing the record on behalf of the Collector shall, subject to the orders of the Collector, be entitled to buggy-hire and daily attendance fee according to the scale noted in the margin.

Non-gazetted Officers.

Persons getting Rs. 30 or less per month ...	Re. 1/2
Persons getting Rs. 31 to 60 per month ...	Rs. 3/5
Persons getting Rs. 61 to 100 per month ...	Rs.
Persons getting above Rs. 100 per month ...	Rs.

Gazetted Officers.

Rs. 30.

3. In the event of the party refusing to pay the fees or buggy-hire mentioned in rules 1 and 2, the clerk or other persons charged with production of the required record shall attend the Court, and inform the Judge that the fee has not been paid, and the order given by the Judge in the matter should be reported to the Collector in writing.

G. N., R. D., No. 6829, dated 5th October 1891 (B. G., Pt. I, p. 817). **S. 41.**

In exercise of the powers conferred by section 41 of the Bombay City Land Revenue Act, 1876, His Excellency the Governor in Council is pleased to make the following rules regarding the disposal of Government lands for the purposes of salt manufacture :—

(1) Government salt lands or lands occasionally overflowed by salt water should not ordinarily be disposed of under section 25 of the Act, without first ascertaining by reference to the Salt Department whether they are wanted or likely be wanted for salt manufacture.

(2) On receiving an intimation from the Collector of Salt Revenue that any unoccupied Government land at the disposal of the Collector of Bombay is wanted or is likely to be wanted for salt manufacture, the Collector of Bombay may, if he sees no objection to its appropriation for that purpose, dispose of such land to the Salt Department, and shall, in such case, cause a note to that effect to be made in the Survey Register.

Such land shall thenceforth be at the disposal of the Collector of Salt Revenue, subject to the general orders of Government to let for the maunfacture of salt or to make other arrangements as to its use for that purpose, on such conditions and for such period as, subject to the said orders, he may deem fit.

G. N., R. D., No. 4860/24, dated 10th December 1925 (B. G., Pt. I, p. 3235). **S. 41.**

In exercise of the powers conferred by section 41 of the Bombay City Land Revenue Act, 1876 (Bom. II of 1876), the Governor in Council is pleased to direct that the Collector of Bombay may remit at his discretion the fees chargeable and payable under sections 13 and 16 of the said Act.

THE BOMBAY LAND REVENUE CODE, 1879 (BOM. V OF 1879).

G. N., G. D., No. 3376, dated 28th Nov. 1877, paras. 1, 2 and 3 (B. G., Pt. I, p. 1008).

Her Majesty's Principal Sceretary of State for India having sanctioned for this Presidency the appointments of three Revenue and Police Commissioners, who are also to have charge of minor Political Agencies, His Excellency the Governor in Council is pleased to issue the following orders.

2. The Revenue and Police Commissioners should be styled Commissioners.

3. The charges under their control which are redistributed as follows* should be distinguished as Northern, Central and Southern Divisions, instead of the present designations of Northern, Southern and Kanarese Divisions :—

*For distribution of charges under the control of the Commissioners see. G.N., R.D., No. 2796/49, dated 18th November 1949.

G. N., R. D., No. 2796/49, dated 18th November 1949 (B. G., Pt. IV-B, p. 2113). S. 4.

In exercise of the powers conferred by section 4 of the Bombay Land Revenue Code, 1879 (Bom. V of 1879), and in exercise of the powers conferred by section 4 of the said Code as continued in force by the States Merger (Governors' Provinces) Order, 1949, and in supersession of all the previous orders in this behalf, the Government of Bombay is pleased to direct that the districts specified in column 1 of the Schedule hereto appended which have been reconstituted under the said Code shall, with effect from 1st December 1949, form part of the territories under the general control of the Commissioner specified against them in column 2 of the said Schedule.

Schedule.

Districts. 1	Commissioner. 2
1. Banas Kantha District ..	Commissioner, Northern Division.
2. Sabar Kantha District ..	
3. Mehsana District ..	
4. Amreli District ..	
5. Baroda District ..	
6. Dangs District ..	
7. Ahmedabad District ..	
8. Kaira District ..	
9. Panch Mahals District ..	
10. Broach District ..	
11. Surat District ..	
12. Thana District ..	
13. Bombay Suburban District ..	

Districts.	Commissioner.
1	2
1. Ahmednagar District ..	Commissioner, Central Division.
2. East Khandesh District ..	
3. West Khandesh District ..	
4. Nasik District ..	
5. Poona District ..	
6. Satara North District ..	
7. Sholapur District ..	
8. Kolaba District ..	
1. Belgaum District ..	Commissioner, Southern Division.
2. Bijapur Disrtict ..	
3. Dharwar District ..	
4. Kanara District ..	
5. Ratnagiri District ..	
6. Satara South District ..	
7. Kolhapur District ..	

G. N., R. D., dated 4th Apr. 1871 (B. G., Pt. I, p. 424).

The Right Honourable the Governor in Council is pleased to appoint the Superintendent of Mahableshwar, in the Satara Collectorate, a Deputy Collector under the provisions of Act XXI of 1852, and to invest him with the powers exercised by a Mamlatdar under Bombay Act V of 1864.*

G. N., R. D., dated 2nd Dec. 1868 (B. G., Pt. I, p. 1196).

It is hereby notified with reference to section 3 of Bombay Act I of 1868, published in the *Bombay Government Gazette* of the 1st instant, that the powers and duties of a Collector may not be conferred by a Collector on any Assistant or Deputy Collector who has not passed the Departmental Examination according to the higher standard.

This order does not refer to Deputy Collectors appointed before the issue of the Government order of the 10th April 1866, directing Deputy Collectors to undergo Departmental Examinations.

S.18. **G. N., R. D., No. 5370, dated 31st July 1901 (B. G., Pt. I, p. 1373).**

In exercise of the power conferred by section 18 of the Bombay Land Revenue Code, 1879, the Governor in Council is pleased to appoint the Director of Land Records and Agriculture to be Commissioner of Survey for the purposes of section 98 and No. 55 of the Rules under section 214 of the said Code.

---

*Now Bombay Act II of 1906.

G. N., R. D., No. 9159, dated 18th Nov. 1896 (B. G., Pt. I, p. 1161). **S. 22.**

Amended by G. N., R. D., No. 10477, dated 21st December 1896.
Amended by G. N., R. D., No. 3717, dated 17th May 1897.
Amended by G. N., R. D., No. 3908, dated 5th June 1899.
Amended by G. N., R. D., No. 5219, dated 25th July 1901.
Amended by G. N., R. D., No. 5332, dated 30th June 1905.
Amended by G. N., R. D., No. 4602, dated 6th May 1908.

In exercise of the power conferred by section 22 of the Bombay Land Revenue Code, 1879, the Honourable the Governor in Council is pleased to direct that—

(1) the officers mentioned below shall have and use seals, *viz.* :

(*1*) Commissioners of Divisions; * * *

(*2*) * * *

(*3*) Collectors;

(*4*) Assistant Collectors; * * *

(*5*) Deputy Collectors (including Treasury Officers of the Deputy Collector's Grade), *and Superintendants of Land Records and Agriculture*;

(*6*) Mamlatdars;

(*7*) Mahalkaris;

(*8*) * * * *

(*9*) Huzur Treasurers (Central Division), (*S. D.*) *and* (*N. D.*);

(*10*) City Survey Officers (N. D.);

(*11*) Resident Magistrates of Bandra and Borsad invested with powers under Act III of 1876;

(*12*) District Inspectors of Land Records and Agriculture in the Northern, Central and Southern Divisions;

(*13*) Assistants in charge Head Quarters Offices, Agricultural Department Dharwar and Poona, and in the Northern Division when appointed; and

(2) that the seals shall be circular and of the following dimensions and material

(*a*) Silver seals of which the diameter should be $1\frac{3}{4}$ inches for the officers name at serial numbers (*1*) to (*3*) hereinbefore mentioned;

†(*b*) Seals of brass, copper or gunmetal (whichever may be the most durable material) of which the diameter should be $1\frac{1}{2}$ inches for the officers named at serial numbers (4) and (5) hereinbefore mentioned;

(*c*) Seals of brass, copper or gunmetal (whichever may be the most durable material) of which the diameter should be one inch only for the officers named, at serial numbers (6) to (13) hereinbefore mentioned; and

(3) that pending the preparation of the abovementioned seals, the seals hitherto used shall continue to be used by such of the officers hereinbefore mentioned as have used them.

---

†This clause has since been modified by Government Notification No. 4602, Revenue, dated 7th May 1908, printed on page 24 *infra*.

S. 22.

G. N., R. D., No. 4602, dated 7th May 1908 (B. G., Pt. I, p. 659).

In exercise of the power conferred by section 22 of the Bombay Land Revenue Code, 1879 (Bom. V of 1879), the Governor in Council is pleased to modify clause (*b*) of paragraph 2 of Government Notification in the Revenue Department, No. 9159, dated the 18th November 1896, by directing that the diameter of the seal of Huzur Treasury Officers shall be one inch instead of one and a half inches.

For rules under section 44 of the Act, see the rules under section 75(*c*) of the Forest Act, VII of 1878, published under Notification No. 202, dated 9th January 1885.‡

S. 55.

G. N., R. D., No. 4437, dated 4th June 1896 (B. G., Pt. I, p. 583).

In exercise of the powers conferred by section 55 of the Bombay Land Revenue Code, 1879, the Governor in Council is pleased to authorize all Collectors in the Presidency, to fix such rates as he may from time to time deem fit to sanction for the use, by land-holders and other persons, of water within the limits of their respective districts in all cases in which the right to such water vests in Government, and no rate in respect thereof is leviable under the Bombay Irrigation Act, 1879.

S. 62.

G. N., R. D., No. 2154, dated 1st March 1909 (B. G., Pt. I, p. 385).

In exercise of the powers conferred by section 62 of the Bombay Land Revenue Code, 1879 (Bom. V of 1879), the Governor in Council is pleased to direct that in the Thana and Kolaba Districts and in any other district to which Government may hereafter by notification extend these orders, the following conditions, regulating the cutting of trees for tahal shall be annexed to the occupancy before permission to occupy is granted under section 60 of the said Code, namely :—

Conditions.

1. Save as provided in conditions 2 and 3 no occupant shall in the land occupied cut down, pollard, or lop any tree whatever.

2. An occupant may in the land occupied cut down, lop or pollard for his own use injaili trees that are not fruit trees in accordance with the following rules but not otherwise :—

(*a*) in the case of injaili trees 10 feet* high or higher—

(*i*) the leading shoot must be permanently preserved along with all shoots from the topmost third of the main stem ;

(*ii*) shoots that have taken less than 2 years to grow may not be touched ; only shoots that have taken 2 years or more to grow may be lopped off ;

(*b*) in the case of injaili trees less than 10 feet high—

(*i*) where several stems spring from the same root or stump the best of such stems with all shoots from it shall be left untouched till the stem is 10 feet

‡See *B. G.*, 1885, Pt. I, p. 66.

*This should be translated in Marathi " 1½ purush ", a purush being the height to which an average man can reach standing.

high, but all other shoots from the root or stump or from the ground within a yard† of the untouched stem may be cut down to the ground;

(*ii*) no stem growing singly may be cut or its side shoots lopped, unless it has an untouched stem growing within a yard† of it.

Provided that, with the previous permission of a revenue officer not lower in rank than a Mamlatdar, such occupant may cut down for his own use :—

(*a*) any injaili tree not useful for tahal or fruit, and

(*b*) any fruit tree and any leading shoot or best stem preserved under clause (*a*) (*i*) or (*b*) (*i*) of this rule when in the opinion of such officer such tree, shoot or stem is no longer useful for fruit or tahal.

3. With the previous permission of a revenue officer not inferior in rank to an Assistant or Deputy Collector, an occupant may in the land occupied cut down for his own use any tree other than an injaili tree.

Explanation.—The Collector or Prant Officer may, by written order delivered to the Patel authorize the occupants of a village to cut down the after-growth of teak, blackwood and tivas, subject to the condition that two leading shoots from each stump with all their branches are left permanently untouched and may at any time modify such order by withdrawing such authority either from particular occupants or from all the occupants or in respect of particular areas, and such order as so modified shall be a saving order under condition 3.

Note.

1. In these conditions :—

(*a*) the word "tree" includes all ground shoots which grow into trees, such as Kuda, Kudi, Pethari, and Chera, but does not include bushes; and the word "bush" shall be deemed to include all ground shoots which do not grow into trees such as Karand, Ukshi, Phangli, Dhaiti and Nirgudi;

(*b*) the word "occupant" includes—

(*i*) all persons who personally cultivate the soil, whether as tenants or in their own right;

(*ii*) all land-lords resident in a village and holding land therein, whether they cultivate the soil personally or through tenants;

but does not include non-resident land-lords.

G. N., R. D., No. 1116-A, dated 18th Feb. 1902 (B. G., Pt. I, p. 298).

S. 73-A.

In exercise of the power conferred by section 73-A of the Bombay Land Revenue Code, 1879 (Bombay Act V of 1879), as amended by the Bombay Land Revenue Code Amendment Act, 1901 (Bombay Act VI of 1901), His Excellency the Governor

†This should be translated in Marathi "1½ hat".

in Council is pleased to declare the provisions of that section applicable to the following villages in the Nandurbar Taluka and the Navapur Petha of the Khandesh District, namely :—

I.—Villages of the Nandurbar Taluka.

1 Bhone
2 Betre
3 Dhanore (Kasbe)
4 Ghirasgaon
5 Jalke
6 Khairale
7 Khodade
8 Kothali Khurd
9 Nagsar
10 Nandarkhe
11 Natawad
12 Newale
13 Ozarde
14 Pimplod Khurd
15 Ranale
16 Thanepada
17 Umarde Budruk
18 Velawad
19 Virchak
20 Waghole
21 Wasdare
22 Bhadwad Budruk
23 Bhardu
24 Bijgaon
25 Borchak
26 Chitvi
27 Chorvihir
28 Devalipada
29 Dhong
30 Kadwan
31 Keli
32 Khadki
33 Khandbare
34 Kholghar
35 Kholvihir
36 Mahalkadu
37 Malwan
38 Mograni
39 Nawali
40 Nimboni Khurd, tarf Bhadwad
41 Nimdarde
42 Palshi
43 Pimple
44 Salwan
45 Shrawani
46 Sirwade
47 Umarvihir
48 Wadadhe Budruk
49 Wanjale
50 Watavi
51 Arditara
52 Bhangde
53 Bhil Bhavali
54 Bhil Jamboli

55 Gamdi
56 Gujarpur
57 Kasare
58 Karanjale
59 Khairave Khurd, tarf Dhanore
60 Khairave Budruk, tarf Bhadwad
61 Kothade
62 Lakhmikhede
63 Mangrul
64 Marod
65 Nasarpur
66 Pawle
67 Ranikhadkale
68 Rayagad
69 Shale
70 Shegwe
71 Shehi
72 Tapikhadkale
73 Umaj
74 Wadjakhan
75 Wadli
76 Wagde
77 Waslai
78 Bandharpada
79 Tilasar.

II.—Villages of the Navapur Petha.

1 Amlan
2 Anandpur
3 Babarghat
4 Bari
5 Bhadbhunje
6 Thawre
7 Bil Majre Kelwan
8 Bokalzar
9 Borzar
10 Chacharbundhe
11 Chapti
12 Chauki
13 Dapur
14 Dhaite
15 Dhaj
16 Dhanrat
17 Gadat
18 Gad Majre Wadpatal
19 Ghod Jamne
20 Jamki
21 Jamne
22 Jamtale
23 Kachali
24 Kamlapur
25 Kamod
26 Karanji Budruk
27 Karanji Khurd
28 Kataswan
29 Khapade
30 Khekde
31 Khokarwade
32 Khokse
33 Koreghat
34 Kot Khamb
35 Kukrani
36 Majwan
37 Manikpur
38 Mirkot
39 Morkaranjwe
40 Nagzari
41 Nanchal
42 Nandwan
43 Narayanpur Kasba
44 Nurabad
45 Pangran
46 Parchuli
47 Pati Bedki
48 Payarvihir
49 Pethapur
50 Pimprani
51 Rayapur
52 Sari Majre Umarthe
53 Savrat
54 Shetgaon

55 Shelud
56 Sonkhadke
57 Suli
58 Thawe
59 Thuti
60 Uchal
61 Wadadhe
62 Wadkalambi
63 Zamanzar
64 Zaranpada
65 Lonkhach
66 Khamchodudhar

S. 73-A.

G. N., R. D., No. 5348, dated 2nd Aug. 1902 (B. G., Pt. I, p. 1933).

In exercise of the power conferred by section 73-A, of the Bombay Land Revenue Code, 1879 (Bombay Act V of 1879), as amended by the Bombay Land Revenue Code Amendment Act, 1901 (Bombay Act VI of 1901), His Excellency the Governor in Council is pleased to declare the provisions of that section applicable to the following villages in the Nandurbar Taluka of the Khandesh District, viz. :—

1 Lekurvali
2 Tarapur

S. 73-A.

G. N., R. D., No. 1116-E., dated 18th Feb. 1902 (B. G., Pt. I, p. 299).

In exercise of the power conferred by section 73-A of the Bombay Land Revenue Code, 1879 (Bombay Act V of 1879), as amended by the Bombay Land Revenue Code Amendment Act, 1901 (Bombay Act VI of 1901), His Excellency the Governor in Council is pleased to declare the provisions of that section applicable to the village of Umbharpata in the Pimpalner Taluka of the Khandesh District.

S. 73-A.

G. N., R. D., No. 1116-D., dated 18th Feb. 1902 (B. G., Pt. I, p. 299).

In exercise of the power conferred by section 73-A of the Bombay Land Revenue Code, 1879 (Bombay Act V of 1879), as amended by the Bombay Land Revenue Code Amendment Act, 1901 (Bombay Act VI of 1901), His Excellency the Governor in Council is pleased to declare the provisions of that section applicable to the following villages in the Shahada Taluka of the Khandesh District, namely :—

1 Khatghar
2 Khaparkheda
3 Akaspur
4 Bhuta
5 Tavlai
6 Ganora
7 Titri
8 Chirda
9 Najhiri
10 Virpur
11 Dara

S. 73-A.

G. N., R. D., No. 1116-B., dated 18th Feb. 1902 (B. G., Pt. I, p. 298).

In exercise of the power conferred by section 73-A of the Bombay Land Revenue Code, 1879 (Bombay Act V of 1879), as amended by the Bombay Land Revenue Code Amendment Act, 1901 (Bombay Act VI of 1901), His Excellency the Governor

in Council is pleased to declare the provisions of that section applicable to the following villages in the Shirpur Taluka of the Khandesh District namely :—

1 Sikval
2 Palsner
3 Sangvi
4 Fatiapur
5 Harakhed
6 Pimprala
7 Borari
8 Amba
9 Khamala
10 Rohini
11 Varla
12 Bhoili
13 Hated
14 Burki
15 Khamkheda
16 Rohisa
17 Ihikheda

G. N., R. D., No. 116-C., dated 18th Feb. 1902 (B. G., Pt. I, p. 298). **S. 73-A.**

In exercise of the power conferred by section 73-A of the Bombay Land Revenue Code, 1879 (Bombay Act V of 1879), as amended by the Bombay Land Revenue Code Amendment Act, 1901 (Bombay Act VI of 1901), His Excellency the Governor in Council is pleased to declare the provisions of that section applicable to the following villages in the Taloda Taluka of the Khandesh District namely :—

1 Amli
2 Amalpada
3 Ankushvihir
4 Ban
5 Bandhara
6 Borikuwa
7 Chavgaon
8 Chauki Ambli
9 Dhanpur Budruk
10 Dhekati
11 Ekdhad
12 Gadhavli
13 Ichhagavhan
14 Jambli
15 Juwani
16 Khardi Khurd
17 Khushgavhan
18 Kumbharkhan
19 Kundwe
20 Lakhapur
21 Pandharke
22 Pathadi
23 Rajgad *urf* Ramgad
24 Ranipur
25 Rapapur
26 Ratanpada
27 Retpada
28 Sawar
29 Sojarbara
30 Somawali Khurd
31 Umarkuwa
32 Umarkuwa *tarf* Unai
33 Walher
34 Zumkatti
35 Khadka
36 Akalutara
37 Relpada
38 Alwani
39 Khardi Budruk
40 Malkhurd
41 Singaspur
42 Lakadkot

S. 73-A. **G. N., R. D., No. 296, dated 10th Jan. 1908 (B. G., Pt. I, p. 42).**

In exercise of the power conferred by section 73-A of the Bombay Land Revenue Code, 1879 (Bom. V of 1879), as amended by the Bombay Land Revenue Code Amendment Act, 1901 (Bom. VI of 1901), His Excellency the Governor in Council is pleased to declare the provisions of that section applicable to the villages of Shrikheda and Biladi in the Shahada Taluka of the West Khandesh District.

S. 73-A(2). **G. N., R. D., No. 10363-A., dated 22nd October 1907 (B. G., Pt. I, p. 1774).**

In exercise of the power conferred by section 73-A, sub-section (*2*) of the Bombay Land Revenue Code, 1879 (Bom. V of 1879), the Governor in Council is pleased to exempt from the operation of the said section all Brahmins and Banias (Wanis) holding lands in the villages of the Nandurbar Taluka (including the Navapur Petha) of the West Khandesh District to which the provisions of the said section were declared to be applicable by Government Notification in the Revenue Department, No. 1116-A, dated the 18th February 1902†.

S. 73-A (2). **G. N., R. D., No. 11559, dated 13th November 1908 (B. G., Pt. I, p. 1997).**

In exercise of the power conferred by section 73-A, sub-section (*2*) of the Bombay Land Revenue Code, 1879 (Bom. V of 1879), the Governor in Council is pleased to exempt from the operation of the said section all Brahmins and Banias (Wanis) holding lands in the villages of the Shirpur Taluka of the West Khandesh District, to which the provisions of the said section were declared to be applicable by Government Notification in the Revenue Department, No. 1116-B, dated the 18th February 1902††.

S. 73-A (2). **G. N., R. D., No. 3875, dated 22nd April 1909 (B. G., Pt. I, p. 662).**

Amended by G. N., R. D., No. 355, dated 11th January 1916.

In exercise of the power conferred by section 73-A, sub-section (*2*) of the Bombay Land Revenue Code, 1879 (Bom. V of 1879), the Governor in Council is pleased to exempt from the operation of the said section all Marwadis, Kshatris, Parbhus, Boris and Parsis holding lands in the villages of the Shirpur Taluka of the West Khandesh District to which the provisions of the said section were declared to be applicable by Government Notification in the Revenue Department, No. 1116-B, dated the 18th February 1902.††

* * * *

S. 98. **G. N., R. D., No. 6577, dated 15th August 1905 (B. G., Pt. I, p. 1043).**

In accordance with the provisions of section 98 of the Bombay Land Revenue Code, 1879 (Bom. V of 1879), and in supersession of Government Notification in the Revenue Department, dated the 6th October 1869 so far as the same applies

†Printed at page 25 *supra*.

††Printed at page 29 *supra*.

to the districts of the Central Division the Governor in Council is pleased to accord his sanction to the minimum area fixed in the scale hereto annexed by the Commissioner of Survey for survey numbers comprising land used for purposes of agriculture only in the said districts :—

Scale.

Class of land.	Minimum Area.	
	Acres.	Gunthas.
Dry-crop	1	0
Rice	0	10
Garden	0	10

G. N., R. D., No. 8071, dated 13th October 1896 (B. G., Pt. I, p. 1071). S. 98.

Under the provisions of section 98 of the Bombay Land Revenue Code, 1879, His Excellency the Governor in Council is pleased to fix the following scale for the regulation of sub-division of survey numbers in the above-ghat talukas of the Kanara District :—

	Acres.	Gunthas.
Dry-crop land	3	0
Rice land	1	0
Garden land	0	20

G. N., R. D., No. 6960, dated 21st September 1897 (B. G., Pt. I, p. 1652). S. 123.

His Excellency the Governor in Council is pleased to notify that the survey of the suburb of Madhavpura in the town of Dariapur-Kajipur, zilla Ahmedabad completed in or about the year 1852, is recognized by Government for the purposes of section 128, Land Revenue Code.

G. N., R. D., No. B. 205, dated 26th January 1921 (B. G., Pt. I, p. 377). Ss. 213 & 214. Land Revenue Rules (1921).

**Amended by G. N., R. D., No. 9138-B, dated 8th March 1937.*

Amended by G. N., R. D., No. 4578/33, dated 22nd May 1937.

Amended by G. N., R. D., No. 5887/33, dated 25th July 1938.

Amended by G. N., R. D., No. 284/24, dated 29th July 1938.

Amended by G. N., R. D., No. B-205, dated 19th October 1938.

Amended by G. N., R. D., No. 10025/28, dated 16th December 1938.

Amended by G. N., R. D., No. 5542/33, dated 24th January 1939.

Amended by G. N., R. D., No. 3783/33, dated 11th August 1939.

*Since the Land Revenue Rules were contained in the Manual published by Anderson, they were not published in extenso in the last edition of the Local Rules and Orders. Rules were corrected by Anderson upto 1935. Hence, a list only of the amending notifications issued since 1936 onwards has been given. There was no amending notification in 1936.

Amended by G. N., R. D., No. 1472/33, dated 31st August 1939.
Amended by G. N., R. D., No. 570/39, dated 27th September 1939.
Amended by G. N., R. D., No. 1586/39, dated 11th October 1939.
Amended by G. N., R. D., No. B-205, dated 27th November 1939.
Amended by G. N., R. D., No. 482/39, 2nd February 1940.
Amended by G. N., R. D., No. 1016/39, dated 5th March 1940.
Amended by G. N., R. D., No. 1016/39, dated 21st May 1940.
Amended by G. N., R. D., No. 9115/33, dated 24th July 1940.
Amended by G. N., R. D., No. 4872/33, dated 29th July 1940.
Amended by G. N., R. D., No. 4256, dated 7th August 1940.
Amended by G. N., R. D., No. 10106/33, dated 28th October 1940.
Amended by G. N., R. D., No. 5882-B, dated 6th November 1940.
Amended by G. N., R. D., No. 1016/39, dated 20th December 1940.
Amended by G. N., R. D., No. 2806, dated 25th February 1941.
Amended by G. N., R. D., No. 1834/24, dated 14th March 1941.
Amended by G. N., R. D., No. 1834/24-Corrigendum, dated 28th August 1941.
Amended by G. N., R. D., No. 1016/39, dated 15th September 1941.
Amended by G. N., R. D., No. 4536/39, dated 22nd December 1941.
Amended by G. N., R. D., No. 1672/39, dated 7th January 1942.
Amended by G. N., R. D., No. 7773-III, dated 24th March 1942.
Amended by G. N., R. D., No. 7241/33-III, dated 24th March 1942.
Amended by G. N., R. D., No. 8214/39, dated 3rd December 1942.
Amended by G. N., R. D., No. 2322/28, dated 28th February 1944.
Amended by G. N., R. D., No. 8566/39, dated 4th May 1944.
Amended by G. N., R. D., No. 6369/39, dated 6th June 1944.
Amended by G. N., R. D., No. 1016/39, dated 8th July 1944.
Amended by G. N., R. D., No. 6406/28, 19th September 1944.
Amended by G. N., R. D., No. 9394/39, dated 5th October 1944.
Amended by G. N., R. D., No. 7302/39, dated 18th December 1944.
Amended by G. N., R. D., No. 8557/33, dated 29th May 1945.
Amended by G. N., R. D., No. 1016/39, dated 2nd April 1947.
Amended by G. N., R. D., No. 3783/33, dated 16th September 1947.
Amended by G. N., R. D., No. 7003/35, dated 12th April 1948.
Amended by G. N., R. D., No. 2596/45, dated 29th April 1948.

In exercise of the powers conferred by sections 213 and 214 of the Bombay Land Revenue Code, 1879 (Bombay V of 1879), and of all other powers enabling him in this behalf, and in supersession of Government Notifications in the Revenue Department No. 7368, dated the 6th December 1881, No. 8356, dated the 27th November 1903, No. 5223, dated the 28th June 1905, and No. 5641 dated the 5th June 1907, and all notifications amending the same, the Governor in Council is pleased to make the following rules :—

CHAPTER I.

Introductory.

1. *Short title.*—These rules may be called the Land Revenue Rules, (1921).

2. *Interpretation.*—In these rules, unless there is anything repugnant in the subject or context,

(*a*) "Chapter" and "Section" mean a chapter and a section of that Code.

(*b*) "Mamlatdar" includes Mahalkari.

(*c*) "Public Document" has the same meaning as in section 74 of the Indian Evidence Act, 1 of 1872.

*CHAPTER II.

(Administrative Orders only.)

CHAPTER III.

Revenue Surveys.

Survey of Agricultural Land and Survey and Assessment of Non-Agricultural Land.

3. *Survey numbers and sub-divisions.*—(1) Every holding not less in area than the minimum fixed under section 98 shall be separately measured, classified, assessed and defined by boundary marks, and entered in the land records as a survey number.

(2) Every holding of which the area is less than such minimum shall be separately measured, classified and assessed and entered in the land records as a sub-division of that survey number in which it is directed to be comprised ; it may also be separately demarcated if the Commissioner of Survey so directs, provided that the said Commissioner may require the persons interested in such holding to prepay the costs, or such portion of the costs as he thinks fit, of so defining the holding.

4. *Record of measurements.*—All measurements shall be recorded in a book or embodied in a plane table map kept in such form as shall be prescribed by the Commissioner of Survey for each survey. The said books or maps shall be preserved as a record of the survey.

5. *Test of measurements.*—The original measurements made by the subordinate survey officers employed for the purpose shall be tested by the officers in charge of measuring establishments in such manner and to such extent as the Commissioner of Survey shall deem sufficient.

6. *Village maps.*—Village maps shall be prepared under the orders of the Commissioner of Survey showing each survey number and its boundary marks.

7. *Classification of land.*—For the purposes of assessment all lands shall be classed with respect to its productive qualities. The number of classes and their relative value reckoned in annas shall be fixed under the orders of the Commissioner of Survey with reference to the circumstances of the different tracts of country to which the survey extends and to the nature of the cultivation.

*Not printed.

8. *Field-books.*—Every classer shall keep a field-book and record therein the particulars of his classification of each survey number and sub-division and the reasons which led him to place it in the particular class to which in his estimation it should be deemed to belong. Such field-books shall be preserved as permanent records of the survey.

9. *Test of classification.*—A test of the original classification made by the subordinate officers employed for this purpose shall be taken by the officers in charge of classing establishments, in such manner and to such extent as may be directed by the Commissioner of Survey.

10. *Deleted.*

10-A. *Deleted.*

11. *Amalgamation.*—Any survey number or sub-division of a survey number may be amalgamated with any other coterminous survey number with the sanction of the Collector and upon the application of the holder, whenever all the parcels of land proposed for amalgamation are held by the same holder upon the same tenure.

(2) Any sub-division may be amalgamated without prior sanction with any coterminous sub-division of the same survey number held by the same holder upon the same tenure.

(3) When such amalgamation is effected, the two or more portions of land shall become one entry in the land records, bearing the same distinguishing number as the first in series of the amalgamated numbers. Any boundary marks placed between the amalgamated holdings shall be removed and the village map corrected accordingly.

12. (1) *Application of rules 3* to *11.*—Rules 3 to 11, unless otherwise directed by the State Government, shall be observed in the conduct of revenue surveys of lands used, or which may be used, for the purposes of agriculture.

(2) *Form and details.*—Matters of detail not provided for in the foregoing rules shall be determined in each survey in accordance with such general or special orders as the Commissioner of Survey, acting under the general control of the State Government may, from time to time, issue.

Survey and Assessment of non-agricultural land.

13. (1) *Non-agricultural land not to be classified in accordance with foregoing rules.*—Land of any of the kinds specified in sub-rule (2) shall be measured and mapped in accordance with rules 3 to 6 inclusive, but shall not be classified or assessed in accordance with rules 7 to 10.

(2) The lands referred to in sub-rule (1) are the following :—

(*a*) occupied unalienated lands, which are situated within an area in which a survey under rules 3 to 11 is in progress and which are used forany non-agricultural purposes ;

(*b*) unoccupied unalienated lands, situated within any such area, which are deemed to be likely to be more in demand for building or industrial purposes than for agriculture ; and

(*c*) all lands to which a survey is extended under section 131.

14. *Assessment of non-agricultural land.*—The Collector on receipt of a schedule of the lands referred to in rule 13 (2) shall assess them at the same rates and for the same period as if he were altering an agricultural assessment under whichever of Rules 81 to 85 has been applied to the locality.

Provided that land wholly or partially exempt from assessment under the proviso to section 52 or under section 128 or otherwise shall not, so far as it is so exempt, be assessed.

And also provided that land held under unexpired leases shall become liable to the rate of assessment in force for the locality only upon the expiry of those leases.

14-A (1). All non-agricultural assessments, rents and fines leviable under rules 43, 43-A, 43-B, 47, 51, 80—83, 90, 92, 93, and 99—103 shall be calculated out to the nearest pie at the rate (per acre or otherwise) sanctioned upon the area chargeable; but any sum so calculated that—

(*i*) is less than two annas, shall be raised to 2 annas;

(*ii*) exceeds two annas, and is not an exact multiple of two annas, shall be rounded off, upwards or downwards, and when equidistant upwards, to the nearest multiple of two annas—*e.g.*,

an assessment (fine or rent) of one anna and 3 pies will be charged as two annas;

an assessment (fine or rent) of two annas and 11 pies will be charged as two annas;

an assessment (fine or rent) of 3 annas will be charged as four annas;

an assessment (fine or rent) of Rs. 8-9-5 will be charged as Rs. 8-10-0;

an assessment (fine or rent) of Rs. 8-10-7 will be charged as Rs. 8-10-0;

an assessment (fine or rent) of Rs. 8-11-0 will be charged as Rs. 8-12-0.

15. *Maintenance of records.*—For all lands which have in the past been surveyed or assessed, or which shall be hereafter surveyed or settled under the provisions of the Code and these rules, it shall be the duty of the Director of Land Records—

(1) to cause to be corrected any arithmetical or clerical error whenever discovered;

(2) to cause to be incorporated punctually in the land records all changes in boundaries, areas, tenures and assessments either of survey numbers or of their sub-divisions which are made under orders of competent authority as defined in the Code and these rules or any other Act:

Provided that where the assessment of any survey number has been fixed by a declaration under section 102, such assessment shall not be raised upon the discovery of any mistake in classification until the term of such declaration expires.

16. Detailed instructions and forms shall be drawn up and maintained by the Director of Land Records, subject to the orders and approval of the State Government from time to time for the proper carrying out of Rule 15.

Introduction of Settlements of Land Revenue.

17. *Deleted.*

18. *Deleted.*

Survey Fees in Towns and Cities.

19. *Survey fees in towns and cities.*—(1) Where a survey is extended to the site of a town or city, the survey fees payable under section 132 shall ordinarily be so

fixed that the total sum payable in respect of such site shall cover the cost of the survey and preparation of the Record of Rights thereof.

(2) In fixing the fees for each building site or any portion thereof held separately the Collector shall have regard to the provision of sub-rule (1) and to the position, value (or rental), and area of such building site or portion thereof, but such fee shall not exceed ten rupees.

CHAPTER III-A.

Settlement and Assessment of Agricultural land.

19-A. *Enquiry by the Settlement Officer.*—(1) In making a settlement in respect of agricultural lands in any area, the Settlement Officer shall hold an enquiry in the manner prescribed in sub-rule (2).

(2) The Settlement Officer shall examine fully the past revenue history of the area and assess the general effect of the incidence of assessment on the economic condition of the area. He shall collect information relating to the area in respect of the following matters and in the following manner:

(*i*) *Physical configuration.*—The Settlement Officer shall base the information on observations made by him personally;

(*ii*) *Climate and rainfall.*—The Settlement Officer shall base the information as regards climate on personal observations made by him and by making local enquiries in the area. He shall collect statistics of rainfall for the years subsequent to the introduction of the last settlement from the Director of Agriculture and compile the same in Form A. He shall also collect information regarding the seasonal conditions of the area from the Director of Agriculture and verify it by reference to the Land Revenue Administration Reports or other reports relating to the area issued by Government. The information under this clause may be collected only for ten years immediately preceding the year of enquiry if in the opinion of the settlement officer it is sufficient to exhibit the normal seasonal conditions of the area;

(*iii*) *Markets.*—The Settlement Officer shall base the information on personal observations made by him;

(*iv*) *Communications.*—The Settlement Officer shall base the formation on personal observations made by him;

(*v*) *Standard of husbandry.*—The Settlement Officer shall base the information on personal observations made by him;

(*vi*) *Population and supply of labour.*—The Settlement Officer shall obtain figures of population according to occupation from the Director of Agriculture and compile them in Form A-1. He shall ascertain the conditions as regards supply of labour in each group in the area by making enquiries in such villages as he may select, with the previous sanction of the Settlement Commissioner. The number of villages so selected shall not be less than 50 per cent. of the total number of villages in the area;

(*vii*) *Agricultural resources.*—The Settlement Officer shall obtain information regarding figures of livestock, agricultural implements and other agricultural resources from the Mamlatdar and compile it in Form A-2;

(*viii*) *The variations in the area of occupied and cultivated lands during the last 30 years.*—The Settlement Officer shall obtain information in respect of this matter from the Mamlatdar and shall compile it in Forms A-3 and A-4 ;

(*ix*) *Wages.*—The settlement officer shall obtain the necessary information from the Mamlatdar and verify the information about wages current during the year of enquiry from personal observation. He shall compile the information in Form A-5 ;

(*x*) *Prices.*—The information about the prices of the principal articles of agricultural produce shall be obtained from the Director of Agriculture and compiled in Form A-6. The prices shall be wholesale prices expressed in rupees per maund of 3,200 tolas, if available, and retail prices expressed in seers of 80 tolas per rupee and, where more than one quality of any produce is grown, shall be the prices of the variety specified by Government. The principal articles of agricultural produce shall be those defined in rule 19-1 ;

(*xi*) *Yield of the principal crops.*—The Settlement Officer shall collect the information from the Collector and the Director of Agriculture regarding crop experiments, the results of which have been recorded by them. The settlement officer shall also try to ascertain the normal yield per acre in each class of land by crop experiments or by examining the accounts of individual agriculturists ; and shall in all such cases record the classification value of the land the normal yield of which has been so ascertained by him ;

(*xii*) *Ordinary expenses of cultivating such crops.*—The information shall be collected in respect of the crop experiments referred to in clause (*xi*) or by examining the accounts of individual agriculturists. The result shall be recorded in the form of a statement of income and expenditure showing the net profit per acre ;

(*xiii*) *Rental values of lands used for the purposes of agriculture.*—The statistics about the rental values for the five years preceding the year of settlement shall be collected from the record of rights. The Settlement Officer shall examine the statistics of the villages selected by him under clause (*vi*) of this sub-rule and shall check the figures mentioned in the record of rights during his visit to the villages by verifying them from the parties concerned or by such other local inquiry as he considers suitable.

If in any case, the rent payable is a fixed amount of produce, the Settlement Officer shall work out its value in money. In cases in which the rent payable is a share of the gross produce (the Settlement Officer shall not take such cases into consideration if other reliable rental figures are available in reasonable numbers) the Settlement Officer shall ascertain the actual share of the produce received by the landlord, and determine its value in money. In all such cases in which the rent is paid in kind, the Settlement Officer shall ascertain and make deductions for the liabilities, if any, of the landlord, such as, his liability to meet a share of customary payments to village servants or for charitable purposes ; or to defray part of the cost of production such as the cost of seed or manure or weeding or irrigation.

In cases where rents are paid in cash the Settlement Officer shall not take into consideration (1) rents paid by tenants for lands which belonged to them but which they have mortgaged with possession or sold and taken back on lease, (2) rents due under leases between relations the real object of which is to provide maintenance to dependents, (3) rents due in respect of deteriorated or waste lands which have

to be reclaimed, (4) rents which are either too low as they are coupled with service or too high, the higher rent being paid on charitable grounds, and (5) rents due under all such leases as do not appear to be genuine.

The Settlement Officer shall also enquire and record whether deductions are made from the rent on account of expenses such as cost of seed or manure incurred by the landlord and whether the rents are paid in full and regularly. The statement of rental values shall be compiled in Form A-7 ; and

(*xiv*) *Sales of lands used for the purposes of agriculture.*—The Settlement Officer shall examine the statistics for the five years preceding the year of settlement, of the villages selected by him under clause (*vi*) of this sub-rule to enable him to come to fairly accurate conclusions regarding the development of land values in the area and its component groups. The Settlement Officer shall for this purpose exclude all sales which are not genuine, e.g. (*a*) sales which are conditional mortgages whereby the vendor becomes the tenant and pays interest and instalments of capital in the guise of rent, (*b*) sales for nominal value between relatives, (*c*) sales for nominal value to temples, (*d*) sales in satisfaction of debts to a sowcar, (*e*) sales of small pieces of agricultural land in the vicinity of residential areas. The statistics shall be compiled in Form A-8.

19-B. *Settlement Report.*—(1) The Settlement Officer shall incorporate the information collected by him in regard to the matters specified in sub-rule (2) of rule 19-A in his settlement report. The report shall contain the reasons for his proposals and a statement in Form A-9, showing the effect of his proposals as compared to that of the settlement then in force.

(2) The Settlement Officer shall send three copies of the report submitted by him to the Collector under sub-section (5) of section 117I to the Settlement Commissioner who shall arrange for its translation in the regional language of the villages concerned and have it printed.

19-C. *Report to be published in each village.*—The settlement report shall be published by the Collector in each village concerned in the regional language of such village by posting it along with the notice published under sub-section (2) of section 117J for three months in the chavdi or other prominent public place in such village and also at the taluka kacheri.

19-D. *Notice under section 117J* (2).—The notice under sub-section (2) of section 117J shall be published in Form A-10 by the Collector.

19-E. *Report to be forwarded to State Government.*—After the expiry of three months from the date of the notice published under sub-section (2) of section 117J, the Collector shall as soon as may be forward the settlement report and the petitions of objections, if any, received by him together with his remarks thereon to the Settlement Commissioner who shall send them with his own remarks to the Commissioner of the Division. The Commissioner shall then submit them to the State Government with his own remarks and recommendations.

19-F. (1) Any person desiring to move the State Government to refer the settlement report to the Bombay Revenue Tribunal under section 117KK of the Bombay Land Revenue Code, 1879, shall deposit Rs. 100 in the Government Treasury. He shall state in his application to the State Government his objections to the report and the grounds therefor.

(2) On receipt of such application and on the applicant depositing the amount prescribed in sub-rule (1), the State Government shall direct that the settlement report together with the application shall be sent to the Bombay Revenue Tribunal for enquiry.

(3) On receipt of the settlement report together with the application, the Bombay Revenue Tribunal may call for such further information as it deems necessary from the State Government or the applicant or any other person. The Bombay Revenue Tribunal shall then fix the date, place and time for holding the enquiry and give a notice of the same to the State Government and to the applicant.

(4) The State Government may be represented at the enquiry by such officer as may be authorised by it. The applicant shall be entitled to put in a written statement at the enquiry. No pleader, vakil or mukhtyar and no advocate or attorney of a High Court shall be entitled to appear on behalf of the applicant or the State Government at the enquiry except with the permission of the Bombay Revenue Tribunal.

(5) On the date fixed for holding an enquiry or on such date to which the enquiry may, from time to time, be adjourned, the Bombay Revenue Tribunal shall hear the applicant and the officer representing the State Government and make such further enquiry as it thinks fit.

(6) The Bombay Revenue Tribunal shall then submit to the State Government its opinion on the objections raised and on such other matters as may have been referred to it by the State Government. Such opinion shall be submitted within two months from the date of the reference made to the Tribunal by the State Government.

(7) When more than one application has been received in respect of a settlement report, pertaining to the same taluka or village, the Bombay Revenue Tribunal may, in its discretion, hold a joint enquiry in the matter.

(8) If the Revenue Tribunal's findings are entirely in favour of the applicant, the whole of the amount of the deposit shall be refunded to him. If his objections are only partially accepted such portion of the amount as may be recommended by the Revenue Tribunal shall be refunded to him. If his objections are rejected in entirety or found to be frivolous by the Revenue Tribunal he shall not be entitled to get any refund of his deposit.

19-G. *Notice of introduction of settlement.*—(1) The notice under section 117O shall be in Form A-11 and shall be published by the Collector in each village concerned in the regional language of such village by posting it in the chavdi or other prominent public place in such village and by beat of drum.

(2) Such notice shall also be published by the State Government in the *Official Gazette.*

19-GG. In any area in which the relative valuation of land as regards its soil, water and other advantages is recorded separately in the survey records, separate rates may be fixed in respect of each of those advantages of 16 annas value, and the standard rate in such cases shall be a combination of such separate rates :

Provided that where no such separate rates are fixed, the standard rate shall be the assessment per acre of land having the maximum valuation in respect of each of those advantages.

19-H. *Assessment of individual survey numbers and sub-divisions.*—(1) When standard rates of assessment have been sanctioned by the State Government, the assessment to be imposed on each survey number or sub-division shall be determined according to the relative classification value of the land comprised therein, in accordance with the tables of calculations prepared by the Settlement Commissioner.

(2) The assessment to be imposed on each survey number or sub-division after a revision settlement shall be worked out by increasing or decreasing the old assessment in the same proportion as there is an increase or decrease in the new standard rates over the old maximum or standard rates in respect of such lands :

Provided that if the classification value of the land comprised in such survey number or sub-division is changed, the assessment shall be calculated in accordance with the provisions of sub-rule (1).

19-HH. When the revised assessment on any survey number or sub-division thereof determined either under rule 19-H or otherwise exceeds the existing assessment levied on it by more than 25 per cent. in cases falling under sub-section (4) or (5) of section 117F of the Code such excess shall be recovered by stages of 25 per-cent. every two years ; that is to say, commencing with the year next following the year in which the settlement is introduced, the recovery of excess shall be subject to the limit of 25 per cent. over the existing assessment for the first two years, 50 per cent. for the next two years and so on, there being added to the limit an increase of 25 per cent. for every subsequent two years during the period of the settlement.

19-I. *Classes of agricultural produce and prices with reference to which settlement may be declared to have been made.*—(1) The agricultural produce with reference to the prices of which the settlement rates may be declared to have been fixed under sub-section (2) of section 117M shall include all crops which are grown on an area not less than 20 per cent. of the total gross cropped area in the taluka or part of the taluka in respect of which the settlement is to be made and such other crops as Government may specify owing to their money value.

(2) The prices of the classes of agricultural produce with reference to which the settlement rates may be declared to have been fixed under sub-section (2) of section 117M shall be the average of the wholesale prices if available, otherwise the retail prices, as recorded in Form A-6 for the five years immediately preceding the year in which enquiry is made under rule 19-A and shall be expressed in rupees per maund. These average prices shall be called the settlement prices.

19-J. *Record of prices to be kept.*—(1) The Mamlatdar shall ascertain each month the wholesale prices (in terms of rupees per maund) and retail prices (in seers of 80 tolas per rupee) of the classes of agricultural produce, with reference to which a settlement may be declared to have been made under sub-section (2) of section 117M, prevailing at the taluka headquarters and record them in a register which shall be carefully maintained. He shall also show in such register the average prices during the period from January to September of each year.

(2) The prices recorded in such register shall be published in the *Official Gazette*.

19-K. *Scale for granting rebate or levying surcharge.*—(1) For the purpose of the grant of a rebate or the levy of a surcharge on the assessment in any area the percentage increase or decrease of the average prices prevailing in the period January

to September of any year over the settlement prices shall be multiplied by the number of units, each of 100 acres, under each crop specified in sub-rule (1) of rule 19-I in the revenue year commencing on 1st August of that year :

Provided that in the case of other crops specified by Government owing to their money value, as provided in rule 19-I the area actually under each such crop shall before such multiplication be increased by 50 per cent. The sum of these products shall be divided by the total number of units, each of 100 acres, and the result shal be taken to the total percentage increase or decrease according as the sum of the products is *plus* or *minus*.

Illustration :—

—	*Crops.*				Remarks.
	Jowari.	Bajri.	Cotton.	Wheat.	
1. Settlement prices	4	3	6	5	
2. Average prices January to September in rupees per maund.	3	2–8	6–12	5–8	
3. Percentage increase or decrease.	—25	–16·7	+12·5	+10	
4. Area in units of 100 acres each under each crop including weightage for money crops.	40	30	15+ 7·5 =22·5	10+5 =15	Wheat and Cotton are money crops and 50 per cent. is added to the area actually cultivated.
5. Product of 3 & 4	—1000	—501	+281·25	+150	

Sum of 5= —1069·75.

Divided by the total number of units= $\frac{1069 \cdot 75}{40+30+22 \cdot 5+15}$.

Total percentage decrease=9·9.

(2) No rebate shall be granted or surcharge levied if the total percentage decrease or increase as calculated in sub-rule (1) is below 20 or 25 per cent. respectively. When the total percentage decrease or increase is 20 or 25 per

cent. respectively or above, rebate shall be granted or surcharge levied, as the case may be, in accordance with the following scale :—

Decrease.	*Rebate.*
From 20 per cent. to below 33 1/3 per cent. ...	... 2 annas in a rupee.
From 33 1/3 per cent. to below 40 per cent. ...	... 3 annas in a rupee.
From 40 per cent. to below 50 per cent. ...	... 4 annas in a rupee.
From 50 per cent. to below 75 per cent. ...	... 6 annas in a rupee.
75 per cent. and over	... 8 annas in a rupee.
Increase.	*Surcharge.*
From 25 per cent. to below 33 1/3 per cent. ...	... 2 annas in a rupee.
From 33 1/3 per cent. to below 40 per cent. ...	... 3 annas in a rupee.
From 40 per cent. to below 66 2/3 per cent. ...	... 4 annas in a rupee.
From 66 2/3 per cent. to below 80 per cent. ...	... 6 annas in a rupee.
80 per cent. and over	... 8 annas in a rupee.

19-L. *Rebate or surcharge to be on actual demand for the year.*—The rebate shall be granted or surcharge levied on the actual demand due for collection during the year after allowing for the suspensions or remissions granted during the year on consideration of the annewari of crops in the village:

Provided that the surcharge levied in any year shll not be more than annas 4 in a rupee over the assessment including the sucharge levied in the previous year whatever the rise in prices may be.

Illustration.—If a surcharge of annas 2 a rupees was levied in the year 1943-44 and the prices to be considered for the year 1944-45 have risen by more than 80 per cent., the surcharge to be levied will not be annas 8 in the rupee but only annas 6 in the rupee, i.e., annas 4 in the rupee above the levy of the year 1943-44

19-M. *Assessment how to becalculated.*—All agricultural assessments (or judi) shall be calculated to the nearest pie at the rate (per acre or otherwise) sanctioned upon the area chargeable and rounded off in the following manner. When the assessment (or judi)—

(*a*) *does not exceed one rupee,* the nearest half anna shall be taken neglecting 3 pies and under and counting 4 pies and 5 pies as 6 pies, in case of all districts, except the Konkan and below-ghat talukas of Kanara where the nearest 3 pies shall be charged. For example, in the Thana, Kolaba and Ratnagiri districts and the below-ghat talukas of Kanara—

an assessment of Re. 0-10-4	shall be taken as Re. 0-10-3 ;
an assessment of Re. 0-10-5	shall be taken as Re. 0-10-6 ;
an assessment of Re. 0-0-2	shall be taken as Re. 0-0-3.

Elsewhere.

an assessment of Re. 0-8-3	shall be taken ans Re. 0-8-0 ;
an assessment of Re. 0-9-4	shall be taken as Re. 0-9-6.

(*b*) *exceeds one rupee,* the nearest anna shall be taken in all cases neglecting 6 pies and under and counting 7 to 11 pies as one anna, for example—

an assessment of Rs. 1-3-6	shall be taken as Rs. 1-3-0 ;
an assessment of Rs. 1-3-7	shall be taken as Rs. 1-4-0 :

Provided that—

(1) when the calculation results in the sum total of the new assessments (or judi) of all sub-divisions of a survey number being greater or less than the whole assessment (or judi) of that number, the difference shall be equitably distributed over the sub-divisions by deduction or addition in the largest shares, so as to make the total equal to the assessment (or judi) on the survey number ;

(2) subject to proviso (1), the assessment of a sub-division shall in no case be less than a pie and every fraction of a pie shall be considered as one pie, the addition being counter balanced by deduction in the assessment of any of the other sub-divisions of the same survey number in an equitable manner ;

(3) no new assessment (or judi) on a survey number or sub-division of a survey number shall be less than 3 pies in the Thana, Kolaba and Ratnagiri Districts, and in the below-ghat talukas of the Kanara District or less than 6 pies elsewhere, but this provision shall be subject to the condition that the total of the assessments of all the sub-divisions of a survey numbr shall not exceed the assessment (or judi) of that survey number. Where this condition cannot be fulfilled any assessment of less than 3 pies or 6 pies, as the case may be, may be retained subject to proviso (2).

CHAPTER IV.

Sub-Division of Survey Numbers.

20. *Notices to be issued.*—Before field operations a notice shall be issued by the Mamlatdar and posted in the village chavdi and proclaimed by beat of drum, stating that the sub-divisions of survey numbers in the village are about to be measured according as they have been divided by the holders, and daily notices shall be given as far as possible specifying the numbers or parts of numbers which are to be measured next day and warning landholders to be present.

21. *Boundries to be laid down.*—(1) When there is no dispute the boundary of each sub-division shall be laid down according to the statements of the holders.

(2) Where there is any dispute, the boundary to which the dispute relates shall be measured and mapped in accordance with the claims of both disputants, and the dispute entered in the register of disputed cases. After the dispute has been settled under sections 37 and 119-120, or Rule 108, as the case may be, the map shall be corrected accordingly and the areas finally entered into the land records.

22. *Fees.*—The fees to be recovered for making sub-divisions in cases to which section 135G(*b*) applies shall, unless the State Government in any case otherwise direct, be such as will cover the entire cost of measuring, assessing and mapping the sub-division ; they shall be assessed by the Collector.

22-A. *Deleted.*

23. *Assessment.*—The proportionate assessment of sub-divisions to the land revenue settled upon the survey number shall be calculated subject to the proviso to section 117A (2) according to the relative classification value of the several parts of the survey number as directed in rule 10. Detailed instructions shall be prescribed by the Commissioner of Survey subject to the approval of the State Government, and may provide for the rounding off of fractions of annas.

CHAPTER V.

Boundary Marks.

24. *Details of boundary marks to be furnished by the Survey Department to the Collector.*—On the introduction of a Survey Settlement, the Superintendent of Survey shall furnish the Collector with a map and statements showing the position and description of the boundary marks erected or prescribed by or under the orders of the Commissioner of Survey. It shall be the duty of the Director of Land Records to amend these maps in accordance with any subsequent alteration of boundaries, in a revision survey or in the sub-division of a survey number or on any other authorised occasion.

25. The following boundary marks are authorized :—

Continuous marks—

(1) A boundary strip.

(2) Sarbandhs or hedges and other permanent continuous structures, such as walls.

Discontinuous marks—

(3) Conical earthen mounds or cairns (*buruz*) of loose stones.

(4) Pillars of cut stone, or brick or rubble-stones masonry.

(5) Prismatic or rectangular earthen mounds.

(6) Roughly dressed long stones.

(7) Any other marks found suitable for special localities and sanctioned by the Collector or Survey Officer, such as teak posts in the marine marshes on the Gujarat coasts.

26. *Maintenance of boundary strips.*—(1) Boundary strips or ridges shall not be ploughed up or otherwise injured by cultivation.

(2) The minimum width of boundary strips shall be as follows :—

(*a*) in dry crop lands	1½ feet.
(*b*) in rice and garden lands	9 inches.

Provided that—

(*i*) where the boundaries of such lands are well defined by banks, hedges, or the like, the actual width of the strip covered by such bank, hedge, or the like, shall be sufficient for the purpose of this rule ;

(*ii*) where the boundary of a survey number also forms the boundary of a Part B State or Foreign State, the minimum width prescribed above shall be maintained for the portion of the boundary strip on the side of the State of Bombay ; and

(*iii*) where village boundaries have been defined at the time of survey by double lines of boundary marks, the whole of the intermediate strip shall be maintained as a boundary strip.

27. *What boundary marks to be considered out of repair and how to be repaired.*—The following boundary marks shall be considered out of repair and shall be repaired in the manner prescribed for each kind as follows :—

(*a*) A continuous mark (strip, sarbandh, hedge, etc.), if it deviates more than three feet from the true straight line of the boundary. *Mode of repair*—either the deviation shall be rectified or the continuous mark not being a boundary strip must be replaced or supplemented by discontinuous marks.

(*b*) Any conical mound or cairn less than 2⅓ feet in height and 6 feet in diameter at the base. *Mode of repair*—raise it to 3 feet in height and 6 feet in width at the base.

(*c*) Any rectangular mound less than 2 feet high, or less than 5 feet long and 4 feet wide at the base. *Mode of repair*—the mound shall be raised to full dimensions, that is 2½ feet high, 6 feet long and 5 feet wide at the base.

(*d*) Any mound, conical or rectangular, within 4 feet of which earth has been dug for repairs, when such excavation has affected the stability of the mark or allows water to lodge. *Mode of repair*—the excavation shall be filled up.

(*e*) Any pillar (*i*) less than 1 foot square or 2¼ feet in depth, (*ii*) broken down, or (*iii*) rising less than 4 or more than 9 inches clear above the adjacent ground level. *Mode of repair*—(*i*) replace by one of proper dimensions, (*ii*) rebuild, (*iii*) raise the pillar or clear away or make up the ground.

(*f*) Any stone less than 2 feet long and 6 inches thick. *Mode of repair*—a stone of proper size shall be substituted.

(*g*) Any stone out of the ground, or buried less than two-thirds of its length and loose. *Mode of repair*—the stone shall be replaced or fixed firmly.

(*h*) Any mark considerably out of proper position or so repaired or erected as to indicate a materially incorrect line of boundary. *Mode of repair*—the mark shall be correctly placed.

(*i*) Any mark overgrown or surrounded by vegetation of any kind so as not to be easily visible. *Mode of repair*—the vegetation shall be cleared away until the mark is easily visible.

(*j*) Any sarbandh, or continuous embankment less than 2 feet high and 4 feet wide at the bottom. *Mode of repair*—the sarbandh shall be made full 2 feet high and 4 feet wise at the bottom throughout, unless the occupant prefers the substitution of authorized discontinuous marks.

(*k*) Any hedge or other continuous mark which by reason of want of continuity or disrepair fails to define the boundary. *Mode of repair*—the necessary renewals shall be made or other authorised marks substituted.

(*l*) Any boundary strip or ridge which has been ploughed up or otherwise obliterated or the dimensions of which are less than those prescribed by Rule 26. *Mode of repair*—the landholder shall be ordered to restore the strip or ridge within a prescribed period by leaving it unploughed and undisturbed ; on his failure to comply he may be prosecuted under section 125.

(*m*) Missing marks. *Mode of repair*—new marks shall be erected.

Proviso as to marks liable to injury from flooding.—Provided that in any case where a boundary mark cannot, owing to flooding of a nala, or river, the breaking away of the bank, or other causes, be kept in repair, another kind of authorised mark may be substituted. Where even that is impracticable the direction of the boundary must be fixed by a pair of discontinuous marks erected at an adequate distance back from the abandoned position ; either both on the same side, or one on each opposite side thereof.

28. *Determination of responsibility for maintenance.*—(1) The responsibility of the several landholders for boundary marks on a common boundary lies on the holder of the survey number which is numerically lowest.

(2) Sub-rule (1) is subject to the proviso that when any survey number is unoccupied or assigned for public or Government purposes the responsibility for repair of the marks on its periphery will pass to the landholder on the other side of the boundary. Repairs will be made at Government expenses only when the marks in disrepair lie between survey numbers each of which has no holder except the State Government.

(3) Within each survey number the holder or holders of each sub-division are responsible for the marks if any have been prescribed on the periphery of that sub-division to the same extent as they would be responsible if 'sub-division' were read instead of 'survey number' in sub-rules (1) and (2).

(4) A mark which is on the common boundary of two or more villages must be repaired by the holder of the land in the vil age which is under restoration when the marks are found out of repair.

CHAPTER VI.

Enquiries under section 37.

29. (1) *Notice of enquiry.*—(*a*) Before an enquiry under section 37 a written notice in form B of the proposed enquiry and of the time and place and subject-matter thereof shall be affixed not less than ten days before the enquiry at the chavdi or some other public place in the village in which the property is situate ; and in a conspicuous position upon the property with respect to which the inquiry will be held.

(*b*) A copy of the notice shall also be served not less than ten days before the enquiry on all persons who are known or believed to have made any claim to the subject-matter of the enquiry, and every such notice shall be served in the manner provided in section 190 for the service of a summons.

(2) *Notice of decision.*—(*a*) Written notice in form C of any order passed under section 37, specifying briefly the subject-matter, contents and date of the order passed, shal be served in the manner specified in clause (*b*) of sub-rule (1) upon the persons referred to in that clause.

(*b*) Such written notice shall also be affixed in the places specified in clause (*a*) of sub-rule (1).

CHAPTER VII.

The Disposal of Land Vesting in Government and Exemptions from Land Revenue.

30. (*a*) The right of Government to mines and mineral products which is reserved by section 69 shall not be disposed of without the sanction of the State Government, and in all grants of land the right to mines and mineral products and full liberty of access for the purpose of working and searching for the same shall be deemed to be reserved unless the State Government direct to the contrary and unless such right and liberty are expressly granted.

(*b*) No land situate within port limits shall be disposed of without the written concurrence of the Collector of Salt Revenue and without the reservation as to the tree-growth provided for in rule 58 (*d*).

(*c*) In all grants and disposals of land the right of occupation and use only subject to the provisions of the Code shall be granted: and not the proprietary right of Government in the soil itself.

31. Land may not be granted free of land revenue without the sanction of the State Government except as hereinafter provided.

Gifts of the possession and the revenue.

32. *Limits of revenue-free grants for different purposes.*—(1) Land may be given free of price and free of revenue, whether in perpetuity or for a term for any of the purposes mentioned below from which no profit is expected by the authorities and to the extent specified in this table:—

Purpose.	Estimated revenue-free value.	
	By the Commissioner.	By the Collector.
	Rs.	Rs.
(1) For sites for the construction at the cost of a local, municipal, or village fund or a fund of a sanitary committee or sanitary board of — (*a*) schools or colleges. (*b*) hospitals. (*c*) dispensaries, and (*d*) other public works	5,000	500
(2) For sites for the construction at the cost of a fund other than those specified in sub-clause (1) of any of the works referred to in sub-clause (1) above	500	50

Proviso as to land near railway stations.—Provided that the land in the neighbourhood of railway stations shall not be granted for dharmashalas under head (2) in the table unless when erected they are to be in the charge of the Local Board, Municipality, Village Panchayat, Sanitary Committee, or Sanitary Board concerned.

Provided further that land shall not be given under this rule for any of the purposes mentioned in rule 32-A.

(2) Such gifts shall ordinarily be made in form D.

32-A. Land may be leased at a nominal rent of Re. 1 a year for playgrounds or other recreational purposes to educational institutions or local bodies or for Gymnasiums recognised by Government for a term not exceeding fifteen years by the Collector when the revenue-free value of the land does not exceed Rs. 500 and by the Commissioner when the revenue-free value of the land does not exceed Rs. 5,000.

Such leases shall ordinarily be executed in form DD. The Commissioner or the Collector with the approval of the Commissioner, as the case may be, may make such variations in the conditions of the lease or annex such additional conditions as he may deem necessary.

33. When it is clear that such a sale is preferable to any other course on grounds of obvious convenience to Government no less than to the parties concerned, any land wherever situated of which the estimated revenue-free value does not exceed rupees one hundred may be sold revenue-free by the Collector to a private person for a private purpose.

Gifts of the possession only.

34. *Grants in the Dharwar District to shetsanadis for remuneration.*—(1) In the district of Dharwar whenever unoccupied land is available for the purpose, the Collector may give such land to any shetsanadi who is willing to accept remission at the rate of one rupee of the assessment in exchange for two rupees of the usual annual cash remuneration :

Provided that no such land shall be given if the estimated occupancy value thereof exceeds five hundred rupees.

(2) Where a grant is made under this rule no sanad need be issued to the grantee, but it is to be a condition of his tenure that the land is granted revenue-free to the agreed extent only in consideration of the shetsanadi's service, and that it is resumable at the pleasure of the State Government.

Gift of the revenue only.

35. (1) The Collector may exempt from payment of land revenue without any limit lands used for sites of hospitals, dispensaries, schools and for other public purposes, so long as such lands are used for such purposes and yield no profit to private individuals or local bodies.

(2) Lands used for sites of buildings solely devoted to charitable purposes may be exempted from payment of land revenue by the authorities and to the extent specified below, so long as such lands are used for such purposes and yield no profit to private individuals or local bodies :—

By the Collector—upto an annual amount of Rs. 10.

By the Commissioner—upto an annual amount of Rs. 50.

(3) Such exemptions shall ordinarily be made in form E.

(4) Exemptions from payment of land revenue granted before 6th October 1937 in respect of any land used for or dedicated to religious purposes shall remain in force for the period specified in the grant and may thereafter be continued in whole or in part, according to the discretion of the Collector.

Conditions attached to grants under foregoing rules.

36. *Conditions attached to grants under rules 32, 34 or 35.*—(1) Every grant under rule 32 or 34 shall be made expressly on the following conditions in addition to any others that may be prescribed in particular cases, namely:—

(*a*) That the land with all fixtures and structures thereon shall be liable to be resumed by the State Government if not used for the specific purpose or purposes for which it is granted by such date as the Collector may fix in this behalf or if used for any purpose other than the specific purpose or purposes for which it is granted, or if required by the State Government for any public purpose, and that a declaration under the signature of the Commissioner that the land is so required shall, as between the grantee and the State Government, be conculsive;

(*b*) that, if the land is at any time resumed by the State Government under condition (*a*), the compensation payable therefor shall not exceed the amount (if any) paid to the State Government for the grant, together with the cost or value at the time of resumption, whichever is less, of any building or other works authorizedly erected or executed on the land by the grantee.

(2) Where exemption from revenue is granted under rule 35 on land already occupied by the grantee, the following condition shall be imposed, in addition to any others that may be settled in particular cases, namely, that, if the Collector is satisfied that the land is used for any purpose other than the specific purpose or purposes for which exemption is granted, or yields profit to the grantee, it shall, in addition to the assessment to which it becomes liable under section 48, become liable to such fine as may be fixed in this behalf by the Collector under the provisions of section 66, as if the land having been assessed or held for the purpose of agriculture only had been unauthorizedly used for any purpose unconnected with agriculture.

Grant of land for agricultural purposes.

37. *Survey numbers how to be disposed of.*—(1) Any unoccupied survey number not assigned for any special purpose may, at the Collector's discretion, be granted for agricultural purposes to such person as the Collector deems fit, either upon payment of a price fixed by the Collector, or without charge, or may be put up to public auction and sold subject to his confirmation to the highest bidder.

(2) In the case of such grants an agreement in Form F shall ordinarily be taken from the person intending to become the occupant.

(3) When the land is granted on inalienable tenure the clause specified in Form I shall be added to the agreement.

(4) When the land is granted on impartible tenure an agreement in Form F (1), and, when it is also granted on inalienable tenure, an agreement in Form I (1), shall ordinarily be taken from the person intending to become the occupant.

(5) The declaration below the agreement shall be subscribed by at least one respectable witness and by the patel and village accountant of the village in which the land is situate.

38. *Survey number not already assessed to be assessed before it is disposed of.*—Where any survey number disposed of under rule 37 has not already been assessed, it shall be assessed by the Collector (after reference to the Superintendent of Land

Records) at the rates placed on similar soils in the same or neighbouring villages; and the assessment so fixed shal hold good for the period for which the current settlement for the v llage in which the land is s tuated has been guaranteed, and shall be liable thereafter to revision at every general settlement of the said village.

39. *Where survey numbers may be given at reduced assessment.*—Where it appears that the bring ng of any survey number under cultivation or its reclamation for other purposes will be attended with large expense, or where for other special reasons it seems desirable, it shall be lawful for the Collector (with the previous sanction of the Commissioner, in cases where *the assessment* on the and included in the total grant exceeds one hundred rupees) to grant the survey number revenue-free or at a reduced assessment for a certain term, or revenue-free for a certain term and at a reduced assessment for a further term, and to annex such special conditions as the outlay or other reasons aforesaid may seem to him to warrant, and to cancel the grant or levy full assessment on breach of these conditions :

Provided that, on the expiry of the said term or terms, the survey number shall be iable to full assessment under the rules then in force for lands to which a settlement for agricultural use has been extended or which are assessed for other uses.

(2) Form GI may generally be used in cases under this rule.

40. *Grants of salt-marsh lands for reclamations.*—Salt land or land occasionally overflowed by salt-water, which is not required or l kely to be required for salt manufacture, may, after consultation with the Commissioner of Salt, be leased for purposes of reclamation by the Co lector, on the following maximum terms, and with such modifications in particular cases as may be deemed fit :—

(*a*) no rent shall be charged for the first ten years ;

(*b*) rent at the rate of four annas per acre shall be levied for the next twenty years on the whole area leased, whether reclaimed or not ;

(*c*) after the expiry of 30 years the lease shall be continued in the case of reclaimed lands at the rate at which they would be assessed to land revenue from time to time if they were subjected to survey settlement ; and in the case of unreclaimed lands, if any, at the average rate of the reclaimed lands ;

(*d*) any portion of the land used for public roads shal be exempt from the payment of rent ;

(*e*) if the reclamation is not carried on with due diligence within two years, or if half the area is not reclaimed so as to be in a state fit for use for agricultural purposes at the end of ten years, and the whole at the end of twenty years, or if any land once reclaimed as aforesaid is not maintained in a state fit for use for agricultural purposes, the lease shall be liable to cancellation at the discretion of the Collector :

Provided that the lessee shall be at liberty during the first ten years to relinquish any area which he cannot rec aim.

(*f*) if the land reclaimed is used for any non-agricultural purpose, its rent shall be liable to be revised according to the rates under whichever of rules 81 to 85 has been applied to the locality notwithstanding that any of the periods specified above may not have expired ;

(*g*) Form G2 may generally be used in cases under this rule.

41. *Land in beds of river.*—Land situated in the bed of a river and not included in a survey number shall, save as otherwise provided in sections 46 and 64, ordinarily be leased annually by auction to the highest bidder for the term of one year or such

further period as the Collector thinks fit. The accepted bid shall be deemed to be the land revenue chargeable on such land.

Grant of land for non-agricultural purposes.

42. *Disposal of land for building and other purposes.*—Unoccupied land required or suitable for building sites or other non-agricultural purpose shall ordinarily be sold after being laid out in suitable plots by auction to the highest bidder whenever the Collector is of opinion that there is a demand for land for any such purpose; but the Collector may, in his discretion, dispose of such land by private arrangement, either upon payment of a price fixed by him, or without charge, as he deems fit.

43. *Conditions of grants for building.*—(1) Save in special cases in which the Collector with the sanction of the State Government otherwise directs, or in localities falling under rule 44, land for building sites shall be granted in accordance with the following provisions:—

(*a*) The land shall be granted in perpetuity subject to the provisions of the first paragraph of section 68, and shall be transferable.

(*b*) Where the land has already been assessed for agriculture, the assessment shall be altered under whichever of rules 81 to 85 has been applied to the locality.

(*c*) Where the land has not been assessed the Collector shall fix the assessment in accordance with the principles laid down for alteration of assessment in rules 81 to 86 and the provisions of the said rules shall as far as may be, apply.

(*d*) All such assessments shall be fixed for the period specified in Rule 87 (*a*) and may be commuted when they do not exceed one rupee in accordance with the provisions of rule 88.

(2) In the case of such grants an agreement in Form F or Form H, as the Collector may deem fit, shall ordinarily be taken from the person intending to become an occupant, and in the case of land in development schemes undertaken by the State Government in any district or, in special cases, an agreement in Form HH shall be taken. In the case of grants in which an agreement in Form H or Form HH is to be taken, the Collector may, subject to any general or special orders of the Commissioner, annex such additional conditions to, or omit, or vary such of the conditions in the agreement as he thinks fit.

(3) When the land is granted on inalienable tenure, the clause specified in Form I shall be added to the agreement.

(4) The declaration below the agreement shall be subscribed by at least one respectable witness and by the patel and village accountant of the village in which the land is situate.

43-A. *Terms on which land intended for future building sites may be temporarily disposed of.*—Unoccupied lands which are eventually intended for building sites within the Bombay Suburban District or any other area, to which the State Government may by notification in the *Bombay Government Gazette*, extend this rule but of which the immediate disposal for the said purpose appears to the Collector to be undesirable, may be let under written leases in a form approved by the State Government for short terms not exceeding in any case seven years at a ground rent equal to double the standard rate of non-agricultural assessment in force in the locality, or at a ground rent which may in special cases or localities be fixed with the sanction of the Commissioner.

43-B. *Disposal of small strips of land adjacent to occupied unalienated building sites.*—When any small strip of land vesting in Government adjacent to an occupied unalienated building site cannot reasonably be disposed of as a separate site, the Collector may, notwithstanding anything to the contrary contained in any of the rules in this Chapter, grant such strip to the holder of the said site on the same tenure on which he holds the said site if he agrees to pay—

(*a*) assessment or rent, as the case may be, for such strip of land at the same rate, if any, at which he pays assessment or rent for the said site, and

(*b*) such price or premium as the Collector deems adequate having regard to the situation of such strip and any other advantages which are likely to accrue to the holder on account of its disposal to him.

44. *In hill stations.*—In hill stations and such other localities as the State Government may direct land shall not be granted for building except on such conditions as are considered desirable regarding the style of building, the period for construction and the observance of municipal or sanitary regulations. Such conditions should be embodied in the instrument (Form H).

45. *Establishment of entirely new village site.*—Where an entirely new village site is established, or an addition is made to an existing site, the disposal of the lots therein shall be made under such of the rules 42, 43, 43-B or 44 as may be applicable.

46. *Substitution of a new village site for an old one.*—Where a new village site is established, in lieu of a former one which it is determined for any reason to abandon, an agreement shall be taken in Form J, from each occupant before he is permitted under section 60 to enter into the occupation of any lot.

47. *Conditions of grant of land for non-agricultural purposes and alteration of assessment.*—Where unoccupied land is granted for non-agricultural purposes the Collector shall annex such conditions to the grant as may be directed by the State Government or, in the absence of any order of the State Government, may annex such conditions thereto as he thinks fit, subject to the control of the Commissioner; and where the land has already been assessed for the purpose of agriculture, the assessment of such land shall, in the absence of any order of the State Government to the contrary, be altered in accordance with the provisions of rules 81 to 85. Where it has not been assessed, its assessment shall be fixed by the Collector, as far as may be in accordance with the principles laid down for alteration of assessment in the said rules.

47-A. (1) The Collector may permit the construction or retention of a balcony or any other aerial projection over Government land on payment of an annual sum not exceeding 2½ per cent. of the value of the land below the balcony or other aerial projection, as the case may be, subject to a minimum of 2 annas.

(2) The annual payment shall be revised at intervals of not less than 30 years.

(3) A licence in Form JJ shall ordinarily be given for such purposes, subject to such additional conditions as the Collector may with the previous sanction of the Commissioner, deem fit to impose.

Special Rules for Certain City Surveyed Areas.

48. *Special rules for sites of Ahmedabad, Broach, Surat, Rander, Bulsar and Godhra, and certain other places.*—Except as may be otherwise specially directed by the State Government, nothing in rules 37 to 43-A and 44 to 47, both inclusive, shall be

applicable to the grant of any lands to which a City Survey has been extended, under Bombay Act IV of 1868 or under section 131 and which do not vest in the municipality, within the sites of the towns and cities of Ahmedabad (inclusive of its suburbs of Saraspur, Dariapur, Kajipur, Rajpur, Hirpur, Asarwa, Kochrab, Chhadavad, Changispur and Paldi, Broach, Surat, Rander, Bulsar, Godhra, Igatpuri, Bandra-Danda) or of any other town or city to which the State Government may by notification in the Official *Gazette* extend this rule : and nothing in rules 81 to 85 shall apply to any agricultural land lying within the same sites, but to which a City Survey cannot by law extend.

The granting of such lands for building sites, and the granting of permission to use such lands (when assessed for agricultural use) for non-agricultural purposes, shall be regulated by rules 43-B and 50 to 52.

49. *Deleted.*

50. *Mode in which other lands may be disposed of.*—(1) Any unoccupied land to which rule 43-B does not apply and which is not assigned for special purposes may be granted to such person as the Collector deems fit either for purposes of agriculture only or for other purposes.

Lands to be ordinarily sold by auction.—(2) Any such land shall ordinarily be sold by auction to the highest bidder ; but the Collector may in his discretion sell the same by private agreement.

51. *Terms on which building sites may be disposed of.*—(1) Unoccupied land shall be granted for building sites and permission under section 65 to use for non-agricultural purposes lands occupied and assessed for agriculture shall be given by an instrument in a form approved by the State Government, for terms expiring on the date fixed in this behalf by the State Government for each city or town, at a rent or altered assessment, as the case may be, of two pies per square yard per annum, or such higher rate as the Collector may, with the previous approval of the Commissioner fix for any particular site or portion thereof.

Terms on which land intended for future building sites may be temporarily disposed of.—(2) (*a*) Unoccupied lands which are eventually intended for building sites, but of which the immediate disposal for the said purpose appears to the Collector to be undesirable, may be let under written leases in a form approved by the State Government for short terms not exceeding in any case seven years at a ground rent of not less than one anna per square yard per annum.

(*b*) Unoccupied lands under clause (*a*) shall ordinarily, subject to the provisions of the said clause, be let by auction to the highest bidder ; but the Collector may in his discretion let any such land by private agreement.

(3) Notwithstanding anything contained in sub-rule (1) of this rule, lands occupied and assessed for agriculture may, be permitted under an instrument in Form JJJ, to be used for non-agricultural purposes, other than building, for short terms not exceeding seven years at an altered assessment of two pies per square yard per annum, or such higher rate as the Collector may, with the previous approval of the Commissioner, fix for any particular site or portion thereof.

52. *Terms on which lands may be disposed of for agricultural purposes only.*—Unoccupied lands may be leased for purposes of agriculture for terms of one yean An agreement in form F, with such modification, as may be necessary, shall be taker. from every person who is to become as occupant of land under this rule, and the provisions of sub-rules (2) to (4), inclusive, of rule 37 shall be applicable to every agreement so taken.

Property in municipal districts or boroughs specially reserved by the State Government within the meaning of section 50 (2) of the Bombay District Municipal Act 1901 or section 63 (2) of the Bombay Municipal Boroughs Act, 1925.

53. *Unoccupied building sites, etc., within municipal limits to be distinguished from lands forming part of public streets.*—In municipal districts or boroughs, building sites and plots of open ground, which have not been dedicated to public use or already transferred to the municipality, are hereby declared to be specially reserved by the State Government within the meaning of sub-section (2) of section 50 of the Bombay District Municipal Act, 1901 or sub-section (2) of section 63 of the Bombay Municipal Boroughs Act, 1925, as the case may be.

This reservation does not apply to small pieces of ground lying between the houses and the road-way in an irregular street or road of varying width, which should be recognized as forming part of the street and vesting in the municipality unless private individuals have rights thereto. But separate vacant sites between houses do not vest in the municipality even though they are unenclosed unless they have been transferred to the municipality by the State Government.

Both for agricultural and non-agricultural grants.

54. *Form of written permission to occupy under section 60.*—The permission in writing to be given by a Mamlatdar under section 60 to enable an intending occupant to enter upon occupation shall be in Form K, or Form KK.

Disposal of Hadi lands in the North Kanara District.

54A. *Hadi lands.*—(1) Hadi lands are lands in the district of Kanara assigned for use by and leased to the holders of lands on which spice or cocoanut gardens or rice crops are grown.

(2) A Hadi land shall not be leased except to the holder of the land in respect of which it is assigned.

(3) *Terms and conditions of the grant.*—Every lease of a Hadi land shall be made subject to the following terms and conditions, namely :—

(*a*) The person to whom a Hadi land is leased, hereinafter referred to as ' the wahivatdar ', shall execute an agreement in the appended form.

(*b*) On the wahivatdar ceasing to be the holder of the land in respect of which the Hadi land is assigned, (hereinafter referred to as ' such land '), the lease of such land shall terminate and the wahivatdar shall cease to be entitled to any rights in respect of such land.

(*c*) The wahivatdar shall not cut, remove, lop or damage in any way any teak, sandalwood, black-wood or ebony trees or sapling thereof growing on such land. He shall not knowingly or wilfully permit or abet the cutting, removing, lopping or damaging of any such tree or sapling thereof by any other person. He shall forthwith report to the nearest revenue or forest officer any damage to, or loss of, any such tree or sapling thereof.

(*d*) He shall not, except with the previous permission of the Mamlatdar, fell any of the living trees mentioned in the Schedule to this rule. Such permission may be granted by the Mamlatdar on an application made to him and on payment

of Re. 1 per tree to the be felled, if the Mamlatdar is satisfied that the wood is required by the wahivatdar for his own use, either for an agricultural purpose or for the construction or repair of his house situated in or near such land.

(*e*) The wahivatdar shall pay the assessment of such land.

(*f*) The wahivatdar shall provide at his own expense flag holders and coolies at the time of measurement and classification of such land and shall erect or repair all necessary boundary marks of such land.

(*g*) The wahivatdar shall not be entitled to sell or transfer his interest in such land to any other person.

(*h*) If the Collector is at any time of the opinion that the rights conferred by this rule have been or are being abused, he may, subject to the general control of the Commissioner, suspend the exercise of all or any of the said rights or may permit their exercise on payment of such fees as may be fixed by him in this behalf.

(*i*) The Collector may at any time, subject to the sanction of the State Government, determine the lease and take possession of the land or any part of it if it is required for any public purpose. In such case, the Collector shall award to the wahivatdar compensation in respect of reasonable expenses, if any, incurred by him in erecting wall on such land. No compensation shall be payable in respect of the land itself. The decision of the Collector as regards the amount of compensation payable shall be final. For the purposes of this rule a declaration under the signature of the Collector that the land is required for a public purpose shall be conclusive.

(*j*) On breach of any of the conditions of the lease, the Collector may determine the lease and resume possession of the land.

(4) *Rights to be exercised.*—The wahivatdar of a Hadi land may, subject to the provisions of this rule, exercise the following rights only in respect of such land, namely :—

(*a*) He may cut grass growing on such land for his own use.

(*b*) He may clear or break up such land for the purpose of building cattle sheds or temporary huts, sinking wells, digging water channels, clearing paths, erecting threshing floors or sugar cane mills, storing grass, straw, grain, betelnuts or manure, or growing young plants in a nursery.

(*c*) He may burn undergrowth and lantana on such land provided that due care is taken to prevent the fire spreading to adjoining forests, if any.

(*d*) He may remove clay, earth and stones for his own use but not for the purposes of manufacture, sale or barter.

(*e*) He may remove flowers, fruits, leaves, thorns, fallen dead wood, honey and wax, for his own use but not for the purposes of manufacture, sale or barter.

(*f*) He may graze his cattle on such land.

(*g*) He may lop small sap shoots which do not grow into branches during the rainy season.

(*h*) He may lop trees and shrubs for preparing manure.

Schedule.

1. Balghe, Vitex altissima.
2. Karimutal, Ougenia dalbergioides.
3. Shiwani, Gmelina arborea.
4. Hirda, Terminalia chebula.
5. Honni, Pterocarpus marsupium.
6. Jhall, Shorea talura.
7. Matti, Terminalia tomentosa.
8. Nandi (Nana), Lagerstroema microcarpa.
9. Phansas, Artoarpus integrifolia.
10. Wonte, Artocarpus lakoocha.
11. Bokli or Nanja, Mimusops elengi.
12. Heddi, Adina cordifolia.
13. Sagdi, Schleichera trijuga.
14. God Hunshi, Albizzia odoratissima.
15. Holi Matti, Terminalia arjuna.
16. Sampige, Flacourtia montana.
17. Haiga or Kabsi, Hopea wightiana.
18. Manjuti, Adenanthera pavonina.
19. Surhonni, Calophyllum tomentosum.
20. Hebbalsu or Patmbanas, Artocarpus hirsuta.
21. Jambo, Xylia Xylocarpa.
22. Mashi or phudgus, Alseodaphne semicarpifolia.
23. Kavanchi, Bridelia retusa.
24. Kalam, Stephergvne parvifolia.
25. Sir s, Albizzia lebbek.
26. Belati, Albizz a procera.
27. Kharsing or Gensu, Stereospermum xylocarpum.
28. Hongal or Kibul, Terminalia paniculata.
29. Dadsal, Grewia tiliaefolia.
30. Dindal, Anogeissus latifolia.
31. Womb, Saccopetalum tomentosum.
32. Devdar lal, Chikrassia tabularis.
33. Devdar pandra, Cedrela toona.
34. Mhowra, Bassia latifolia.
35. Moha or Ippi, Bassia longifolia.
36. Bobbi or Irai, Calophyllum wightianum.

AGREEMENT.

An agreement made this day of one thousand nine hundred and forty- between the Governor of Bombay (hereinafter referred to as "the Government") of the one part and inhabitant of Taluka District (hereinafter referred to as "the wahivatdar" which expression shall include his heirs, executors, administrators and assigns)of the other part;

Whereas the wahivatdar has applied to the Government of Bombay (hereinafter referred to as "the Government") that the permission may be granted to him for occupation of the Hadi land comprised in survey No. , area assessment attached to survey Nos. in the village of in the taluka of (hereinafter referred to as "the said Hadi land") and that his name be entered in the Government records as the wahivatdar of the said Hadi land;

And whereas permission has been granted by the Government to the wahivatdar to occupy the said Hadi land subject to the terms and conditions hereinafter mentioned.

It is hereby agreed as follows :—

(*a*) The wahivatdar shall pay the assessment of the said Hadi land fixed from time to time and the local fund cess.

(*b*) The wahivatdar shall not permit the said Hadi land to be occupied by any person other than the holder of the land to which it is assigned.

(*c*) On the wahivatdar ceasing to be the holder of the land in respect of which the Hadi land is assigned, the occupancy of the said Hadi land shall terminate and the wahivatdar shall cease to be entitled to any rights in respect of the said Hadi land.

(*d*) The wahivatdar shall not cut, remove, lop or damage in any way any teak, sandalwood, blackwood or ebony trees or sapling thereof growing on the said Hadi land. He shall not knowingly or w lfully permit or abet the cutting, removing, lopping or damaging of any such trees or sapling thereof by any other person. He shall forthwith report to the nearest revenue or forest officer any damage to, or loss of, any such tree or sapling thereof.

(*e*) The wahivatdar shall not, except with the previous permission of the Mamlatdar of (hereinafter referred to as "the Mamlatdar") fell any of the living trees mentioned in the Schedule to this agreement. Such permission may be granted by the Mamlatdar on an application made to him and on payment of Re. 1 per tree to be felled, if the Mamlatdar is satisfied that the wood is required by the wahivatdar for his own use, either for an agricultural purpose or for the construction or repair of his house situated in or near the said land.

(*f*) The wahivatdar shall provide at his own expense flag holders and coolies at the time of measurement and classification of the said Hadi land and shall erect, maintain or repair all necessary boundary marks of the said Hadi land.

(*g*) The wahivatdar shall not be entitled to sell or transfer his interest in the said Hadi land to any other person.

(*h*) The Collector of (hereinafter referred to as "the Collector") may at any time, subject to the sanction of the Government, determine the occupancy and take possession of the said Hadi and or any part of it if it is required for any public purpose. In such case, the Collector shall award to the wahivatdar compensation in respect of reasonable expenses, if any, incurred by him in sinking a well on the said Hadi land. No compensation shall be payable in respect of the land itself. The decision of the Collector as regards the amount of compensation payable shall be final. A declaration under the signature of the Collector that the land is required for a publ.c purpose shall be conclusive.

(*i*) The wahivatdar shall surrender the said Hadi land to the Government in case the garden or the other land to which it is assigned is sold away or in any way disposed of to any other person or is relinquished or possession thereof is otherwise transferred by him.

(*j*) On breach of any of the conditions of this Agreement, the Collector may determine the occupany and resume possession of the said Hadi land.

(*k*) Subject to the provisions of this Agreement the wahivatdar is entitled to the following rights in respect of the said Hadi land and no other, namely :—

(i) He may cut grass growing on the said Hadi land for his own use.

(ii) He may clear or break up the said Hadi land for the purpose of building cattle sheds or temporary huts, sinking wells, digging water channels, clearing paths, erecting threshing floors or sugar cane mills, storing grass, straw, grain, bettelnuts or manure, or growing young plants in a nursery. He may erect a wall round the said Hadi land for the proper protection of trees in it.

(iii) He may burn undergrowth lantana on the said Hadi land provided that due care is taken to prevent the fire spreading to adjoining forests, if any.

(iv) He may remove clay, earth and stones for his own use but not for the purposes of manufacture, sale or barter.

(v) He may remove flowers, fruits, leaves, thorns, fallen dead wood, honey and wax, for his own use but not for the purposes of manufacture, sale or barter.

(vi) He may graze his cattle on the said Hadi land.

(vii) He may lop small sap shoots which do not grow into branches during the rainy season.

(viii) He may lop trees and shrubs for preparing manure.

(*l*) If the Collector is at any time of the opinion that the rights conferred by this Agreement have been or are being abused by the wahivatdar, he may, subject to the general control of the Commissioner, Division, suspend the exercise of all or any of the said rights or may permit their exercise on payment of such fees as may be fixed by him in this behalf.

(*m*) At the determination of the said occupancy the wahivatdar shall quietly deliver up to the Collector on behalf of the Government the said Hadi land.

(*n*) The wahivatdar shall observe all the rules made by the Government of Bombay from time to time in respect of Hadi lands in the Kanara District.

Schedule.

1. Balghe, Vitex altissima.
2. Kar mutal, Ougenia dalbergioides.
3. Shiwani, Gmelina arborea.
4. Hirda, Terminalia chebula.
5. Honni, Pterocarpus marsupium.
6. Jhall, Shorea talura.
7. Matti, Terminalia tomentosa.
8. Nandi (Nana), Lagerstroema microcarpa.
9. Phansas, Artoarpus integrifolia.
10. Wonte, Artocarpus lakoocha.
11. Bokli or Nanja, Mimusops elengi.
12. Hedd , Adina cordifolia.
13. Sagdi, Schleichera trijuga.
14. God Hanshi, Albizzia odoratissima.
15. Holi Matti, Terminalia arjuna.
16. Sampige, Flacourtia montana.

17. Haiga or Kabsi, Aopea wightiana.
18. Manjuti, Adenanthera pavonina.
19. Surhonni, Calophyllum tomentosum.
20. Hebbalsu or Patphanas, Artocarpus hirsuta.
21. Jamba, Xylia Xylocarpa.
22. Mashi or phudgus, Alseodaphne semicarpifolia
23. Kavanchi, Bridelia retusa.
24. Kalam, Stephergyne parvifolia.
25. Siris, Albizzia lebbek.
26. Belati, Albizzia procera.
27. Kharsing or Gensu, Stereospermum xylocarpum.
28. Hongal or Kibul, Terminal a paniculata.
29. Dadsal, Grewia til aefolia.
30. Dindal Anogeissus latifolia.
31. Womb, Saccopetalum tomentosum.
32. Devdarlal, Chikrassia tabularis.
33. Devdar pandra, Cedrela toona.
34. Mhowra, Bassia latifolia.
35. Moha or Ippi, Bassia longifolia.
36. Bobbi or Irai, Calophyllum wight anum.

In witness whereof the Collector of hath on behalf of the Governor of Bombay set his hand and the seal of his office and the (wahivatdar) has also hereunto set his hand the day and year first above written.

Signed, sealed and delivered by
Collector of in the presence of

1.

2.

Seal.

Signed and delivered by the abovenamed wahivatdar
in the presence of

1.

2.

Exceptional Cases.

55. *Disposal of land to which foregoing rules are inapplicable.*—Unalienated land to which none of the foregoing rules is applicable and concerning which no other rules have been framed by the State Government, shall be disposed of in such manner, for such period and subject to such special conditions, if any, as the Collector, subject to the control of the Commissioner, deems fit.

56. *Special forms.*—The forms appended to these rules shall be used where applicable, but where a grant is made on special terms and none of such forms is suitable and a special form has not been sanctioned, the orders of the State Government shall be obtained regarding the form to be used.

57. *Records.*—The document evidencing a grant shall be drawn in duplicate and one copy, which shall be retained by the Government Officer concerned or by the State Government, shall be signed by the grantee.

CHAPTER VIII.

Trees and Forest Rights.

58. *General reservations.*—The extent to which the right of Government to trees is generally conceded to occupants under the third paragraph of section 40 shall be specified in the notification issued under rule 17. The said general concession will ordinarily extend to all trees, except the following :—

(*a*) all road-side trees planted by or under the orders of Government ;

(*b*) teak, blackwood, and sandalwood ;

(*c*) trees, the produce of which has hitherto been disposed of by the State Government :

Provided that whenever any land is disposed of after the first introduction of a settlement of land revenue, such trees shall also be disposed of under section 62 ;

(*d*) any trees specially reserved in the terms of the grant of the land.

59. *Special reservations.*—Trees in groves, trees round temples or places of encampment declared to be such by the Collector, and trees other than teak, blackwood or sandalwood, which for any reason are of special value or utility, shall be specially reserved at the settlement and entries to that effect made in the settlement records.

60. *Disposal of trees on occupied lands.*—(1) Subject to the provisions of rule 63 the disposal of trees on land occupied or being given out for occupation shall be regulated by the following sub-rules :—

(2) Of the trees to which the rights of Government are reserved, such number or kinds as the State Government may from time to time direct will be at the disposal of the Forest Department. Lists shall be kept for all occupied numbers, over the trees in which the Forest Department has any control or lien ; the clearing of these numbers by the Forest Department shall be arranged in concert with the Collector, and every number when cleared shall be recorded as exempt from all interference in the future on the part of the Forest Department. In districts, where there is no Forest Officer, these functions will be discharged by the Collector alone.

(3) All other reserved trees shall be in charge of the Collector who may dispose of the same or of their produce as he may deem fit, subject to the general rules for the disposal of Government property.

(4) In talukas in which the demarcation of forests has been completed, when any unoccupied land containing jungle or valuable trees which have not been included in any forest reserve is granted to any person for cultivation the Collector may offer the trees, or such of the trees as he may see fit, to the occupant. If such person agrees to purchase the same, the value shall be recovered from him by the Collector and credited as land revenue. If the occupant refuses to buy under this sub-rule or sub-rule (3) then the Forest Department should clear the land of trees.

(5) In talukas in which the demarcation of forest reserves has not been completed, the Collector may, if he thinks fit, consult the Conservator of Forests before any land containing jungle or valuable trees is granted ; and if any such land is granted to any person the provisions of sub-rule (4) shall apply ; in no case shall land be granted which is likely to be required for forests.

61. Whenever the right to unreserved trees in any land is at the disposal of the State Government simultaneously with such land all such trees shall invariably be disposed of to the same person who acquires the holding and not to any other person.

62. When the right of Government to the trees in a holding has been once disposed of to the occupant, or when all the reserved trees have been once cut and removed either—

(*a*) at the grant of the land, or

(*b*) after such grant, or

(*c*) within five years before such grant, Government will have no further claim to trees which may afterwards grow in the holding, or which may spring up from the old roots or stumps, so long as the land continues in occupation.

63. *Exception of reserved trees in varkas and beta lands in certain districts from rules 60 62.*—(1) Nothing in rules 60 to 62 inclusive shall be deemed to apply to varkas lands in the districts of Thana, Kolaba and Ratnagiri, and beta lands in the district of Kanara, or to any land in the dindori Taluka or the Peth Taluka of the Nasik District or to any land on the banks of streams and nalas in the Godhra Taluka of the Panch Mahals District, or to any riverside jambul trees growing in occupied lands on the banks of the rivers Mula, Pravara, Mhais and Mhalungi in the Parner, Rahuri, Sangamner and Akola Talukas of the Ahmednagar District; or (pending the completion of the acquisition of all occupied lands within the sanctioned demarcation limits of the forest in the Haveli, Purandhar and Junnar Talukas and the Ambegaon Peta of Poona District) and the Patan, Karad and Wai Talukas and the Shirala Peta of the Satara District to any teak trees in such unalienated and.

(2) In the said lands the trees on which the rights of Government are reserved shall be available for cuttings to be made from time to time by or under the orders of the Forest Department, in consultation with the Collector.

(3) The sale of any such tree or of the timber thereof will confer no right to the after-growth from the root or stump of the tree so cut. The reservation of the rights of Government over the trees will extend to all such after-growth also.

CHAPTER IX.

Disposal of Grazing and Minor Products of Land.

64. *Sale of produce of Government trees.*—(1) The produce of Government trees may be sold by auction annually or for a period of years.

(2) Where any such trees are sold under section 41, the sale shall be by auction or otherwise as the Collector may direct.

65. *Grazing and other similar produce to be ordinarily disposed of by sale for periods not exceeding five years.*—(1) The grazing or other produce of all unoccupied land vesting in Government whether a survey settlement extends to such land or not, and whether the same is assessed or not and of all land specially reserved for grass or for grazing (except land assigned to villages for free pasturage), may be sold by

public auction or otherwise, as the Collector deems fit, year by year, or for any term not exceeding five years, either field by field or in tracts, and at such time as the Collector shall determine.

Provided that the purchasers' rights over such land shall entirely cease on the dates respectively fixed in the following table, unless, under special circumstances, the Collector deems it necessary to alter the time so fixed :—

Collectorates	Waste assessed Dry-crop Land	Waste assessed Rice Land	Reserved Kurans and unassessed Waste
Thana	31st March ...	31st March ...	31st December.
Dharwar	31st March ...	31st December	1st May.
All others	31st March ...	31st March ...	1st May.

66. *Disposal of earth, stone, etc., by the Collector.*—(1) The Collector may, at his discretion, sell by public auction or otherwise dispose of the right to remove earth, stone, kankar, sand, murum, or any other material which is the property of Government for such period and in such quantities and on such terms as he thinks fit.

Provided that such sale or other disposal shall be made subject to the privileges conceded by rules 67 to 70 inclusive.

(2) The rate charged by the Collector under this rule, when the right in question is not put up for sale by public auction, may be either a lump sum, or so much per cubic foot of excavation, or in the case of a Railway Company requiring land for excavating ballast, so much per mile of the railway line for which ballast is obtained, or otherwise as the Collector thinks fit.

67. *Removal of earth, stone, etc., by villagers for their own use without fee with the permission of the revenue patel.*—(1) With the previous permission in writing of the revenue patel, or where there is no such patel, of the Mamlatdar, but without payment of fees (*a*) any potter or maker of bricks or tiles may, for the purposes of his trade, (*b*) any person may. for his domestic or agricultural purposes, remove earth, stone, kankar, sand, murum or other material from the bed of the sea or from the beds of creeks, rivers and nalas or from any unassessed waste land within the limits of the village in which he resides or in which the land for the benefit of which the materials are required is situated :

Provided that no such permission shall be given in respect of lands assigned as burial or burning grounds or for religious purposes.

(2) Nothing in this rule applies to any case falling under rule 69, and where it appears to the revenue patel that any case in which application is made to him under this rule falls under rule 69 he shall refer the application to the Mamlatdar for orders.

68. With the previous permission in writing of the Mamlatdar but without payment of fee, any person may, for the purpose of building a well. remove stone from any of the sources specified in sub-rule (1) of rule 67 if those sources are within the limits of the taluka in whichhe resides.

69. *Excavation.*—(1) In any case where excavation of the soil is likely to damage or destroy any valuable building or any land required for any special or public purpose or any boundary mark, the previous sanction of the Mamlatdar to any such removal shall be required and he shall refuse permission to the extent necessary to prevent such damage or destruction.

(2) *Ports.*—No Patel or Mamlatdar may permit any removal under rule 67 or 68 from land within port limits, or on the banks or shore of any port without the written concurrence of the "Collector of Salt Revenue" and under such conditions, if any, as he may impose.

(3) *Bricks, etc.*—In any case where it appears to the Mamlatdar that the trade carried on by any potter or maker of bricks or tiles is sufficiently extensive and lucrative to render such a charge fair and equitable, he may grant permission only on payment of fees at such rates as may be prescribed by the Collector in this behalf under rule 66 :

Provided that no such fees shall be charged in areas to which rule 82-A has been applied.

(4) In such cases or localities as he thinks fit, the Collector may prohibit the Mamlatdar or the revenue patel from giving permission without obtaining his previous sanction ; and in any such case all applications for permission shall be referred to the Mamlatdar for the Collector's order.

(5) Where the revenue patel refuses permission when the same is applied for under rule 67 or does not refer the application to the Mamlatdar under sub-rule (4) an appeal shall lie to the Mamlatdar.

70. *Removal of earth etc., from village tanks.*—Any person may, with the sanction of the revenue patel, take free of all charge from village tanks as much earth, stone, kankar, sand, murum or other material as he requires : provided that no stones shall be removed that may have fallen from the banks of built tanks, and that no excavation shall be made within 10 cubits of the foot of the embankment of any such tank.

CHAPTER IX-A.

Disposal of Water Vesting in Government.

70-A. No person shall, without the previous permission of the Collector in writing, make use of any water which is the Government property for the purpose of irrigating his land unless—

(*i*) a water rate is levied for the supply of water to the land under the Bombay Irrigation Act, 1879, or

(*ii*) the land is assessed for the advantages accruing to it from such water under the Bombay Land Revenue Code, 1879, or

(*iii*) the land is subject to an existing 'nala chad' on account of irrigation by means of a budki or pumping plant or any other contrivance.

70-B. The Collector shall before granting permission under rule 70-A for the use of water which is the Government property take into consideration the interests of all persons already authorised to use such water.

70-C. The Collector may grant the permission subject to the payment of such water rate, if any, as he may deem fit to impose having regard to the general or special orders passed by the State Government for the levy of water rates for occasional irrigation under section 55 of the Bombay Land Revenue Code, 1879.

70-D. Any person who, without the previous permission of the Collector, in writing, required under rule 70-A makes use of any water which is the Government property for the purpose of irrigating any land shall be liable to pay such water rate not exceeding Rs. 50 per annum per acre of land so irrigated as the Collector may deem fit to impose.

70-E. The water rates payable under rules 70-C and 70-D shall be recoverable as arrear of land revenue.

CHAPTER X.

Alluvion and Diluvion.

71. *Holders of land with shifting boundaries may occupy up to such boundaries.*—When a holding is bounded on any side by the bank or shore of a river, creek or nala or of the sea, the holder will be permitted, subject to the provisions contained in sections 46, 47, 63 and 64, to occupy and use the land up to such bank or shore, notwithstanding that its position may shift from time to time.

72. *The Collector to dispose of claims under section 47.*—(*a*) Claims to decrease of assessment on account of diluvion under section 47 shall be disposed of by the Collector.

(*b*) It shall be the duty of the village officers to ascertain and to record the increases due to alluvion and losses due to diluvion in every holding subject to such changes. They shall also report to the Mamlatdar for orders when the area of any newly formed alluvial or island, or of any abandoned river bed, or land lost by diluvion exceeds the limits prescribed in sections 46, 47 and 64.

CHAPTER XI.

Assignment of Land for Special Purposes.

73. *Cattle stands and dhobis' and potters' grounds.*—(1) Gurcharan (gairan) or grazing ground for cattle, burial and burning grounds, spots near villages on which the village cattle stand, and lands for the use of village dhobis and potters, and for other recognised public needs may be assigned by the Collector for these purposes respectively, according to the reasonable requirements of the villagers without charge; and he may for sufficient reasons at any time revoke such assignment.

(2) Orders under this rule shall be passed in writing and recorded.

CHAPTER XII.

Relinquishments.

74. *Endorsement as to identity required below rajinamas.*—(1) Every notice given under section 74 shall in Form L and the declaration below the notice shall be subscribed by two respectable witnesses.

(2) The Mamlatdar who receives any such notice will be held responsible for exercising due care in ascertaining the identity of the person who has signed the same, notwithstanding that such notice has been duly endorsed as hereinbefore required.

74-A. (1) Subject to the provisions of sections 74 and 76 of the Bombay Land Revenue Code, 1879 (Bom. V of 1879), the holder or holders of any land held for service intending to relinquish the same or any part thereof, that is, to resign or surrender it in favour of Government, shall make an application to the Collector of the district in which such land or part thereof is situate. Such application shall be in writing and shall be signed by the holder or, if there are joint holders, by all such joint holders. If the land is held hereditarily for service, the application shall be accompanied by the consent in writing of all persons who may, at the date of the application, have a present hereditary interest in the land.

(2) If the holder or any of the joint holders or any person having the present hereditary interest is affected with a legal disability, the application or consent, as the case may be, shall be signed by his legal representative entitled to act or enter into contracts on his behalf.

74-B. On the receipt of such application, the Collector may, after holding an inquiry himself or causing such inquiry to be held by an officer not lower in rank than a Mamlatdar or Mahalkari, and on being satisfied that the requirements of sub-rule (1) have been duly complied with, direct that the land shall, subject to any rights, tenures, incumbrances or equities (other than those of Government, the applicant and any other person consenting to the relinquishment) lawfully subsisting in favour of any person, be entered in Government records as unalienated unoccupied land, and the land shall thereupon cease to be land held for service. The Collector may, subject to such orders as may be passed by the Commissioner in this behalf, grant permission to occupy the said land or any portion thereof to any person who made or consented to the relinquishment on such terms and conditions as he thinks fit.

CHAPTER XIII.

Restrictions on Use of Land.

75. *Cultivation of unarable land in survey number when prohibited.*—(1) Land included as unarable (*pot kharab*) in a survey number assessed for purposes of agriculture only is of two kinds :—

(*a*) that which is classed an unfit for agriculture at the time of survey including the farm buildings or threshing-floors of the holder ;

(*b*) that which is not assessed because it is reserved or assigned for public purposes ; or because it is occupied by a road or recognized footpath, or by a tank or

stream used by persons other than the holder for irrigation or for drinking or domestic purposes, or used for a burial or burning ground by any community, or by the public; or because it is assigned for village potteries.

(2) Class (*a*) may be brought under cultivation at any time by the holder and no additional assessment shall be charged therefor.

The cultivation of class (*b*) is hereby prohibited under section 48, sub-section (4):

Provided that this prohibition shall not apply in the case of a tank or stream when such tank or stream is used for irrigation only and waters only land which is in the sole occupation of the holder, or when the privilege of cultivating the dry bed of the tank or stream has been specially conceded to the holder.

76. (1) No occupant of unalienated land, whether assessed for any purpose or not, shall use the same or any part thereof for the manufacture of salt without the previous permission in writing of the Collector of the district.

(2) The Collector may, in consultation with the Collector of Central Excises and Salt Revenue, Bombay, grant permission for the use of such land for such purpose, subject to the payment of non-agricultural assessment leviable on the land, and to such further conditions as the Collector may, subject to the general or special orders of the State Government, impose.

77. *Removal of earth, stone etc., prohibited, if injurious to cultivation and for purposes of trade, etc.*—Save as provided in section 65 and rule 76, no occupant of land assessed or held for purposes of agriculture only, and no person claiming under or acting by authority of any such occupant, shall excavate or remove earth, stone other than loose surface stones, kankar, sand, muram or any other material of the soil thereof, or make any other use of the land (*a*) so as, in the opinion of the Collector, thereby to destroy or materially injure the land for cultivation or (*b*) for purposes of trade or profit or any other purpose except his own domestic or agricultural purposes.

78. *Removal of earth, stone, etc., from building site prohibited except on certain conditions.*—No holder of land assessed or held as a building site, or lease-holder of a building site in a hill station, and no person claiming under any such holder or lease-holder, shall, subject to any special provision in the conditions annexed to his holding under secion 62, section 67 or otherwise, or prescribed by his lease, excavate or remove for at purpose whatever earth, stone other than loose surface stones, kankar, sand, mnym or any other material of the soil thereof, except with the previous permissioura writing of the Collector, and in accordance with such terms (including the n inent of fees for any such excavation or removal) as the Collector in each case thpaymt to prescribe.

79. *Excavation of ulienatned land within site of village, town or city prohibited except for certain purpoes.*—(1) No unaienated land within the site of any city, town or village shall beexcavated without the previous written permission of the Collector, for any purpose except the laying of foundations for buildings, the sinking of wells and the making of grain-pits.

(2) When permission is granted by the Collector to excavate any suchland as aforesaid for any purpose other than those abovementioned, such excavation shall not be made otherwise than in accordance with such terms (including the payment of fees for any such excavation) as the Collector in each case thinks fit to prescribe.

CHAPTER XIV.

Imposition and Revision of Non-Agricultural Assessment.

Alteration of assessment in the case of unalienated lands.

80. *Alteration of assessment when land assessed or held for agricultural purposes is used for non-agricultural purposes.*—Where unalienated land assessed or held for purposes of agriculture only is subsequently used for any purpose unconnected with agriculture, the assessment upon the land so used shall except in the cases provided for in rule 43-B, 51 or 76 and except as otherwise directed by the State Government be altered under sub-section (2) of section 48 and such alteration shall be made by the Collector in accordance with the rules contained in this Chapter.

80-A. On the expiry of the period for which the assessment of any land assessed or held or used for any non-agricultural purpose has been fixed, the assessment shall be revised by the Collector from time to time in accordance with the rules contained in this Chapter.

80-B. When land which is held or used for any non-agricultural purpose is assessed under the provisions of section 52, such assessment shall be fixed and revised by the Collector from time to time in accordance with the rules contained in this Chapter.

81. *Ordinary rates of non-agricultural assessment.*—(1) For the purpose of determining generally the rate of non-agricultural assessment leviable, each Commissioner shall, from time to time, by notification published in the Official Gazette, divide the villages, towns and cities in each district in his division (to which a standard rate under rule 82 has not been extended) into two classes.

(2) The assessment shall then be fixed by the Collector at his discretion, subject to the general or special orders of the State Government at a sum per square yard within the following limits :—

Maximum—For Class I land 2 pies.
For Class II land 1 pie.
Minimum—The agricultural assessment.

In fixing the rate within the above limits due regard shall be had to the general level of the value of lands in the locality used for non-agricultural purposes.

(3) The Collector with the previous sanction of the Commissioner which shall only be given for special reasons to be recorded in writing, may levy on any land non-agricultural assessment at a rate higher than the maximum fixed under sub-rule (2) in respect of any village, town or city in which such land is situated, in cases where the land is either situated in an exceptionally favourable position, or where it is used temporarily for a non-agricultural purpose, or where the purpose for which it is used is of a special kind. Such higher rate shall not however exceed 50 per cent. of the estimated annual rental value of the land when put to non-agricultural use in question.

82. *Special rates of non-agricultural assessment in certain areas.*—In any area in which, on account of there being a keen demand for building sites or for any other special purpose, the State Government may, by notification in the *Official Gazette*,

direct that this rule shall be applied, the rate of non-agricultural assessment shall be determined in accordance with the following provisions and not under rule 81 :—

I. The non-agricultural assessment shall ordinarily be a percentage on the full market value of the land as a building site.

II. In cases where this rule is applied on account of there being a demand for building sites, the market value of the land shall be estimated as far as possible on the basis of actual sales of unoccupied land for building purposes in the locality. In cases where this rule is applied on account of the demand being for other special purposes, the market value shall be estimated as far as possible, on the basis of actual sales of unoccupied land of which the value is enhanced by the existence of the special demand.

III. The State Government shall determine what percentage shall be charged in any locality to which this rule is applied, and the standard rates of non-agricultural assessment shall be calculated thereupon and shall be levied in place of the current rate of assessment. At intervals of ten years or, in particular localities, at such shorter intervals as the State Government may direct, the rates shall be revised with the sanction of the State Government. Until the rates are so revised, the old rates shall remain in force. The rates sanctioned from time to time shall be published in the Official *Gazette*. A public notice shall be given one year before any revised rate comes into force.

IV. A rate differing from the standard rate of non-agricultural assessment in any locality shall not be levied without special reasons which shall be recorded : provided that the Collector, with the previous sanction of the Commissioner, may levy a higher rate in the case of land situated in an exceptionally favourable position.

Provided that the non-agricultural assessment of plots of land not built upon in Development Department Schemes shall be limited to a maximum rate of Re. 1 per 250 square yards or part thereof.

V. *Deleted.*

VI. The rates of non-agricultural assessment leviable on lands in the Bombay Suburban Division, to which this rule applies, shall however be reduced to such extent as the State Government may specify by a notification in the Official *Gazette*.

82-A. Notwithstanding anything in rules 81 and 82 in any area to which the State Government may by notification in the Official *Gazette* direct that this rule shall be applied an additional rate of Rs. 2½ for every lakh of bricks manufactured in any one year shall be levied in addition to the annual assessment at the rate determined in accordance with the provisions of rule 81 or 82, as the case may be, and if such rate is less than Rs. 40 at the rate of Rs. 40 per acre on land used for the manufacture of brick : Provided that where exact accounts of manufacture are not available, the Collector shall be at liberty to fix the number according to the known capacity of the kiln, and his decision shall be final.

83. *Cancelled.*

84. *Grant of permission in hill stations, etc.*—In hill stations and such other localities as the State Government may direct, permission shall not be granted under section 65 except on such conditions as are considered desirable, regarding the style of building, the period for construction and the observance of municipal or sanitary regulations. Such conditions shall be embodied in the Sanad.

85. *Assessment leviable on compounds ; reduced in certain cases.*—Non-agricultural assessment shall ordinarily be levied upon the whole of the land within the compound of a building and not merely upon the land covered with building.

86. *Levy of non-agricultural assessment when to begin.*—(*a*) The non-agricultural asssesment shall ordinarily be levied from the first day of the revenue year next succeeding the revenue year in which permission to use the land for non-agricultural purposes was given, provided that (1) where the use is temporary the Collector may in his discretion levy it from the first day on which or the commencement of the year in which the non-agricultural use begins.

(2) In the case of building sites held by Co-operative Housing Societies which are not built upon, no non-agricultural assessment shall be levied for the three years subsequent to the date on which possession of the land was taken or the building permission granted, as the case may be. And on the expiry of that period, non-agricultural assessment shall be levied with effect from the first day of the next revenue year at half the rate current in the locality, unless for special reasons, which shall be specified in writing the Collector considers it desirable that the full exemption from non-agricultural assessment should be continued for a further period or periods. In all cases, the full non-agricultural assessment payable in the locality shall be levied as soon as a plot is built upon.

(*b*) Where no permission was given the non-agricultural assessment levied for non-agricultural use shall always be levied from the first day of the revenue year in which the use commenced.

86-A. *Graduated levy of non-agricultural assessment.*—If the non-agricultural assessment fixed in accordance with the rate determined under rule 82 in respect of land used for building purposes is revised and increased, such revised non-agricultural assessment shall be levied in the following manner :—

(1) If the rate of the revised non-agricultural assessment does not exceed 2 pies per square yard the whole of such revised non-agricultural assessment shall be levied from the year in which the revised non-agricultural assessment is leviable under rule 86.

(2) If the rate of the revised non-agricultural assessment exceeds 2 pies per square yard,

(*i*) an assessment equal to double the non-agricultural assessment existing at the time of revision in respect of the said land or an assessment at the rate of 2 pies per square yard whichever is greater shall be levied in the year in which the revised non-agricultural assessment is leviable under rule 86, and

(*ii*) thereafter in subsequent years the assessment shall be increased every year by an amount which is equal to the non-agricultural assessment existing at the time of revision or to an assessment at the rate of 1 pie per square yard whichever is greater until the whole amount of the revised non-agricultural assessment as fixed is leviable in any year :

Provided that—

(*a*) the whole of the revised non-agricultural assessment so fixed shall be levied from the year in which the limit of such revised non-agricultural assessment is reached or from the eleventh year computed from the year in which the revised non-agricultural assessment is leviable under rule 86, whichever is earlier, and

(*b*) in localities where the concession of reduced assessment has been granted under rule 56-III and IV of the Land Revenue Rules published in Government *Notification No. 7368, dated 6th December 1881,* as subsequently amended from time to time, each successive increase in the non-agricultural assessment under sub-clause (*ii*) of clause (2) above shall be made at intervals of two years and the whole of the revised non-agricultural assessment which is fixed shall be levied from the year in which the limit of such revised non-agricultural assessment is reached or from the twenty-first year computed from the year in which the revised non-agricultural assessment is leviable under rule 86, whichever is earlier.

87. *Revision of non-agricultural assessment.*—(*a*) The period for which the non-agricultural assessment is to be fixed shall ordinarily be 30 years except in the Bombay Suburban District where, on account of its special conditions the period shall ordinarily be fifty years. On the expiry of this or any other period so fixed, and at such further intervals as may be from time to time directed by the State Government in this behalf, the assessment fixed shall be liable to revision in accordance with the Code and the rules and orders for the time being in force thereunder.

(*b*) When land which is used for non-agricultural purposes is assessed under the provisions of rules 81 to 85, a sanad shall be granted in the Form M if the land is used for building purposes, in Form NI if the land is used temporarily for non-agricultural purpose other than building and in Form N in all other cases.

88. *Deleted.*

89. *Maps showing non-agricultural assessment.*—(1) Each Collector shall permanently maintain in his office and from time to time as required renew a map of his district upon which it shall be clearly shown by distinct colours, or otherwise as may be convenient, under which of the foregoing rules and classes all the land of the district falls.

(2) When an area is very small, or when its limits intersect a village in an intricate way, insets on a larger scale or a supplementary file of village maps shall be provided.

(3) Whenever any area is brought under a different class or rate by a fresh order the map shall be corrected and the authority for the change noted over the Collector's signature on the map.

(4) Each Mamlatdar shall similarly maintain a map of his taluka with similar supplements which shall be similarly corrected and endorsed by the Collector at each change.

(5) These maps shall be open to public inspection free of charge during all office hours.

90. *Levy of rate when land assessed for a purpose other than building is used for building.*—(1) When any holding which has been assessed or is held for non-agricultural purposes other than building, is with the Collector's permission, used for residential building, the Collector shall levy the rate of assessment imposed on land used for such purpose in the locality.

(2) In such cases the holder shall be given a new sanad in the form prescribed from time to time under rule 87 (*b*).

91. *Re-imposition of agricultural assessment.*—(1) When any holding, which has been assessed or of which the assessment has been altered for any non-agricultural use, is used for agriculture only, the Collector may, on the application of the holder, remove the non-agricultural assessment and impose either the old agricultural assessment, if any, and if the settlement period has not expired; or may impose in other cases a new agricultural assessment equivalent to that imposed on other similar agricultural lands in the vicinity.

(2) Such agricultural assessment shall be subject to the same conditions as to periodical revision and the same rules and provisions of law as if they had been imposed at the ordinary revenue settlement of the village in which the land is situated:

Provided that if the holder has paid any lump sum as commuted assessment for any period, he shall not be entitled to any refund or to any change in the conditions of his lease or agreement until the period for which the commutation has been paid expires.

Alteration of Assessment in surveyed and settled Alienated Villages.

92. *Application of rules; certain powers of Collector to be exercised by holder with commission.*—When land assessed for purposes of agriculture only is subsequently used for any purpose unconnected with agriculture, the assessment upon the land so used shall, unless otherwise directed by the State Government, be altered under sub-section (2) of section 48 by the Collector in accordance with rules 81 to 87 inclusive:

Provided that the powers of the Collector under those rules, other than the power of estimating the full market value and fixing standard rates of assessment, shall be exercised by the holder or holders of the alienated village in respect of land specified in a commission conferring the powers of a Collector under section 65 or 66 upon such holder or holders under section 88 (*d*).

93. *Fines.*—For the purposes of determining the amounts of the fines leviable under section 66, rules 99 to 102 shall be applied:

Provided that the powers of the Collector under section 65 or 66 respectively shall be exercised in accordance with the provisions of rules 99 to 102 by the holder or holders of the alienated village in respect of land specified in a commission conferring the powers of a Collector under section 65 or 66 respectively upon such holder or holders under section 88 (*d*).

94. *Applications how to be dealt with.*—(1) When the Collector receives an application under section 65 for permission to use for any other purpose land assessed for purposes of agriculture only, he shall forthwith forward to the holder or holders of the alienated village in which the land is situated a copy of the application and shall as soon as possible thereafter also forward to such holder or holders a letter showing the non-agricultural assessment leviable upon use of the land for such other purpose and requesting such holder or holders to intimate within one month of the date of the letter whether the application should be granted or refused.

(2) If such holder or holders intimate that the application should be granted it shall be granted accordingly; but if such holder or any of such holders intimate that the application should be refused or do not make any intimation within the time specified the application shall be refused.

95. *Procedure when information of use for non-agricultural purposes is received.*—(1) When the Collector receives information that any inferior holder of land assessed for purposes of agriculture only has rendered himself liable to any of the penalties specified in section 66 the Collector shall address to the holder or holders of the alienated village a letter communicating the information and the liabilities of the holder of the said land and showing the non-agricultural assessment or fine or both leviable and requesting the holder or holders of the alienated village to intimate within such time as the Collector considers reasonable whether the liabilities should or should not be enforced.

(2) If such holder or holders intimate that the liabilities should be enforced, they shall be enforced accordingly ; but if such holder or any of such holders intimate that the liabilities should not be enforced or do not make any intimation within the time specified or wthin such further time as may specially be granted, they shall not be enforced.

(3) Provided that the Collector shall not pass any such orders in respect of land specified in a commission conferring the powers of a Collector under section 66 upon the holder or holders of the alienated village under section 88 (*d*) but shall forthwith communicate the information for the orders of such holder or holders of the alienated village ; and also provide that any such information may be received and acted upon by such holder or holders of the alienated village direct.

96. *Communication of orders and levy of assessment.*—(1) The Collector, or the holder or holders of the alienated village, as the case may be, shall communicate any orders passed by him or them under these rules to the Mamlatdar, who shall communicate such orders to the applicant or holder of the land concerned and shall direct the village officers to levy any non-agricultural assessment or fine so ordered.

(2) Such non-agricultural assessment or fine shall be levied in the same manner as other land revenue and shall be paid wholly to the holder or holders of the alienated village where such holder or holders are entitled to the whole land revenue of the village or proportionately to their shares when such holder or holders are entitled to a proportion only of the land revenue in accordance with the conditions under which they hold the alienated village.

96-A. *Re-imposition of agricultural assessment in surveyed and settled alienated villages.*—The provisions of rule 91 shall apply also to the holdings assessed to non-agricultural use in surveyed and settled alienated villages.

97. *Kadim and sheri lands exempted.*—Nothing in rules 92 to 95 and 96-A shall be deemed to apply to lands which are alienated lands apart from the alienation of the village in which they are situated, nor alienated land in the possession of and occupied in person by the holder or holders of the alienated village.

98. *Meaning of "holder" of alienated village.*—For the purposes of rules 92 to 97 the holder or holders of any alienated village shall be taken to mean the actual holder or holders or in cases of doubt the person or persons whose name or names is or are registered as such in the register kept under section 53.

Permission for non-agricultural use and fines in cases of unauthorized use.

99. *No fine ordinarily to be imposed under section 65.*—No fine shall ordinarily be imposed under section 65, that is to say, where land assessed or held for purposes of agriculture is used for any purpose unconnected with agriculture with the permission of the Collector.

100. *Maximum fine leviable under section 66.*—Any fine imposed by the Collector under section 66 shall be fixed by him at his discretion subject to rule 101 shall not exceed ten times the non-agricultural assessment imposed under this Chapter.

101. *Maximum fine leviable for unauthorised use for building, brick making etc.*—When the material of the soil of any occupied land is employed for bricks or tiles or pottery or for any other non-agricultural purposes, without the permission of the Collector being first obtained and the value of the land is thereby adversely affected, a fine may be levied at a rate not exceeding double the rate prescribed in rule 100.

102. *Saving of special cases dealt with by the State Government.*—Notwithstanding anything contained in rules 99 to 101, the Collector may, in such cases as the State Government deem exceptional or unusual, impose a fine, whether under section 65 or under section 66, at such rate as may be fixed by the State Government in that behalf.

103. *Limit of fine under section 61.*—The limit of fine to be levied under section 61, when land is unauthorizedly occupied and used for any non-agricultural purpose, shall be double the amount of the fine that would be leviable under section 66 and rule 100 if the same land being in lawful occupation had been used by the holder for the same purpose without the permission of the Collector :

Provided that a fine up to Rs. 100 may be levied in any such case irrespective of the area of the land involved.

CHAPTER XV.

Record of Rights.

104. The record of rights and mutations, the index of lands and the register of disputed cases shall be kept in forms O, P and Q respectively ; provided that in sites surveyed under section 131, these forms may be modified by the Director of Land Records to suit the requirements of cities, the record of rights being termed the " Property Register ". After the original preparation of the Record, all later entries altering or transferring those rights are termed " mutations ".

105. (1) When the record of rights is first introduced in any village, as soon as the preparation has begun, the village accountant shall cause notice thereof to be given by beat of drum and shall post up a written notice in the chavdi. He shall also write at the head of the record a certificate that such notice was duly given.

(2) Prior to the preparation of the fair copy of the record of rights, the village accountant shall prepare a rough copy of the record in the form of an Index of Lands with all rights noted against each parcel. Until the fair copy is prepared, such rough copy shall be used as and be deemed to be the register of mutations, and the provisions of the Code and of these rules which apply to the said register shall apply so far as may be to such rough copy, and the provisions of rule 111 respecting the introduction of the re-written copy of the index shall apply so far as may be to the introduction of this first fair copy of the record.

106. (1) Every mutation shall be posted in the Diary by the village accountant and examined by the Circle Inspector and shall be read out and explained by the latter to all persons present.

(2) The Circle Inspector shall initial all entries so examined.

(3) If any person adversely affected admits an entry to be correct, the Circle Inspector shall note the admission.

(4) If any interested person disputes the correctness of an entry, the Circle Inspector shall not erase but shall correct any errors admitted by all parties either by bracketing the errors and inserting the correct entries by interlineation or side note or by an entirely fresh entry, in either case authenticated by his signature: if the error is not admitted, he shall enter the dispute in the Register of Disputed Cases (form Q), and it shall be disposed of under rule 108.

107. (1) The entries in the Diary of mutations shall be further tested and revised by a revenue officer not lower in rank than a Mamlatdar's First Karkun.

(2) Any entry found by such officer to be correct shall be certified by him.

(3) Any entry found to be incorrect shall, if no dispute is brought to his notice, be corrected as in rule 106 (4) and certified by him; such correction shall be a new mutation for the purpose of section 135D (2).

(4) Where such officer finds that there is a dispute regarding any entry examined by him, he shall enter the dispute in the register of disputed cases and the dispute shall be disposed of under rule 108. Such officer shall, wherever possible, himself dispose of the dispute under the said rule forthwith.

(5) One appeal only shall lie against any entry certified under sub-rule (2) or corrected under sub-rule (3) otherwise than by the Collector himself, to the same authority to which an appeal lies in a case decided under rule 108.

108. (1) Disputes entered in the register of disputed cases shall ordinarily be disposed of by the Mamlatdar's First Karkun or by the Mamlatdar, but may be disposed of by the District Inspector of Land Records or by any revenue officer of superior rank to that of First Karkun.

(2) The enquiry shall ordinarily be made in the village in which the land is situate or where the interested parties reside.

(3) The officer making the enquiry shall record his order disposing of the dispute in the said register, and shall then make such entry in the Diary of mutations as may be necessary.

(4) Such officer shall certify the entry in the Diary of mutations to be correct.

(5) An appeal against an order under this rule shall, if the order has been made by the Mamlatdar's First Karkun, the Mamlatdar, the District Inspector or a Revenue Officer of lower rank than that of a Deputy Collector, lie to the Sub-Divisional Officer, or to an officer appointed by the State Government in this behalf, and if the order has been made by the Sub-Divisional Officer, the Superintendent of Land Records or by a Revenue Officer of a rank not lower than that of a Deputy Collector, to the Collector; such appeal shall be presented within sixty days from the date on which the copy of the order was served on the appellant or was otherwise intimated to him:

Provided that the appellate authority may, after recording its reasons in writing admit an appeal after the aforesaid period of sixty days if it is satisfied that the appellant had sufficient cause for not presenting the appeal within such period.

Subject to the provisions of sub-rule (6) the decision of the appellate authority shall be final. There shall be no appeal against the order of the Collector. No second appeal shall lie in any case.

(6) The State Government may call for and examine the record of any enquiry or the proceedings of any subordinate revenue officer held under rules 106, 107 and sub-rules (1) to (5) of this rule for the purpose of satisfying itself as to the regularity of such proceedings and as to the legality or propriety of any decision or order passed in such proceedings.

If, in any case, it shall appear to the State Government that any proceedings so called for or any decision or order made in such proceedings should be modified, annulled or reversed, it may pass such order thereon as it deems fit.

(7) If the appellate order or the order passed in revision by the State Government confirms the previous decision it shall be noted in the remarks column against the entry which is confirmed. If it alters it, the change shall be entered as a fresh, but not disputable, mutation.

109. Entries in the Diary of mutations shall ordinarily be transferred to the index of lands as soon as certified.

110. The index of lands shall be re-written incorporating all mutations recorded up to the date prescribed by the sub-divisional officer whenever that officer, in view of the number of entries in the Diary of mutations, shall so direct.

111. (1) When the re-written index of land is reported to be complete, the Collector or sub-divisional officer shall fix a date for its inspection and shall cause notice thereof to be given calling upon all persons interested to appear on such date at a specified place in or in the immediate vicinity of the village concerned, and notifying that any such person may before such date inspect the Index on application.

(2) On the date and at the place appointed, the Collector or sub-divisional officer shall compare the new copy with the old Index and the Diary of mutations, cause such portions thereof to be read out as any of the persons present may desire to hear, read and make any correction that may be necessary.

(3) Such officer shall then sign the new Index and subscribe below it a certificate that the entries therein have been duly tested and found correct.

112. Where a revenue officer or a village accountant issues any summons or notice under section 135E (1) or G, he shall follow the provisions of section 190 or 191, as the case may be.

113. Record of such tenancies as are not perpetual or notified under section 135B (2) shall be kept in form R. The entries therein shall be tested by the Circle Inspector when he examines the crops, and by other officers of higher rank. When any error is discovered by any of these inspecting officers, they may correct it and initial the corrected entry. The register will be compiled every ten years, but there will be no notification. When any dispute as to such tenancies is found to exist, a note of the fact may be made in the register, but no entry will be made in the register of disputed cases, nor will any revenue officer decide the dispute.

CHAPTER XVI.

Recovery of Land Revenue.

114. *Land revenue where and to whom to be paid.*—All payments of land revenue shall be made to the officers of the village in which such revenue is due : provided that, with the sanction of the Collector, such payment may in special cases be made into a Government Treasury within the district to which the payment appertains.

Provided further that where the Collector acting under the general or special orders of Government, declares any village in a taluka to be a centre for the payment of land revenue in respect of such villages as the Collector specifies in that behalf, payment of the land revenue due in the villages so specified, to the officers of those villages shall be made at the centre so declared.

114-A. *Publication of declaration under rule 114.*—Any declaration made by the Collector under rule 114 shall be made known by affixing a copy thereof in the chavdi or some other public building in the villages concerned or in such other manner as the Collector may deem expedient.

114-AA. (1) In cases where the non-agricultural assessment is fixed under rule 87, the assessment, if it does not exceed one rupee, may, with the consent of the Collector instead of being rendered annually, be commuted at any time by the occupant for a lump payment for the term or residual part of the term for which it is fixed.

The lump payment shall be equal to three-quarters of the aggregate amount of the assessment due for the said term or residual part thereof, as the case may be, or twenty times the assessment, whichever is less.

A note of such payment or commutation shall be made in or at the foot of the sanad or lease granted in respect of the land under rule 87(*b*). On the expiry of the period for which it has been commuted, the assessment, whether revised or not, shall again be leviable unless it is again commuted under this rule.

(2) The lessee of any land the rent of which is fixed under rule 51 may in the like manner commute such rent if it does not exceed one rupee.

(3) The Commissioner may, by general or special order, authorise the commutation of any other item of annually recurring land revenue which does not exceed one rupee, for a period not exceeding fifty years.

(4) The provisions of sub-rule (1) shall apply *mutatis mutandis* to every case of commutation of rent or other items of land revenue under sub-rule (2) or (3).

115. Except in Ratnagiri, Kolaba, Kanara and Thana, Collectors shall, with the sanction of the Commissioner, classify the villages in their districts into the following three classes :—

Class I : kharif villages in Ghat districts and elsewhere where it is necessary that the revenue be secured specially early ;

Class II : kharif villages in Gujarat and elsewhere where no such special provision is necessary ;

Class III : rabi villages generally.

116. *Dates on which agricultural revenue to be paid.*—(1) The land revenue payable in respect of lands assessed for purposes of agriculture only shall be paid in equal or nearly equal instalments on the following dates :—

(*a*) Deleted ;

(*b*) In Thana district—the 1st January and the 16th February ;

(*c*) and in villages classed under rule 115 in—

Class I, on the 5th December and the 5th January ;

Class II, on the 5th January and the 5th March ;

Class III, and the whole of the District of Ratnagiri, Kanara and Kolaba the 5th February and the 5th April :

(2) Provided that—

(*i*) in any district or in any part of a district where the dates above specified are found unsuitable, the Collector may, with the sanction of the Commissioner, fix such other dates as he may deem expedient according to the circumstances of the season and of the villages concerned and the character of the crops generally shown therein ;

(*ii*) where the annual amount of the revenue is five rupees or under, it shall be payable in a lump sum at the date of the first instalment ;

(*iii*) if the person from whom the year's revenue is due so wishes, he may in any case pay the whole amount at once instead of by instalments.

117. *Other land revenue.*—Land revenue, other than that due upon agricultural land shall ordinarily be paid in one instalment, at the time of the first instalment of agricultural land revenue or on such other date as the Collector thinks fit in any case to prescribe ; but in special cases the Collector may in his discretion allow the payment to be made in two or more instalments on dates which shall be fixed by him.

118. *Form of notice of demand.*—The notice of demand to be issued under section 152 shall be in form S.

119. *Duties of village officers.*—(*a*) It shall be the duty of the village officers to warn landholders verbally from time to time of the dates on which their instalments are due, and to use their influence in securing prompt payment without resort to notices of demand or other compulsory processes.

(*b*) Village officers shall report to the Mamlatdar the names of landholders who, they have reason to believe, will not punctually pay their instalments, in order that precautionary measures under sections 140-145 may be, when necessary, adopted in time : and shall immediately report any case where the produce of any land on which the assessment has not been paid is attached by a Civil Court.

119-A. *Superior holder may make only one application under section 86 in respect of inferior holders or co-sharers in his holdings in one and the same village.*—A superior holder seeking assistance under section 86 for the recovery of rent or land revenue payable to him by inferior holders, or by co-sharers in his holding may make one application in respect of all or any number of the inferior holders or co-sharers if the land in respect of which the rent or the land revenue is payable by them is situated in one and the same village.

CHAPTER XVII.

Disposal of Forfeited Land.

120. *Restoration or grant on inalienable tenure.*—Where the Collector thinks it advisable that the holding of a defaulter should, after forfeiture, be either restored to the defaulter or given out with or without any occupancy price to any other person, subject to the condition that he shall not transfer it in any way to another person without the previous sanction in writing of the Collector, the Collector, after having declared such holding to be forfeited to the State Government, may, without having resort to any of the other means provided in the Code for the recovery of an arrear of land revenue, restore, or give it out (as the case may be), accordingly, and shall take an agreement in form T.

121. *Partial forfeiture.*—Where the land in respect of which an arrear is due consists of two or more survey numbers or of two or more sub-divisions of survey numbers or of two or more estates separately assessed, and the Collector is of opinion that the whole amount of such arrear could be realized by the sale of less than all of such survey numbers, portions or estates, he shall restrict forfeiture to such one or more survey numbers or the sub-divisions as prove sufficient to realise the arrears.

122. *Deleted.*

123. *Disposal of forfeited land otherwise than by sale in certain cases.*—Forfeited land shall not be put up for sale in the following cases, but shall be disposed of in the manner hereinafter prescribed for the particular case under which it falls, namely :—

(*a*) Where the Collector thinks that, owing to general agricultural depression or to the want of demand for such land, or to a combination of the neighbouring land-holders, or for any other special cause, there will be no bidders at the sale, or that the highest amount bid will be considerably below the reasonable value, he shall cause the land to be entered in the land records as unoccupied.

(*b*) Where the Collector finds that the land is likely to be required either immediately or within a reasonable time for any of the purposes described in section 38, he shall take steps at once to assign it for such purpose.

(*c*) In the case of a forfeited alienated holding, where the Collector considers it expedient to allow the land to continue in the possession of its actual holder or tenant, as an occupant of unalienated land, annulling the alienation, he shall pass orders accordingly for its continuance.

(*d*) In the case of an inferior holding forfeited on account of an arrear of rent or land revenue due to a superior holder, for the recovery of which assistance is being rendered under sections 86 and 87, the Collector may in his discretion transfer the holding to the superior holder thereof, subject to such tenures, rights, incumbrances or equities (if any) as he may direct under section 56.

(*e*) In any other case, where the Collector considers it is expedient that the disposal of a forfeited holding should be otherwise than by sale, and obtains the sanction of the State Government thereto, he shall dispose of it in accordance with the particular orders for its disposal passed or sanctioned by the State Government.

124. *Forfeited land to be sold for recovery of arrears in other cases.*—In cases not falling under rule 120, 121, 122 or 123, forfeited land shall, subject to the provisions of rule 126, be put up for sale for recovery of the arrears due.

125. *Rules and orders applicable to sales of forfeited land.*—(1) Every sale of forfeited land shall be made subject to the same rules as are applicable to the sale of unoccupied unalienated land so far as the same are consistent with the provisions of Chapter XI.

(2) The Collector should ordinarily set side the sale under section 179, if in his opinion—

(*a*) the bidding at such sale has not been *bona fide;* or

(*b*) there has been collusion to recover the holding without payment in full of the arrears and charges due to the State Government or the superior holder ; or

(*c*) there has been some material irregularity or mistake or fraud, in publishing or conducting such sale, which is likely to have affected the amount of the highest bid or otherwise to have caused substantial injury to any person.

126. *Restoration of fo.feited land.*—(1) It shall be in the discretion of the Collector to restore any forfeited land at any time previous to any sale or other disposal under these rules on payment of the arrear in respect of which the forfeiture was incurred together with all costs and charges lawfully due by the defaulter, or on security being given to his satisfaction for the payment of the said arrear, costs and charge within a reasonable period :

Provided that no forfeited alienated holding, which is not held for service, shall be restored as alienated land without the previous sanction of—

(*a*) the Commissioner if it is assessed at more than Rs. 50 ;

(*b*) the State Government if it is assessed at more than Rs. 100.

(2) Where in the case of a forfeited alienated land held for service by a watandar the Collector is satisfied that the failure to pay the land revenue due thereupon arose solely from the inability of the defaulter to meet the demand, he may deduct from the forfeited land a portion of which the price would be likely to equal the amount of the arrear recoverable, and deal with such portion in accordance with such of rules 122 to 125 as are applicable, and restore the remainder of the forfeited land to the defaulter, or may restore the entire forfeited land to the defaulter, and either remit the arrear of land revenue due, or make such arrangements for its being paid in the future as he thinks fit.

CHAPTER XVIII.

Sales.

127. *Auction sales under rule 42 where to be held.*—Auctions held under rules 37 (1), 41, 42 and 50(2) shall ordinarily be conducted in the town or village in which the land is situated.

128. *Upset price may be fixed.*—Where any land or other property is sold by public auction, an upset price shall, if the Collector thinks fit, be placed thereon :

Provided that where in the opinion of the Collector difficulty is likely to be experienced in effecting speedy recovery of the arrears or bidders are likely to be deterred rom o ffering bids, no such upset price shall be placed.

129. *Sales how to be conducted.*—(1) Every sale by auction under these rules, or in pursuance of any of the provisions of the Code, shall be conducted, so far as may be, in accordance with sections 165, 166, 170 to 177 both inclusive and 180. The proclamation and written notice of sale required to be issued under sections 165 and 166 shall be in one of the forms U or W, with such modifications, if any, as may be necessary :

(2) Provided that, in conducting the following sales, namely :—

(*a*) sales of the right of grazing and of the right to take or cut grass in waste lands,

(*b*) sales of the right to take the fruit of specified Government trees for a specified period, and

(*c*) sales of dead-wood,

the procedure shall be in accordance with such orders as may from time to time be made by the Collector either generally or in a particular case instead of the procedure prescribed in sections 165 and 166.

(3) Where in the opinion of the Collector difficulty is likely to be experienced in effecting speedy recovery of the arrears or bidders are likely to be deterred from offering bids, it shall be lawful for the Collector or his nominee to bid at the auction and purchase the land or other property for a bid of rupee one.

CHAPTER XIX.

Appeals.

130. *Form and contents.*—Every appeal shall be made in the form of a petition addressed to the authority to whom an appeal lies, and shall be drawn up in concise, intelligible and respectful language ; and shall bear the signature or mark of the appellant or of his duly authorized agent.

(2) The petition should give the following particulars :—

the name, father's name, occupation and place of residence or address of the appellant ;

the name and address of the writer of the petition.

(3) The petition should also contain a brief and unexaggerated statement of the facts on which the appellant relies in support of his appeal and the grounds of the appellant's objection to the order or decision appealed against.

131. *Presentation.*—(1) Appeals may either be presented to the authority to whom an appeal lies in person or be forwarded to him by post.

(2) Where an appeal is sent by post, the postage on the cover containing it must invariably be fully prepaid.

132. *Rejection of appeals without enquiry into their merits.*—In attention in any material respect to the requirements of rule 130 or 131 will render an appeal liable to be rejected without enquiry into its merits.

CHAPTER XX.

Penalties.

133. *Breaches of the rules how punishable.*—Breaches of rules hereunder mentioned shall be punishable on conviction before a Magistrate as follows :—

(1) Whoever commits a breach of rules 67, 68, 69, 70 or 78, by excavating or removing earth, stone, kankar, sand, muram or any other material of the soil without due authority ;

with imprisonment which may extend to one month, or with fine which may extend to five hundred rupees.

(2) Whoever commits a breach of rules 75, 76, 77 or 79, by using or excavating land in a prohibited manner, or for a prohibited purpose, without due authority :

with fine which may extend to five hundred rupees.

(3) Breach of any of rules 67, 70, 72(*b*), 119(*a*), 119(*b*), 134 or 135 committed by a village officer or city surveyor—

(*a*) by taking or levying any fees for preparing any document or copy or extract of any document which he is bound by any such rule to prepare without charge, or

(*b*) by charging any fee (*i*) for granting any permission or inspection which he is authorized by any such rule to grant, or (*ii*) for making any search for records, for which no fee can lawfully be charged,

(*c*) by refusing without reasonable cause an inspection of land records which he is required by any such rule to permit : with imprisonment which may extend to one month, or

with fine which may extend to five hundred rupees.

(*d*) by refusing or neglecting to prepare any document or copy or extract of any document or to sign or to cerfity the same, in the manner prescribed by any such rule, or

(*e*) by neglecting to make any report or to perform any duty which he is required by any such rule to make or to perform :

with fine which may extend to five hundred rupees.

CHAPTER XXI.

Certain Documents to be prepared free of Charge.

134. *Village accountants to prepare certain documents without charge when so desired*—(1) It shall be the duty of every village accountant, if so requested by any occupant, or by any person about to become an occupant, of land in his village, to prepare any agreement that may be necessary under either rules 37, 43 and 43-B, 46 or 120 without fee or charge of any kind, and any notice of relinquishment under section 74.

(2) A village accountant who prepares any such agreement or notice shall affix his signature beneath the words "written by" on the lower left-hand corner of such agreement or notice.

CHAPTER XXII.

Copies, Inspection and Searches.

I.—Inspection.

135. *Certain documents to be open to inspection.*—Documents, maps, registers, accounts and records, the right of inspection of which is provided for in section 91 of the Indian Registration Act (XVI of 1908) and in section 213 and all *public documents* which any person has, under the provisions of any law for the time being in force, a right to inspect, shall be open to inspection in the office of the officer in charge of the same during the usual office hours every day, except Sundays and public holidays, on payment of the fee hereinafter prescribed in this behalf: and not otherwise :

Provided that no fee shall be charged for inspection (with the permission of the officer in charge) of the Enquiry Proceedings or Register or Property Register of a City Survey by a Municipal Official for municipal purposes :

Provided also that no fee shall be charged for inspection (with the permission of the Officer in charge) of the Enquiry Proceedings or Register or Property Register of a City Survey or Village Records by an Officer of the Panchayat established or deemed to have been established under the Bombay Village Panchayats Act, 1933, for the purposes of such Panchayat :

Provided further that no fee shall be charged for the inspection of village records by an officer or a member of any Co-operative Society for the business of the Society.

II.—Extracts and Copies.

136. *Uncertified copies.*—(1) No uncertified copy or extract shall be obtainable of or from any documents other than those prescribed in rule 135, nor otherwise than under this rule.

(2) Any person may himself or by an agent make a copy of any public document or of any portion of any public document of which he has duly obtained inspection, but no copy so made shall be certified by any public officer.

137. *Village accountants to grant certified copies of certain records.*—(1) So long as the originals are in their charge, all village accountants, and in the cities surveyed under section 131 all City Surveyors, shall themselves receive and grant applications for certified copies of any serial number (entry) in the record of rights, register of mutations (Property Register) or of tenancies, or of a map of a survey number or sub-division thereof.

(2) The Collector may, in his discretion in respect of his whole district or any part thereof, also empower village accountants to receive and grant applications for certified copies of village forms, Nos. (old) 1, 3, 5, 6, 9, 11, 13, 14 and 18 ; (new) Nos. I, III, VII-XII combined, VIII-A and B, IX, XI, XII, XIV and XV, and of orders for levying miscellaneous land revenue.

(3) Such copies shall after comparison with the original be certified by the accountant as true, and given to the applicants direct within ten days from their application.

138. *Mamlatdars generally to grant certified copies of village papers.*—Except as provided in rule 137 every application for a certified copy of any public document in the charge of a village accountant shall be made to the Mamlatdar to whom he is subordinate, who shall cause the copy to be prepared, compared with the original, and signed in token of correctness by the village accountant. The copy shall then be certified and made over to the applicant by the Mamlatdar.

139. *Officers in charge of document generally to grant certified copy.*—In all other cases the officers in charge of any public document described in rule 135 shall, and in the case of any public document or portion thereof other than those described in rule 135 may, cause to be prepared and give certified copies of the same or of any portion thereof under his own signature to any person applying for such copy on payment of the fees thereinafter prescribed: The officer in charge of a map of a survey number or sub-division of a survey number prescribed under clause (*a*) of section 135-B on the basis of survey by plane-table shall, at the written request of an applicant, and on payment of the additional fees hereinafter prescribed in this behalf, cause the scaled-off perimeter measurements to be shown on the copy of such map to be given to the applicant after first recording these measurements on the original, and shall clearly state both on such copy and on the original that the measurements shown are not the measurements taken in the field (bandh-maps) but have been scaled off the plane-table plan in the office.

Provided that (*a*) no copy shall be granted of any record, map or plan which has been printed or lithographed and published under the authority of the State Government and is on sale; but small extracts of not more than five fields or plots may be granted under rule 142 (5B) and (6);

(*b*) that no copy of any document is to be given in any case in which the grant would be prejudicial to the public interest.

140. *Receipt to be endorsed on copy.*—On every certified copy or extract granted under these rules and delivered otherwise than through the agency of the value payable post there shall be endorsed by the officer who receives the fees for the same a receipt in the following form:—

Received Rs. as. as fee for this certified copy.

Dated of 19

(Signed) A. B.

140-A. *Officers in charge of certified copies to grant true copies of such copies.*—Notwithstanding anything contained in rules 136 to 140 every officer in charge of a certified copy of any public document shall on an application made to him by any person prepare and give to him a true copy of such certified copy of the document under his own signature on payment of the fees hereinafter prescribed. On every such copy it shall be clearly stated by such officer that it is a true copy of the certified copy of the document. When such copy is delivered otherwise than through the agency of the value payable post there shall be endorsed on it by the officer who receives the fee for the same a receipt in the following form:—

Received Rs. as. , as fee for this true copy of the certified copy.

Dated of 19

III.—Searches.

141. *Search fees when to be charged.*—When an application is made for an inspection or copy of any public document or of any portion of a public document and such application does not distinctly describe the number, date and nature of the document required; or if the description given in such application is incorrect, and it shall in consequence be necessary for the officer in charge of the document to search his records in order to find it, a fee, at the rate hereinafter prescribed, shall be payable by the applicant for such search whether the inspection or copy for which he applies, on examination of the said document by the said officer, be granted or not.

IV.—Fees.

142. *Fees.*—(*a*) The following fees shall be levied in cash under these rules :—

(1) For an inspection granted under rule 135 for each day on which inspection is made.	Twelve annas an hour for each applicant subject to a minimum of Rs. 1-8-0, to be paid in advance : Provided that a fee of annas 6 per hour subject to the maximum of Rs. 1-8-0 per day, shall be charged for the inspection of any document which is in the charge of a village accountant. Such fee shall be paid in advance.
(2) For every certified copy of a public document not falling under Articles 3, 4 and 5 of this table—	
(*a*) If the original be in English, for every 25 words or fraction of 25 words :	Nine pies.
(*b*) If the original be in the vernacular, for every 33 words or fraction of 33 words :	Nine pies.
(*c*) (*i*) for examining or comparing 100 words or fraction of 100 words, whether the original be in English or the vernacular :	Nine pies.
(*ii*) for comparing copies of maps, etc., under Articles (5), 5 (B), (6) and (7) out of the copy fee there will be credited as comparing fee :	One-fourth.
(*d*) if the original be in a tabular form, whether in English or the vernacular :	Twice the rates, respectively, named in clauses (*a*) and (*b*).
(*e*) if the copy be given on a printed form for every sheet or page of forms used :	Three pies *plus* the fees at the rates herein prescribed for the manuscript additions made on the form.
(*f*) for each form of extract of a City Property Register :	Two annas.

(*g*) when no printed form is supplied or available, for each sheet of foolscap paper used in preparing the copy other than that of a map or plan under Articles (5), 5 (B), (6) and (7) :	Three pies.
(3) For every certified extract from a register of alienations granted under section 53 :	One anna for every rupee of the amount or alienated revenue, or if the sanad lost or destroyed had been granted under Bombay Act IV of 1868 or under section 133, a sum equal to one-half of the survey fee which the holder of the building site included in the sanad would be liable to pay under section 132 if not exempted by the second paragraph of that section: provided that the fee shall in no case exceed Rs. 10 or be less than 8 annas.
(4) For every certified copy of a serial number (or entry) in the record of rights, register of mutations, or either part of the combined form V. F. VII-XII and for every Holding Sheet in V. F. VIII-A (including the printed form), and in villages to which rule 137 (2) applies for every certified copy of each entry in the forms named, or for each khata in the V. F. VIII-B : provided that there shall be no charge for correcting the Holding Sheet at any time during the 5 years for which it is current :	One anna.
(4-A) For every certified copy of the whole of the combined form V. F. VII-XII.	Two annas.
(4-B) (*i*) For every certified copy of the tabular annewari statement of a village with the annewari decision worked out therein.	Five annas.
(*ii*) For every certified copy of the decision of the Collector or Mamlatdar not embodying such a form, or of the opinion of the village committee as to the anna valuation.	Two annas.
(5) For every certified copy of a map of a survey number or sub-division of a survey number or of any (uncoloured) map of any immovable property prepared under clause (*a*) of section 135-G, or of an entry in a City Property Register :	Two annas.

(5-A) For showing the scaled-off perimeter measurements on any certified copy of a map a survey number or sub-division of a survey number under article (5)—	
(*i*) if applied for at the time of the measurement of the survey number or sub-division of a survey number.	Two annas.
(*ii*) if applied for at any time thereafter.	Four annas.
(5-B) Subject to proviso (*a*) to rule 139 for every certified copy of a map or plan of a non-agricultural survey number or sub-division of such survey number in the Bombay Suburban District.	
(6) Subject to proviso (*a*) to rule 139 for every other certified copy of a map of a survey number or of a sub-division or of a field or of any ordinary (uncoloured) map or plan of any immovable property, or extract of City Survey map, for each field or plot : not falling under article (5-B) of this table.	Eight annas.
(7) For every certified copy of a map or plan or of any portion of a map or plan not falling under Article (5), (5-B) or (6) of this table :	Such fee not exceeding fifteen rupees, and not less than one rupee, as the officer who certifies the copy shall determine : provided that no fee exceeding Rs. 5 shall be charged by any officer subordinate to a Collector except with the permission of the Collector, or by an Officer of the Land Records Department except with the permission of the Superintendent of Land Records, to whom he is subordinate.
(7-A) For every true copy of a certified copy.	The same fee as for a certified copy.
(8) For every search.	One rupee for each year of which the records are searched :
	Provided that in the case of the Alienation Office Records a fee of Rs. 5 shall be charged for each Rumal searched subject to a nmiimum of Rs. 5 for every such search.

(9) For every authenticated translation of orders, and the reasons therefor, and of exhibits in formal or summary inquiries under the Code :—	
(*a*) for the first 100 or fraction of 100 words :	Eight annas.
(*b*) for every subsequent 100 or fraction of 100 words :	Four annas.

Provided that—

(*a*) when any fee is required to be recovered through the agency of the value payable post, postage and postal commission shall be levied in addition, and when the total amount of fee together with postage and commission includes a fraction of an anna a whole anna shall be levied in place of the fraction :

(*b*) any revenue officer shall be entitled to receive free of any charge a certified copy of the final order recorded in his own case under section 33.

(*aa*) A surcharge of 25 per cent. shall, with effect from 1st October 1947, be levied on all copying, comparing and translation fees leviable according to rule 142(*a*) and added to the total charges for the preparation of certified copies.

(*b*) While recovering copying and comparing fees, any amount less than six pies shall be remitted, and six pies or more shall be rounded to the extent of whole anna.

143. *Fees how to be paid.*—Every fee payable in accordance with the foregoing table shall either be paid in advance or recovered in pursuance of a specific request through the agency of the value payable post.

V.—Miscellaneous.

144. *Application how to be made.*—Every application must be made in writing and except in the case of an application for inspection made to a village accountant must be duly stamped. The application may contain a request that the copy, extract, or translation, be forwarded by value payable post (unregistered book-packet) to any Post Office which is also a Money Order Office.

145. *Stamp duty or court-fee payable in addition.*—Nothing in these rules affects the provisions of the Stamp Act (II of 1899) or Court Fees Act (VII of 1870). The Stamp duty or court-fee with which an application, copy or extract made or furnished under these rules may be chargeable is in addition to the fees prescribed herein and care is to be taken that the requirements of the Stamp Act and Court Fees Act are properly fulfilled in respect of every such application, copy or extract.

FORM A.

[Rule 19-A(*ii*).]

Rainfall recorded at , *district* , *for the years*

Year.	Early rain (1st January to 10th April).		Ante-monsoon (11th April to 4th June).		Monsoon Kharif (5th June to 14th August).	
	Fall. Inches.	Rainy days. No.	Fall. Inches.	Rainy days. No.	Fall. Inches.	Rainy days. No.
Average ..						

Monsoon Rabi (15th August to 21st October).		Late rains (22nd October to 31st December).		Total.		Remarks.
Fall. Inches.	Rainy days. No.	Fall. Inches.	Rainy days. No.	Fall. Inches.	Rainy days. No.	

N. B.—The statistics should be collected for the last 30 years.

OFFICE OF THE CONSERVATOR OF FORESTS, BOMBAY WORKING PLANS

FORM A-1.

[Rule 19-A (*vi*).]

Details of population according to occupation.

Agricultural population.				
Having interest in land.		Labourers.	Total.	N. A. population.
Tenants and sub-sharers.	Other land holders.			
1	2	3	4	5

N. B.—The figures at the time of the last settlement should first be given. Below them the latest figures available should be mentioned.

FORM A-2.

[Rule 19-A (*vii*).]

Agricultural stock of the Government villages in the Taluka of the District

During the year 19

Number of villages.	Cattle.			
	For plough.		For breeding.	
	Oxen.	He Buffaloes.	Bulls.	Bull Buffaloes.
1	2	3	4	5

Cattle—*contd.*						Total.
For other purposes.		Milch cattle.		Young stock.		
Oxen.	He Buffaloes.	Cows.	She Buffaloes.	Calves.	Buffalo calves.	
6	7	8	9	10	11	12

Horses and ponies.	Sheep.	Goats.	Plough.		Carts.		Cropped land per pair of plough cattle. Acre.
			Small.	Large (i.e. of over 2 cattle.)	For passengers.	For produce and goods.	
13	14	15	16	17	18	19	20

N.B.—Figures at the time of the last Settlement should first be given. Below them the latest figures available should be mentioned.

FORM A-3.

[Rule 19-A (*viii*).]

Details of cultivation and crops of the Taluka of the District for the year.

Number of villages in each group.	Cultivated and uncultivated area					
	Gross area sown (T F. XX).	Deduct twice cropped area.	Deduct unassessed land sown.	Net assessed cropped area.	Add fallow land.	Total area occupied for cultivation.

Cultivated and uncultivated area—*contd.*							Details of column 2. Cereals and pulses.				
Cultivable waste unoccupied.			Not available for Cultivation.								
Assessed.	Unassessed.	Forest.	Other including uncultivable.	Gross area.	Rice.	Wheat.	Barely.	Juwar.	Bajri.	Ragi.	Maize.

(*contd.*)

FORM A-3—(*contd. from page 91*)

	Details of column 2. Cereals and Pulses—(*contd.*)										
	Gram.	Mug.	Udid	Math.	Val.	Chawali.	Kulthi.	Watana.	Masur.	Other Cereals and Pulses.	Total.

Condiments and Speces.

Cardamom.	Chillis.	Ginger.	Turmeric.	Fennel.	Coriander.	Cummin.	Garlic.	Others.

(*contd.*)

FORM A-3—(*contd. from page 92*)

	Starches—Arrowroot.	Sugars.		Oil Seeds.					
		Cane.	Palm trees.	Linseed.	Til.	Rape and Mustard.	Groun d nut.	Cotton seed.	Cocoa-

Oil Seeds—(*contd.*)				Fibres.				Dyes	
Safflower	Nigerseed	Others	Total	Cotton.	Bombay hemp.	Hemp	O thers	Indigo	Others

(*contd.*)

FORM A-3—(*concluded from page 93*)

	Drugs and Narcotics.								Fodder.
	Coffee.	Tea.	Tobacco.	Indian Hemp (Ganja).	Betel leaves.	Betel nut.	Ajwan.	Total.	

Fruits and vegetables including root crops.		Miscellaneous.		Grass and Babuls.	Fallow details (as required).					Remeks
Gavar.	Others.	Food.	Non-food.		Short rain.	Prickly pear and weeds.	Salt efflores-cence.	True Rotation fallow.	Total.	

FORM A-4.

[Rule 19-A(*viii*).]

Details of occupied, cultivated, fallow, etc., lands in the villages of the taluka, district , year by year from to .

Year.	Total.	Occupied area of which		Government waste.	Forest.	Other.	Gross area.	Remark.
		Cultivated.	Fallow.					
1	2	3	4	5	6	7	8	9

N.B.—Figures for the last 30 years should be given.

FORM A-5.

[Rule 19-A(*ix*).]

Statement showing agricultural wages prevalent in *Taluka,*

district *from* *to* .

Years.	Agricultural wages.
	Rs. a. p.

N.B.—Figures for the last 30 years should be given.

FORM A-6.

[Rule 19-A(*x*).]

Prices prevalent in the *Taluka, District*

from *to*

Year.	Retail prices.					Wholesale prices.				
	Seers of 80 Tolas per Rupee.					Rupees per Maund of 3,200 Tolas.				
	[For crops grown in the Taluka and referred to in Rule 19-1].									
1	2	3	4	5	6	7	8	9	10	11

N.B.—Figures for the last 30 years should be given.

FORM A-7.

[Rule 19-A (*xiii*).]

Leases of $\frac{\textit{dry crop}\,\dagger}{\textit{rice}}$ / $\frac{\textit{garden}}{\textit{mixed}}$ *lands in the villages of the Tāluka District.*

Serial Number in Form A-9.	Name of Village.	Area of land leased.	Assessment.	Rent.	Percentage of rent represented by the assessment.	Remarks.
	Group I ..					
	Averages per acre					
	Group II ..					
	Averages per acre					
	Group III ..					
	Averages per acre					
	Total for taluka.					

†*N.B.*—Information about dry crop, rice, garden lands, etc. should be compiled in separate forms.

FORM A-8.

[Rule 19-A (*xiv*).]

Selling value of $\frac{\text{dry crops §}}{\text{rice}}$ / *garden* / *mixed* *lands in the Villages of the*

Taluka, *District*

Serial number in Form A-9.	Name of village.	Area of and sold.	Assessment.	Sale price.	Number of times the assessment represented by the price.	Remarks.
	Group I.					
	Averages per acre.					
	Group II.					
	Averages per acre.					
	Group III.					
	Averages per acre.					
	Total for taluka.					

§*N.B.*—Information about dry crop, rice, garden lands, etc., should be complied in separate forms.

FORM A-9.

(Rule 19-B.)

Effect of Revision Settlement proposals on Government occupied land in the taluka of in the district of

Serial No.	Name of village.	By former Settlement.			
		No. of Group.	Standard rates.		
			Dry crop.	Rice.	Garden.
1	2	3	4	5	6

Dry crop.			Rice.		
Area.	Assessment.	Average.	Area.	Assessment.	Average.
7	8	9	10	11	12

By former Settlement—*contd.*

Garden.			Total.		
Area.	Assessment.	Average.	Area.	Assessment.	Average.
13	14	15	16	17	18

By Revision Settlement.

Standrad rates.			Dry crop.		
Dry crop.	Rice.	Garden.	Area.	Assessment.	Average.
19	20	21	22	23	24

(*contd.*)

FORM A-9—(*concluded*)

By Revision Settlement—*contd.*					
Rice.			Garden.		
Area.	Assessment.	Average.	Area.	Assessment.	Average.
25	26	27	28	29	30

By Revision Settlement—*contd.*					
Total.			Percentage increase or decrease.	Name of village.	Serial No.
Area.	Assessment.	Average.			
31	32	33	34	35	36

FORM A-10.

(Rule 19-D.)

Notice under section 117J(2) of the Bombay Land Revenue Code, 1879.

Notice about the standard rates proposed by the settlement officer.

It is hereby made known to the people of the undermentioned villages of taluka District that the revision of the assessment of the lands of the said villages used for agriculture is about to be effected and that it is proposed to divide the said villages into the following groups the existing and proposed standard rates in each group being as shown, against it in the following list:-

—	Name of villages in the group.	Standard rates according to existing settlement, per acre.			Standard rates proposed by revision settlement, per acre.		
		Dry crop.	Rice.	Garden.	Dry crop.	Rice.	Garden.
		Rs. a. p.	Rs. a. p.	Rs. a. p.	Rs. a. p.	Rs. a. p.	Rs. a. p.
Group I ..							
Group II ..							
Group III ..							

Reasons for alteration in the rates:

The result so far as the village of is concerned is that the assessment in the village is raised/lowered by annas in the rupee.

A copy of the translation of the Settlement Officer's report together with its appendices is also posted along with this notice in the village chavdi/other public place and at the taluka kacheri and is open to the inspection of any person interested.

Any person may submit to the Collector objections in writing to the proposals contained in the settlement report within three months from the date of this notice.

Any person feeling aggrieved by the Report may within a period of two months from the date of this notice apply to the State Government to refer the report to the Bombay Revenue Tribunal after depositing a sum of Rs. 100 in a Government Treasury on account of costs.

Dated

Collector

FORM A-11.

(Rule 19-G.)

Notice under section 117-O of the Bombay Land Revenue Code, 1879.

Whereas the Government of Bombay has been pleased to sanction, under sub-section (2) of section 117-L of the Bombay Land Revenue Code, 1879, the revised/original settlement of assessment of such lands as are now actually used for the purposes of agriculture alone and of unoccupied cultivable lands (but excepting lands classed,-

as pot kharab) in the village / below mentioned villages of the taluka, notice is hereby given under section 117-O of the said Code that the said assessments calculated according to the standard rates as noted below / (*in the accompanying Akarband) shall be levied from years from and remain in force for a term of to , §subject to the provisions of para. 4 below.

Class of land.	Standard rate.	†Approximate increase or decrease in the rupee of existing assessment.
	Rs. a. p.	As. pies.
Dry crop		
Rice		
Bagayat		

2. Government hereby reserves to itself the power to assess six months after giving a notice as required by section 117-Q any land to additional land revenue during the term of this settlement for additional advantage accruing to it from water received on account of the construction of new irrigation works or improvements in existing irrigation works completed after the State Government directed the settlement under section 117D but not effected by or at the expense of the holder of the land and for which no water rate is levied under the Bombay Irrigation Act, 1879.

3. Exemption under section 117N (*1*) is hereby granted to all lands / lands noted below from assessment for any advantage / advantage specified below accruing to it from water.

Village.	Kind of land.	Kind of advantage and source of water.

This exemption is liable to be withdrawn after six months' notice as required by section 117N (*2*).

* To be substituted for the word 'below' in original settlements and if the classification basis is altered at the time of revised settlement.

§ The words underlined in para. 1 and the whole of para. 4 may be retained, only when Government directs that the provisions in question shall apply to any settlement.

† Omit in the case of original settlements or when the classification basis is altered at the time of revised settlement.

*4. It is also hereby declared under section 117M(*1*) that the provisions of sub-sections (*2*), (*3*) and (*4*) of 117M shall apply to this settlement and that the standard rates have been fixed with reference to the following prices of the agricultural produce noted below and that the assessments fixed shall be subject to a surcharge or rebate according to variation in the prices of these articles in accordance with rules 19-K and 19-L.

Name of produce.	Price in rupees per maund.

5. In addition to the assessment, a cess not exceeding such rates as may be allowed by law shall be levied under the Bombay Local Boards Act, 1923, or any other law for the time being in force, for the purpose of providing funds for expenditure on objects of local public utility and improvement.

†6. The reservations respecting the right of Government to trees as made by any general notification at the time of, or after the previous survey settlement and reproduced in the margin, or as made byany express [ ] order at the time of such survey settlement and recorded in the Settlement Records, are hereby continued. All other rights over trees are conceded to occupants.

FORM B [Rule 29 (1)].

A Form of Notice under section 37 (2), and summons under sections 189-190.

To

A. B.

Whereas (*here describe the property or right in or over any property*) is claimed by the State Government (or by C. D. against the State Government) notice is hereby given that an enquiry will be held by me in order to decide the said claim.

You are hereby required to attend before me either in person or by a duly authorized agent at o'clock of the noon (at the site in dispute or) at my office (camp at in the taluka) on the day of 19 at which time and place an enquiry into the same claim will be made.

And you are hereby required to produce before me at the abovenamed time and place any documents or evidence you may wish to be heard.

If you fail to attend in person or by a duly authorized agent in pursuance of his notice the abovementioned claim will be decided in your absence.

Dated this day of 19 .

(Signed)

Desigantion of Officer.

* The words underlined in para. 1 and the whole of para. 4 may be retained only when Government directs that the provisions in question shall apply to any settlement.

†For para. 6 in the case of original settlements substitute the following :—

"6. The right of Government to trees standing in lands which are now occupied is hereby conceded to the occupants thereof subject to the general exceptions entered in the margin and the special exceptions inscribed in the Settlement Record."

FORM C [Rule 29 (2)].

Whereas in accordance with a notice duly issued and served under rule 29(1) of the Land Revenue Rules an enquiry was held by me on
and an order was passed on

Notice is hereby given to all persons concerned and to (*here specify the person to whom this notice is directed*) that my decision and order is that :—(*here summarise he order, and define the property or right to which it relates*).

Dated this day of 19

(Signed)

Survey Officer,

or

Collector.

FORM D (Rule 32).

FORMS OF SANAD FOR REVENUE-FREE GRANTS OF LAND FOR RELIGIOUS, CHARITABLE OR EDUCATIONAL EDIFICES OR INSTITUTIONS.

(SANCTIONED BY G. R. 7010 OF 1905).

(To be used where the land is granted by the State Government).

To

A. B.

Whereas the State Government have been pleased to grant revenue-free to you, *A. B.*, the possession of the below-mentioned piece of land situated in the village of in the taluka for the purpose of

(namely)—

All that piece of land bounded on the North by , on the South by , on the East by ,and on the West by ,and measuring from North to South , and from East to West , comprising square in superficial area, be the same more or less, and bearing No. in the Land Records.

It is hereby declared that the said land shall be continued $\frac{\text{for ever}}{\text{for a term of years}}$ free of all claim on the part of the State Government for rent or land revenue to whoever shall from time to time be the lawful holder or manager of the said , [(a) on the condition that the said land shall in all respects be made ready for and shall be fully used for the purpose or purposes for which it was granted before the day of 19 and that neither the said land nor any building erected thereupon shall at any time, without the express consent of the State Government, be

diverted either temporarily or permanently to any other than the aforesaid purpose, and that no change or modification shall be made of such purpose and that neither the said land nor any building erected thereon shall be so used as to yield a profit to the grantee and that in the event of any such unauthorized diversion, change or modification being made, or in the event of the said land or any building erected thereon yielding a profit to the grantee the said land shall thereupon, in addition to the assessment to which it becomes liable under section 48 of the Bombay Land Revenue Code, 1879, become liable to such fine as may be fixed in this behalf by the Collector under the provisions of section 66 of the said Code, or other corresponding law for the time being in force relating to the recovery of land revenue, as if the land, having been assessed for purposes of agriculture only, had been unauthorizedly used for any purpose un connected with agriculture (a)] and in any such event as foresaid, or in the event of failure to make the land ready for and to use it fully for the purpose or purposes for which it is granted before the aforesaid day of 19 or in the event of the land being required by the State Government for any public purpose, a declaration in respect of which under the signature of the Commissioner that it is so required shall as between the said holder or manager and the State Government be conclusive, or in the event of the land being notified by the State Government for acquisition under Act I of 1894, it shall be lawful for the State Government, on causing six months' previous notice in writing to be given to the said holder or manager, to take one of the two following courses (namely), either—

(1) to require that the said land be vacated and delivered up to the State Government free of all claims or incumbrances of any person whatsoever,

or (2) to resume and take possession of the said land and any buildings, erected or works executed thereon, free of all claims and incumbrances of any person whatsoever, on payment of compensation not exceeding the following amount, namely :—

(*a*) the amount (if any) paid to the State Government for this grant, and

(*b*) the cost or value at the time of resumption, whichever is the less, of any buildings, or other works authorizedly erected or executed on the said land by the said grantee.

**

This grant is made subject to the reservation of the right of Government to all mines and mineral products and of full liberty of access for the purpose of working and searching for the same, with all reasonable conveniences.

This sanad is executed on behalf of the Governor of Bombay by the Collector of , this day of 19 .

(Signed)

Seal of the Collector.

Collector.

** If there be any further conditions, add here the words "and subject to the following further special conditions namely :—"

FORM DD (Rule 32-A).

Form of lease of land granted to educational institutions or local bodies to be used as a playground or for other recreational purposes and for Gymnas [$\frac{ia}{iums}$]

To The Governor of Bombay.

This is to certify that of (hereinafter called "the lessee") has, subject to the provisions of the Bombay Land Revenue Code, 1879 (Bom. V of 1879), and the rules made thereunder and subject of the conditions hereinafter specified, been allowed by the $\frac{\text{Collector of}}{\text{Commissioner Division}}$ hereinafter called $\frac{\text{"the Collector"}}{\text{"the Commissioner"}}$ on behalf of the Governor of Bombay (hereinafter referred to as "Government"), to occupy, for the purposes of a $\frac{\text{playground}}{\text{gymnasium}}$ and/or for a period of years commencing from the day of 19 (hereinafter called "the said term") a plot of land situated in $\frac{\text{village}}{\text{town}}$ of , taluka , district , bounded on the North by , on the South by on the West by and on the East by bearing $\frac{\text{C. T. S. No.}}{\text{S. No.}}$ and measuring about $\frac{\text{Sq. yds.}}{\text{gunthas}}$ and of the following shape and of the following dimensions as shown in the map hereto annexed.

The conditions of the lease are as follows:—

(1) The lessee shall pay to Government for the said plot of land on the first day of August every year in advance the annual rent of rupee one together with the local fund cess as may be levied thereon from time to time under section 93 of the Bombay Local Boards Act, 1923 (Bom. VI of 1923).

(2) The lessee shall not erect any structure upon the said plot of land save with the previous permission in writing of the Collector.

(3) The lessee shall not use the said plot of land except for the purpose of a $\frac{\text{playground}}{\text{gymnasium}}$ and/or

(4) The said plot of land and all structures thereon shall be subject to municipal taxation and to any taxation for local purposes which is or may hereafter be imposed and shall also be subject to any assessment, tax, cess or any other dues which may be levied in respect of the said plot of land or any of the structures thereon, of the nature contemplated in the second paragraph of section 45 of the Land Revenue Code or any other law for the time being in force.

*(5) In the event of the lessee's† ceasing to be recognised by the $\frac{\text{Educational Department of Government}}{\text{Government}}$ the lease shall be deemed to have terminated.

* To be inserted in case of an educational institution or a gymnasium.

† Name of Educational Institution or Gymnasium, as the case may be, to be inserted.

(6) The lessee shall permit the Government Officers authorised in this behalf by the Collector at all reasonable times to enter upon and inspect any part of the said plot of land.

(7) The lessee shall not sub-let or in any other way encumber the said plot of land or any portion thereof.

(8) If, in the opinion of the Collector, the land is required for the purposes of Government or any local body, the Collector may at any time terminate this lease by giving to the lessee one calendar month's notice in writing.

(9) In the event of the lease being terminated under any of these conditions the lessee shall not be entitled to claim any compensation on account of the termination of the lease. The lessee shall, if the lease is terminated under clause 8, before the expiry of the period of the notice given under that clause and in other cases within such period as the Collector may fix, remove any structure or structures standing on the said plot of land at his own expense and on the expiry of the said period shall deliver possession of the said plot of land to the Collector in the same condition in which it was at the commencement of the tenancy.

(10) The lessee shall at the expiration of the said term deliver quiet and peaceful possession of the said plot of land to the Collector in the same condition in which he took it, unless the lease is renewed for a further term upon such conditions as the Collector with the approval of the Commissioner / Commissioner thinks fit.

(11) Failure to comply with any of the above conditions of the lease or with any provisions of the said Land Revenue Code or of the Rules thereunder shall render this lease liable to cancellation by the Collector, who may thereupon resume the said plot of land and summarily evict the lessee without notice or payment of any compensation whatever or may, in lieu of such resumption and without imposing any further penalty, order the removal within a period fixed by him of any building erected thereon contrary to condition (2) of this lease and on such removal not being carried out within the said period may cause the same to be carried out at the expense of the lessee; and it shall be in the sole discretion of the Collector, subject to the orders of Government or the Commissioner, to adopt either one or other of the above remedies as may seem desirable to him under the circumstances.

(12) In this lease the words "the lessee" shall include the lessee, his heirs, successors, legal representatives and permitted assigns and the word "Collector" shall include the Collector of the District for the time being and any other officer whom Government may appoint to exercise the powers of the Collector under this lease.

This lease is executed on behalf of the Governor of Bombay by and under the hand and seal of the Collector of the District, this day of one thousand nine hundred and

Signed

Collector

In the presence of—
(1)
(2)

Seal.

Accepted by me
Annexure : Map.

FORM E (Rule 35).

(To be used where the land is not granted by the State Government.)

To

A. B.

Whereas, in consideration of your having built (or undertaken to build, *as the case may be*)* for a public/charitable purpose, namely on the piece of land hereinafter described, which is your property, the State Government have been pleased, at your request, to exempt the said piece of land from liability to rent or land revenue.

It is hereby declared that the said land shall be continued $\frac{\text{for ever}}{\text{for a term of years}}$ free of all claim on the part of the State Government for rent or land revenue to whoever shall, from time to time be the lawful holder or manager of the said , [Insert "(*a*).....(*a*)" as in Form D.] [If there be any further special conditions, here add: "and subject to the following further special conditions, namely":—]

The piece of land herein referred to is situated in the village of in the taluka, and is bounded on the North by , on the South by , on the East by and on the West by , and comprises about square in superficial area, be the same more or less, and bears No. in the Land Records.

This sanad is executed on behalf of the Governor of Bombay by the Collector of , this day of 19 .

Seal of the Collector.

(Signed)

Collector.

FORM F (Rules 37, 43 and 52).

FORM OF AGREEMENT TO BE PASSED BY PERSONS INTENDING TO BECOME OCCUPANTS.

To the Mamlatdar of

I, *A. B.*, inhabitant of in the taluka, hereby accept the right of the occupation of the land comprised in Survey No. (or of the building site hereinbelow described, or otherwise as the case may be), in the village of in the taluka, and I pray that my name be entered in the Government records as the occupant of the said land.

*The nature of the building and the extent of the public interest in it should be clearly set forth, as for instance "a temple with a Dharmashala attached, for the use of the Digambar Jain community."

The said land has been granted to me subject to the provisions of the Bombay Land Revenue Code, 1879, and of rules in force thereunder, in perpetuity†, from the day of 19 ; §and I undertake to pay the land revenue from time to time lawfully due in respect of the said land (or I undertake, whenever the State Government shall see fit to discontinue the exemption of the said land from payment of land revenue, to pay such revenue as may be lawfully imposed thereupon under the orders of the State Government or otherwise as the case may be).

If I contravene any of the conditions of the grant, the Collector may, without prejudice to any other penalty to which I may be liable under the provisions of the said Code—

(*a*) continue the said land in my occupation on payment of such fine and/or assessment as he may direct; and

(*b*) direct the removal or alteration of any building or structure erected or used contrary to the conditions of the grant within a time prescribed in that behalf by the Collector, and on such removal or alteration not being carried out within the prescribed period, cause the same to be carried out and recover the cost of carrying out the same from me as an arrear of land revenue.

Dated the day of 19 at
Written by (Signed) *A. B.*

We declare that *A. B.*, who has signed this agreement, is to our personal knowledge the person he represents himself to be, and that he has affixed his signature hereto in our presence.

(Signed) *C. D.*
(,,) *E. F.*

We declare that to the best of our knowledge and from the best information we have been able, after careful inquiry, to obtain the person who has passed this agreement is a fit person to be accepted by the State Government as responsible for the punctual payment of the land revenue from time to time due on the above land.

(Signed) G. H., Patel.
(,,) *I. J.*, Village Accountant.

This clause shall be inserted only in cases in which agreement is taken for grant of land for building sites.

FORM F-1 [Rule 37 (4)].

FORM OF AGREEMENT TO BE PASSED BY PERSONS INTENDING TO BECOME OCCUPANTS OF LAND ON IMPARTIBLE TENURE.

To the Mamlatdar of

I, A. B., inhabitant of in the taluka, hereby accept the right of occupation of the land comprised in Survey No. , in the village of in the taluka and I pray that my name be entered in the Government records as the occupant of the said land.

† When not granted in perpetuity delete the words and insert " until the day of 19 ".
§ When land is sold for a fixed period free of land revenue the agreement should end here, and the second endorsement may be omitted.

The said land has been granted to me in perpetuity from the day of 19 , subject to (1) the provisions of the Bombay Land Revenue Code, 1879, and of the rules in force thereunder and to (2) the further condition that I, my heirs, assigns and legal representatives shall not at any time by partition, inheritance, lease, mortgage or otherwise howsoever transfer the said land except as a whole or allow any portion of it to be cultivated, used, or occupied by any other person so as to divide it.

If I fail to perform any of the aforesaid conditions I shall be liable without prejudice to any other penalties that I may incur under the said Code, and the rules made thereunder, to have the said land summarily forfeited by the Collector, and I shall not be entitled to claim compensation for anything done or executed by me in respect of the said land.

*And I undertake to pay the land revenue from time to time lawfully due in respect of the said land (or I undertake, whenever the State Government shall see fit to discontinue the exemption of the said land from payment of land revenue to pay such revenue as may be lawfully imposed thereon under the orders of the State Government or otherwise, as the case may be).

Dated the day of 19 .

Written by

(Signed) *A. B.*

We declare that A. B., who has signed this agreement is to our personal knowledge the person he represents himself to be, and that he has affixed his signature hereto in our presence.

(Signed) C. D.
(,,) E. F.

We declare that, to the best of our knowledge and from the best information which we have been able after careful inquiry to obtain, the person who has passed this agreement is a fit person to be accepted by the State Government as responsible for the punctual payment of the land revenue from time to time due on the above land.

(Signed) G. H., Patel.
(,,) I. J., Village Accountant.

FORM G-1 (Rule 39) (as amended by G. 11514-11).

RECLAMATION LEASE.

Form of lease to be granted to an occupant who takes up land on special terms.

This is to certify that, with the previous sanction of the Commissioner, of has been granted the right of occupation of survey No. in the village of in the taluka for a term of years from the day of 19 , subject to the payment of land revenue as follows (viz.):—

(*a*) for the first years, A. D. 19 to 19 , nil;

*When land is sold for a fixed period free of land revenue the agreement should end here, and the second endorsement may be omitted.—G. R. 4702/24-III of 12-3-1931.

(*b*) for the next years, A. D. 19 to 19 , a reduced assessment of Rs.

The reason for the grant of the said land on the favourable terms aforesaid is that the lessee has undertaken, at his own expense, within a period of from the day of 19 , to carry out to the satisfaction of the following work, whereby the cultivation of the said survey No. will be improved (or rendered feasible *or otherwise as the case may be*), viz. :—

(*Here describe as accurately as possible the work to be executed.*)

The conditions on which this lease is granted are :—

(1) that the lessee shall completely execute the work aforesaid to the satisfaction of the said within the period above mentioned;

(2) that he shall keep the said work when executed in good order and repairs to the satisfaction of the said until the expiry of this lease;

(3) It shall not be lawful to the lessee to partition, bequeath, alienate, assign, mortgage or otherwise charge or encumber any portion of the said land less than the area hereby fixed by the Collector as the economic holding, nor shall any such portion of the said land be liable to seizure, sequestration, attachment, sale or partition by process of a court;

(4) that if the lessee shall fail to perform any of the aforesaid conditions he shall be liable, notwithstanding anything hereinbefore written, to pay the full assessment of the land comprised in this lease amounting to Rs. , for the year or years during which such failure shall take place and it shall be open to the Collector either to cancel the remaining portion of the lease and re-enter upon the land, or to levy full assessment from the lessee for every subsequent year of the term of this lease;

(5) that provided the lease shall not have previously determined under the last preceding condition, the lessee shall be entitled, on the expiry of this lease, to retain the occupation of the land herein comprised, subject to the payment of the full assessment from time to time fixed thereupon under the law and rules in force in this behalf, on his executing an agreement in the form prescribed for persons who intend to become occupants.

This lease is executed on behalf of the Governor of Bombay by the Collector of and under his seal of office, this day of 19 .

Seal.

(Signed)

Collector.

I the aforesaid lessee do hereby accept this lease in the terms and conditions therein mentioned.

Signed by

Lessee.

in the presence of—

FORM G-2 (Rule 40).

Reclamation Lease.

This indenture made the day of 19 between the Governor of Bombay (hereinafter called the Lessor) of the one part and inhabitant of . (hereinafter called the Lessee) of the other part WITNESSETH that the Lessor doth hereby lease unto the Lessee all the Salt Marsh Lands situated in the village of in the Registration sub-district of and in the taluka, the Survey Numbers, Area and Boundaries of which are set forth in Schedule A hereunder written which said Lands were let in the occupation of and are now in the occupation of and are delineated in the Plan attached hereto and signed by the Collector of (hereinafter referred to as the Collector) TO HOLD the said Lands unto the Lessee for the term of 999 years from the day of 19 , paying during the said term unto the Lessor for the said lands save such portion as may be appropriated for Public Roads which portion shall be exempt from payment the yearly Rents following that is to say for the first ten years of the said term the Rent of One Pie if demanded and for the next 20 years, viz., from the day of 19 , till the day of 19 a yearly sum equal to Four annas *per* Acre in such Instalments on such Dates and to such Person as may be from time to time prescribed and designated by the Collector and for such Period if any as shall intervene between the day of 19 , and the date of the first settlement of Assessment hereinafter provided for the yearly sum hereinbefore lastly reserved payable in the manner hereinbefore mentioned AND from and after the first settlement of Assessment hereinafter provided for such sum of Land Revenue as under the Laws or Rules having the force of Law for the time being in force in respect of lands held under Government by ordinary Occupants shall from time to time be found to be payable AND the Lessee hereby covenants and agrees with the Lessor in manner following that is to say FIRST that the Lessee shall at his own expense and with due diligence completely reclaim the lands hereby leased so as to be in a state fit for use for agricultural purposes AND shall so reclaim at least one-half of the said lands within ten years and the whole thereof within twenty years from the day of 19 , respectively and shall maintain such Reclamation during the residue of the term hereby granted AND shall not until the whole of the said Lands shall have been completely reclaimed and rendered cultivable assign or underlet the said Lands or any portion thereof or charge or receive any Tax or Fee for Cattle-grazing upon any portion thereof without the previous consent in writing of the Collector. And that the lessee shall not at any time partition, bequeath, alienate, assign, mortgage or otherwise charge or encumber or allow to be cultivated, used or occupied by any other person, any portion of the said land less than the area—hereby fixed by the Collector as an economic holding in respect of the said lands nor shall any such portion of the said land be liable to seizure, sequestration, attachment, sale or partition by process of a Court. PROVIDED that if any Government Officer duly empowered

in this behalf by the Government of Bombay shall certify in writing that any portion of the said Lands is unreclaimable such portion shall be excluded from the operations of the covenants hereinbefore contained. Provided further that the lessees shall be at liberty during the first ten years to relinquish any portion of the said lands which he cannot reclaim : and such portion shall thereupon be excluded from the operation of the covenants herein contained SECOND that the Lessee shall at his own expense (*a*) keep open the several Roads mentioned and described in Schedule B hereunder written and delineated in the Plan hereunto annexed (*b*) provide and keep in good order to the satisfaction of the Collector such water-ways in and along the Lands hereby leased as may from time to time be required by the Collector (*c*) erect such new Boundary-marks upon the said Lands as may from time to time be required by the Collector and maintain and keep in good repair to the satisfaction of the Collector all such new Boundary-marks as well as all those at present existing thereon, THIRD that the said Lessee shall pay the rents hereinbefore respectively reserved at the times and in manner hereinbefore provided for payment of the same respectively and that whenever any Instalment of the said Rents respectively shall be in arrear, it shall be recoverable from the Lessee as an arrear of Land Revenue under the provisions of the Law for the time being in force in that behalf AND the Lessee shall also pay all Rates, Taxes and other Outgoings (if any) which shall at any time during the continuance of this Lease be payable in respect of the said Premises or any part thereof, FOURTH that from and after the
day of 19 the Lands hereby leased shall be liable to be from time to time surveyed and assessed to the Land Revenue under the Laws or Rules having the force of Law for the time being in force in respect of Lands held under Government by ordinary occupants and thenceforward during the residue of the term hereby granted the Lessee shall hold the said Lands subject to all the provisions of such Laws and Rules and subject also to such of the Covenants and Provisions of this Lease as shall then be capable of continuing effect PROVIDED ALWAYS AND IT IS HEREBY AGREED that if and whenever there shall be a breach by the Lessee of any Covenant, Condition or Provision herein contained the Lessor may re-enter upon the said Lands or upon part thereof in the name of the whole and thereupon this Lease shall determine AND that in case default shall be made in reclaiming the half or the whole of the Lands within the periods respectively hereinbefore prescribed in that behalf the Lessor may re-enter upon the said Lands and determine this Lease under the power in that behalf hereinbefore contained and that if in the opinion of the Collector (whose decision shall be final) the reclamation is not carried on with due diligence during the two years ending on the
day of 19 the Lessor may on or after the said day re-enter upon the said Lands and determine this Lease under the power in that behalf hereinbefore contained AND that notwithstanding anything hereinbefore contained if at any time any portion of the said Lands (other than such portion as may be appropriated for Public Roads) is after being reclaimed used for any purpose unconnected with agriculture, such portion shall be liable to such assessment or altered assessment as may be leviable under the Law or Rules having the force of Law for the time being in force in respect of land which is held for agricultural purposes and subsequently used for purposes unconnected with agriculture and such assessment or altered assessment shall be leviable notwithstanding that any of the periods hereinbefore specified shall not have elapsed AND that the right of the said Lessor to all Mines and Mineral Products and of full liberty of access for the purpose of working and searching for the same with all reasonable conveniences shall be reserved.

AND IT IS LASTLY AGREED that the word "Lessor" in this Lease shall mean the Lessor and his Successors and Assigns and the word "Lessee" shall mean the Lessee and his Legal Representatives.

In witness whereof Esq., Collector of , has, hereunto set his hand and affixed his official seal on behalf of the Governor of Bombay and the Lessee has hereunto set his hand the day and year first above written.

Schedule A above referred to:

Schedule B above referred to:

Signed by the above named
in the presence of _____
_____

Seal of the Collector.

Signed by the above named
in the presence of _____
_____

FORM H (Rule 43).

ALTERNATIVE FORM OF AGREEMENT TO BE PASSED BY PERSONS INTENDING TO BECOME OCCUPANTS, IF THE COLLECTOR SO REQUIRES.

Agreement.

To

The Mamlatdar of

I. A. B., of in the said taluka, agree on behalf of myself and my assigns to occupy the land specified in the Schedule appended hereto on the conditions stated below, and I pray that my name may be entered in the land records as occupant of the said land.

Conditions.

1. I will pay the land revenue from time to time lawfully due in respect of the said land, to wit: as assessment the sum of Rs. (being at the rate of per) for the period of years commencing on , and thereafter I will pay such assessment for such further periods as may from time to time be fixed by lawful authority.

2. Within a period of two years from the date hereof, or within such further period as may be fixed by lawful authority, I will erect on the said land a building (or buildings) of a substantial and permanent character, and of the following

description, and such building (or buildings) will cover not more than one-fourth of the total area of the said land.

(*Here enter description.*)

3. The provisions of the Bombay Land Revenue Code, 1879, and all rules and orders for the time being in force thereunder, shall apply to my occupation of the said land, so far as the same may be applicable and not inconsistent with these conditions.

4. (*a*) Subject to the foregoing conditions I shall be entitled to occupy the said land in perpetuity but if I contravene any of the foregoing conditions the Collector may continue the said land in my occupation on payment of such fine and/or such assessment as he may direct.

(*b*) Notwithstanding anything contained in sub-clause (*a*) above, it shall be lawful for the Collector to direct the removal or alteration of any building or structure erected or used contrary to the provisions of this grant within a time prescribed in that behalf by the Collector, and on such removal or alteration not being carried out within the prescribed period, he may cause the same to be carried out and may recover the cost of carrying out of the same from me as an arrear of land revenue.

The Schedule.

Dated the day of 19

Written by (Signed)

[Declaration, if necessary.]

Then follows the Plan.

NOTE.—This agreement is exempt from Court-fee under item C (24) of the Notification of the Government of India, 4650—10—9—89.

It is also exempt from the payment of stamp duty, under item A-9 of Notification of Government of India, No. 3616, Exc.—16-7-09.

FORM HH.

FORM OF AGREEMENT TO BE PASSED BY PERSONS INTENDING TO BECOME OCCUPANTS OF LAND INCLUDED IN A DEVELOPMENT SCHEME OR IN OTHER SPECIAL CASES (*vide* RULE 43).

Agreement.

The Special Mamlatdar, / The Mamlatdar, , taluka..... District.....

I, A. B., of agree on behalf of myself and my heirs, executors, administrators and assigns to occupy the land specified in the schedule appended hereto (hereinafter referred to as the said land) on the conditions stated below, and I pray that my name may be entered in the land records as occupant of the said land :—

Conditions.

(1) I will pay the land revenue from time to time lawfully due in respect of the said land to wit : as assessment the sum of Rs. (being at the rate of per or at such lower rate as is leviable under the rules

for the time being in force and applicable to such land) for the period of years commencing on and thereafter, I will pay such assessment for such further periods as may from time to time be fixed by lawful authority.

(2) *Use.*—I will use the said land only for building purposes of the nature specified in condition (3) of this agreement.

(3) *Building.*—I will erect and complete on the said land* of a substantial and permanent description; I will in regard thereto duly comply in every respect with the building regulations contained in clauses , etc., of the second schedule hereto ;† (and I will not use, or permit the use of, any of the buildings erected or to be erected on the said land as a shop, or carry on in any of the said buildings any trade or business, other than).

§(4) *Reservation of margin.*—If at any future date the Collector shall give me notice in writing that a strip from the margin of the said land not more than feet in depth is required by the State Government for the purposes of a road, I will, at the expiration of one month after the receipt of such notice, quietly surrender and hand over possession of such strip to the Collector in consideration of receiving from the State Government in exchange and as full compensation therefor a sum equivalent to ( ) times the assessment proportionately payable upon the strip so surrendered.

Provided that, where the materials of any gate, wall, pavement or other such authorised erection or construction on such strip cannot in the opinion of the Collector be removed without appreciable loss, such further compensation on this account shall be paid to me as the Collector may deem fit.

(5) *Liability of rates.*—I will pay all taxes, rates and cesses leviable in respect of the said land.

(6) *Code provisions applicable.*—The provisions of the said Code and all rules and orders for the time being in force thereunder shall apply, to my occupation of the said land, so far as the same may be applicable and not inconsistent with the conditions of this agreement.

(7) *Penalty clause.*—(*a*) If I contravene any of the foregoing conditions, the Collector may, without prejudice to any other penalty to which I may be liable under the provisions of the said Code continue the said land in my occupation on payment of such fine and/or assessment as he may direct.

(*b*) Notwithstanding anything contained in sub-clause (*a*) above, it shall be lawful for the Collector to direct the removal or alteration of any building or structure erected or used contrary to the provisions of this grant within a time prescribed in that behalf by the Collector, and on such removal or alteration not being carried out within the prescribed period, he may cause the same to be carried out and may recover the cost of carrying out the same from me as an arrear of land revenue.

---

* Here insert description of the buildings such as "a residential bungalow and outhouses."

† To be scored out in areas where business premises are permitted.

§ To be omitted where not required.

MAP.

Schedule I.

Length and Breadth.		Total Superficial area.	Boundaries.				Remarks.
North to South.	East to West.		North.	South.	East.	West.	

Schedule II.

(The number of the conditions which are applicable should be entered in condition 3 of the grant; and special conditions should be inserted in continuation.)

1. Buildings may be erected only within the area marked on the map annexed and the remaining area of the said land shall be left as an open space.

2. "Two thirds" of the said land shall ordinarily be left open to the sky and only "one-half" when the land is in the Collector's opinion of a very high value or the buildings are likely to be inhabited by the poorer classes or in areas already densely built over such as bazars and the central parts of towns where the values of lands are very high.

3. No latrine, cesspool or stables shall be constructed on the said land in any place which shall not have been approved for such purpose by the Collector or an officer authorised by him.

4. No building shall be erected in the said land with more than a ground floor and one upper storey.

5. The building erected on the said land shall be used for residential purposes only.

6. No building erected on the said land shall be used as a factory or as a place for carrying on an offensive trade.

7. The grant shall be subject to the following special conditions :—

(*a*)
(*b*) etc. etc.
Dated the day of at
(Signed) A. B.

We declare that A. B. who has signed this agreement, is to our personal knowledge the person he represents himself to be, and that he has affixed his signature hereto, in our presence.

(Signed) E. F.
G. H.

N. B.—1. This document need not be registered.
2. This document is exempt from stamp duty.

FORM I [Rules 37 (3) and 43 (3)].

CLAUSE FOR INALIENABLE TENURE ADDITIONAL TO FORMS F AND H OR OTHER AGREEMENTS.

In cases where the land is granted subject to the conditions that the occupant shall not transfer it in any way to another person without the sanction of the Collector, the following clause should be added in the agreement to be taken from him :—

"The said land has been granted to me subject to the condition to which I hereby assent, namely, that I, my heirs, executors, administrators and approved assigns may not at any time lease, mortgage, sell or otherwise howsoever encumber the said land or any portion thereof without the previous sanction in writing of the Collector."

FORM I-1 [Rule 37 (4)].

FORM OF AGREEMENT TO BE PASSED BY PERSONS INTENDING TO BECOME OCCUPANTS OF LAND ON THE INALIENABLE TENURE.

To the Mamlatdar of

I, A. B., inhabitant of in the taluka, hereby accept the right of occupation of the land comprised in survey No. [or of the building site hereinafter described or otherwise, as the case may be], in the village of in the taluka and I pray that my name be entered in the Government records as the occupant of the said land.

The said land has been granted to me in perpetuity from the day of 19 subject to the conditions hereinbelow mentioned and to the provisions of the Bombay Land Revenue Code, 1879, and of the rules in force thereunder ;

*And I undertake to pay the land revenue from time to time lawfully due in respect of the said land (or I undertake, whenever the State Government shall see fit to discontinue the exemption of the said land from payment of land revenue, to pay such revenue, as may be lawfully imposed thereon under the orders of the State Government or otherwise, as the case may be).

The said land has been granted to me subject also to the further condition to which I hereby assent, namely, I, my heirs, assigns and legal representatives shall not at any time—

(1) partition the said land ;

or

(2) lease, mortgage or otherwise howsoever encumber the said land or any portion thereof without the previous sanction of the Collector, which shall not be given except in respect of the whole land.

If I fail to perform any of the aforesaid conditions I shall be liable without prejudice to any other penalties that I may incur under the said Code, and the rules

*When land is sold for a fixed period free of land revenue this paragraph should end here, and the second endorsement may be omitted.

made thereunder, to have the said land summarily forfeited by the Collector, and I shall not be entitled to claim compensation for anything done or executed by me in respect of the said land.

Dated the day of 19 at
written by (Signed) A. B.

We declare that A. B. who has signed this agreement is to our personal knowledge the person he represents himself to be, and that he has affixed his signature hereto in our presence.

(Signed) C. D.
(,,) E. F.

We declare that, to the best of our knowledge and from the best information which we have been able after careful enquiry to obtain, the person who has passed this agreement is a fit person to be accepted by the State Government as responsible for the punctual payment of the land revenue from time to time due on the above land.

(Signed) G. H.,
Patel.
I. J.,
Village Accountant.

FORM J (Rule 46).

FORM OF AGREEMENT* FOR EXCHANGE TO BE EXECUTED BY VILLAGERS REMOVING TO A NEW VILLAGE-SITE.

Agreement executed the day of 19 by *A.B.* resident of in the taluka :

Whereas the State Government have been pleased to sanction a change being made in the position of the site of the village of in the registration sub-district of , and in pursuance of such sanction the following plot of ground has been alloted to me in the new site in exchange for the ground held by me in the old site, namely, the piece of land bounded as follows, that is to say on the North by , on the South by , on the East by , on the West by , measuring in length from North to South, and in length from East to West, and comprising about square in superficial area and bearing No. in the Land Records.

I do hereby agree, in consideration of the allotment to me of the new piece of land aforesaid, as follows, namely :—

(1) That all my right, title and interest in any land whatsoever, situate within the old site of the said village, shall be deemed to be, and is hereby, surrendered to the State Government, together with the trees standing thereon and all rights over or other benefits arising out of or enjoyed by me in respect of the said land :

* The stamp duty for this agreement is reduced to four annas ; item 10 of Notification of the Government of India, 3616-Exc. 16-7-09. R 7317-09.

(2) That I shall hold the piece of land aforesaid in the new site from the date of this agreement on the same terms and with the same rights and subject to the same liabilities as would apply to my tenure of the ground held by me in the old site, if I continued to be the holder thereof.

In witness whereof I have hereto set my hand the day and year aforesaid.

Written by (Signed) A. B.
Signed and delivered by in our presence.

FORM JJ.

FORM OF LICENCE FOR AERIAL PROJECTIONS, ETC. (e.g. BALCONIES) OVER GOVERNMENT LAND.

This indenture made the day of one thousand nine hundred and between the Governor of Bombay (hereinafter referred to as 'the Government') of the one part and of (hereinafter referred to as 'the licensee') (which expression shall, unless it is excluded by or repugnant to the context, include his heirs, executors, administrators, and assigns) of the other part.

Whereas the Government is possessed of and absolutely entitled in perpetuity free from encumbrances to the piece of land measuring approximately square yards and situate at in the (village) taluka of the district and bearing Survey No. and bounded on the North by on the South by on the East by on the West by and of the shape and approximate dimensions shown in the sketch* hereto annexed (hereinafter referred to as 'the said land');

And whereas the licensee $\frac{\text{has projected balcony}}{\text{wishes to project other aerial projections.**}}$ on the said land.

And whereas the licensee has applied for permission to $\frac{\text{retain}}{\text{project}}$ the said $\frac{\text{balcony}}{\text{projection}}$ over the said land and whereas the Government has by Government Resolution, Revenue Department, No. 1834/24, dated 16th October, 1939, authorized the, $\frac{\text{Collector of}}{\text{Executive Engineer. Division,}}$ hereinafter referred to as $\frac{\text{"Collector}}{\text{"Executive Engineer,"}}$ to grant such permission.

And whereas the $\frac{\text{Collector of}}{\text{Executive Engineer . Division}}$ has agreed to grant such permission on the terms and conditions hereinafter mentioned.

Now, this indenture witnesseth that in consideration of the payment by the licensee of the sum hereby reserved and of the conditions hereafter contained and on the part of the licensee to be observed and performed, $\frac{\text{the Collector}}{\text{the Executive Enginee}}$

---

* *Note.*—The sketch should show clearly the positions of the plot relative to the road boundary the centre line of the road and the nearest mile or furlong stone.

** Here state the nature of other aerial projections.

hereby grants to the licensee permission to $\frac{\text{retain}}{\text{project}}$ the said $\frac{\text{balcony}}{\text{projection}}$ over the said land subject to the following conditions, namely :—

(1) The licensee shall pay to Government every year during the continuance of this licence at the office of the $\frac{\text{Collector}}{\text{Executive Engineer}}$ on the first day of the annual sum of Rs. in cash, the first of such payments to be made on the day of ;

(2) The licensee shall not without the previous permission in writing of the $\frac{\text{Collector}}{\text{Executive Engineer}}$ extend or add to the said $\frac{\text{balcony}}{\text{projection}}$;

(3) The permission hereby granted shall not in any way be deemed to convey to the licensee any right to, or over, or any interest in, the said land or any easement thereof or any right to put up posts or supports on the said land for the said $\frac{\text{balcony}}{\text{projection}}$;

(4) In case the licensee's building to which the said $\frac{\text{balcony}}{\text{projection}}$ is attached falls down or is destroyed by fire, earthquake, storm or as a result of civil commotion or by any other cause whatsoever or is reconstructed, this licence shall immediately determine and the licensee shall not be entitled to claim any right to put up a similar balcony or any similar aerial projection in respect of any building which may be constructed in lieu of the building fallen or destroyed as aforesaid ;

(5) The $\frac{\text{Collector}}{\text{Executive Engineer}}$ may cancel this licence at any time by giving to the licensee one month's notice in writing of his intention and at the expiration of such period this licence shall cease and be void ;

(6) During the subsistence of this licence the said $\frac{\text{balcony}}{\text{projection}}$ shall be deemed to have been constructed and continued by the consent and permission in writing of the Government so that the right of the licensee to any easements on the said land shall not become absolute or indefeasible by lapse of time.

In witness whereof $\frac{\text{the Collector}}{\text{the Executive Engineer,}}$ $\frac{\text{District}}{\text{Division}}$ has on behalf of the Governor of Bombay hereunto set his hand and seal of his office the day and year first above written.

Signature of the $\frac{\text{Collector}}{\text{Executive Engineer}}$ in the presence of—

1

2

I accept the above conditions.

Signature of the licensee in the presence of—

1

2

(*Notes.*—1. This licence requires one rupee stamp and does not require registration.

2. This form is also meant for use by Executive Engineers for grant of such licences in respect of Government land in charge of the Public Works Department. (*Vide* Government Resolution, Home Department, No. 5940/3-II, dated 1st December 1938.)

FORM JJJ.

[Rule 51 (3).]

Form of Sanad in cases where assessment on land in certain city-surveyed areas assessed for agriculture and permitted to be temporarily used for non-agricultural purposes other than building is altered under section 48.

Whereas the land hereinafter described by measurement and by the boundaries specified in the schedule (and delineated in the map hereto appended) and bearing (or forming part of) City Survey No. in the City/Town of in the taluka of entered in the name of, and at present held by , resident of has been hitherto assessed for purposes of agriculture at the rate of ; and whereas the said land has been permitted to be used for a non-agricultural purpose, other than for a permanent building to wit, for (Describe purpose,) and such assessment has thereby become liable, under section 48 of the Bombay Land Revenue Code, 1879 (hereinafter referred to as " the said Code ") to be altered and fixed at a different rate :

Now this is to certify that under the provisions of the said Code and the rules in force thereunder the said land is hereby permitted to be used for the purpose stated above for term of years from 19 and that the amount to be paid as land revenue on the said land has been fixed for the said term of years at [Rupees (words)] [Rs. (figures)] payable in one instalment on . If the permission hereby granted is renewed on the expiry of the said term, the assessment aforesaid shall be liable to revision in accordance with the said Code and the rules and orders for the time being in force thereunder.

In case of a breach of any of the conditions of this sanad, the Collector may, without prejudice to any other penalty to which the holder of the said land may be liable under the provisions of the said Code, direct the removal or alteration of any structure erected or used contrary to the provisions of this sanad within a time prescribed in that behalf by the Collector, and on such removal or alteration not being carried out within the period so prescribed, may cause the same to be carried out and may recover the cost of carrying out the same from the holder as an arrear of land revenue.

Schedule hereinbefore referred to.

Length and Breadth.		Total Superficial area.	Bearing (or forming part of) City Survey No. or Nos.	Boundaries.				Remarks.
North to South.	East to West.			North.	South.	East.	West.	

In witness whereof the Collector of has hereto set his hand and the seal of his office this day of 19 .

Seal.

Collector.

Note.—The Collector has full power to impose any conditions he thinks fit for the erection of temporary structures. Such conditions will be inserted after the schedule.

FORM K (Rule 54).

FORM OF WRITTEN PERMISSION TO OCCUPY LAND TO BE GIVEN BY A MAMLATDAR UNDER SECTION 60.

Permission is hereby given to *A. B.*, inhabitant of in the taluka, to occupy Survey No. (*or* the building-site hereinbelow described *or otherwise as the case may be*), in the village of in the taluka, in accordance with the Sanad granted (*or*, upon the conditions sanctioned by the Collector in his order No. dated).

Dated the day of 19 at

Seal.

(Signed)
Mamlatdar.

FORM KK (Rule 54, Bombay Suburban).

Permission is hereby given to you A. B., inhabitant of , to occupy the building site hereinbelow described in the village of in the taluka in accordance with the conditions sanctioned by the Collector and accepted by you in the agreement dated the day of 19 subject to which this permission is given.

Description of Land.

Plot No. in the Suburban Scheme No.
Dated the day of 19 ,
at

Seal.

(Signed)
Mamlatdar.

FORM L (Rule 74).

FORM OF NOTICE* OF RELINQUISHMENT.

To the Mamlatdar of

I, A. B., inhabitant of in the taluka, the $\frac{\text{occupant}}{\text{holder}}$, of Survey No. (or sub-division No.) or the building-site hereinbelow described (*or otherwise as the case may be*), in the village of in the taluka, hereby give notice under section 74 of the Bombay Land Revenue Code, 1879, that it is my intention to relinquish and I hereby do relinquish the said Survey No. (or building-site, etc.,) at the end of the curent year,§ subject to any rights, tenures, incumbrances or equities lawfully subsistirng in favour of any person (other than the State Government or the $\frac{\text{occupant}}{\text{holder}}$).

Dated this day of 19 at

Written by

(Signed) A. B.

FORM M.

FORM OF SANAD IN CASES WHERE THE ASSESSMENT ON LAND APPROPRIATED TO BUILDING PURPOSES IS ALTERED UNDER SECTION 48.

WHEREAS application has been made to the Collector of (hereinafter referred to as "the Collector" which expression shall include any officer whom the Collector shall appoint to exercise and perform his powers and duties under this grant) under section 65 of the Bombay Land Revenue Code, 1879 (hereinafter referred to as "the said Code" which expression shall where the context so admits include the rules and orders thereunder) by inhabitant of being the registered occupant of Survey No. in the village of in the taluka hereinafter referred to as "the applicant" which expression shall where the context so admits include his heirs, executors, administrators and assigns) for permission to use for building purposes the plot of land (hereinafter referred to as the "said plot") described in the first schedule hereto and indicated by the letters on the site plan annexed hereto, forming part of Survey No. and measuring be the same a little more or less.

Now this is to certify that permission to use for building purposes the said plot is hereby granted subject to the provisions of the said Code, and on the following conditions namely :—

(1) *Assessment.*—The applicant in lieu of the assessment heretofore leviable in respect of the said plot shall pay to the State Government on the day of in each year an annual assessment of Rupees (Rs.) during the thirty (30) years commencing on the day of 19 , or in composition therefor a lump sum of Rupees (Rs.) being

---

* No Court-fee is chargeable, *vide* Court-fees Act II of 1870, section 19 (XI).

§ These notices must be given before the 31st March, or such other date as Government prescribe under section 74 for each district.

twenty times the said annual assessment; and on the expiry of the said period of thirty years, such revised assessment as may from time to time be fix d by the Collector under the said Code:

Provided that where the applicant is a Co-operative Housing Society, it shall be entitled to such exemption from the payment of altered assessment in whole or in part as is permissible under proviso (2) to clause (*a*) of rule 86.

(2) *Use.*—The applicant shall use the said plot only for building purposes of the nature specified in condition (3) of this sanad. He shall not without the previous permission in writing of the Collector, use the said plot or any part thereof for any purpose other than that for which permission to use it has been granted to him.

(3) *Building time Limit.*—The applicant shall within three (3) years from the date hereof, erect and compl te on the said plot* of a substantial and permanent description, and shall in regard thereto duly comply in every respect with the building regulations contained in clauses etc., of the second schedule hereto.

(4) *Liability for Rates.*—The applicant shall pay all taxes, rates and cesses leviable on the said land.

(5) *Penalty clause.*—(*a*) If the applicant contravenes any of the foregoing conditions, the Collector may, without prejudice to any other penalty to which the applicant may be liable under the provisions of the said Code, continue the said plot in the occupation of the applicant on payment of such fine and/or assessment as he may direct.

(*b*) Notwithstanding anything contained in sub-clause (*a*) above, it shall be lawful for the Collector to direct the removal or alteration of any building or structure erected or used contrary to the provisions of this grant within a time prescribed in that behalf by the Collector and on such removal or alteration not being carried out within the prescribed period, he may cause the same to be carried out and may recover the cost of carrying out the same from the applicant as an arrear of land revenue.

(6) *Code provisions applicable.*—Save as herein provided, the grant shall be subject to the provisions of the said Code.

(*Map.*)

Schedule I.

Length and Breadth.		Total superficial area.	Forming (part of) Survey No. or Hissa No.	Boundaries.				Remarks.
North to South.	East to West.			North.	South.	East.	West.	

*Here insert description of the building such as "a residential bungalow and outhouses."

Schedule II.

(The numbers of the conditions which are applicable should be entered in condition 3 of the grant: and special conditions should be inserted in continuation.)

1. The applicant may build on the area marked on the map annexed and shall leave the remaining area of the said plot as an open space.

2. of the said plot shall be left open to the sky.

3. Any latrine, cesspool, or stables constructed on the said plot shall, if any place shall have been set apart in the map annexed for such purpose be constructed in such place and not elsewhere.

4. No building shall be erected in the said plot more than feet in height.

5. The building erected on the said plot shall be used for residential purposes only.

6. No building erected on the said plot shall be used as a shop or a factory or as a place for carrying on an offensive trade.

7. The grant shall be subject to the following special conditions :—

(*a*)

(*b*) etc., etc.

IN WITNESS WHEREOF the Collector of has hereunto set his hand and the seal of his office on behalf of the Governor of Bombay; and the applicant has also hereunto set his hand this day the of 19 .

(Signature of applicant.)

(Signatures and designations of witnesses.)

(Signature of Collector.)

(Signatures and designations of witnesses.)

(Seal of Collector.)

We declare that *A. B.*, who has signed this notice, is, to our personal knowledge, the person he represents himself to be, and that he has affixed his signature hereto in our presense.

(Signed) *E. F.*
G. H.

N. B.—1. This document need not be registered section 90 (1) (*d*), Act XVI of 1908.

2. This document is exempt from stamp duty (Rule 7, G. of I. Notification No. 3616,—Exc. 16-7-09) See also R. 7431-23. Form was sanctioned in G. R.1291-20.

3. When an additional condition regarding the reservation of margin and surrender of a strip of land to the State Government for purposes of a road is to be imposed, the applicant should be required to execute an agreement in form " MM " along with the sanad in form " M ".

FORM MM.

Form of agreement to be executed by the applicant where an additional condition regarding the reservation of margin and surrender of a strip of land to the State Government for the purpose of a road is to be imposed in addition to the conditions in Form M.

This agreement made the day of one thousand nine hundred and forty between the Governor of Bombay (hereinafter called 'the Government') of the one part and A.B., , inhabitant of in the taluka of the district (hereinafter called 'the occupant', which expression shall, unless excluded by or repugnant to the context, include his heirs, executors, administrators and assigns) of the other part.

Whereas permission has been granted by the Collector of (hereinafter referred to as 'the Collector') to the occupant to use for building purposes the plot of land (hereinafter referred to as 'the said plot') described in the Schedule hereto and indicated by the letters on the site plan annexed hereto, forming part of Survey No. and measuring , be the same a little more or less, subject to certain conditions; and whereas a sanad in Form M appended to the Bombay Land Revenue Rules, 1921, has been granted to the occupant this the day 19 ;

And whereas the occupant has agreed to use the said plot for building purposes subject, *inter alia*, to the condition that a portion thereof shall be left as an open space.

Now this indenture witnesseth that in consideration of the permission being given to use the said plot for building purposes, the occupant hereby agrees with the Government that if the Collector shall give the occupant notice in writing that a strip of land from the said open space left in the said plot not more than feet in depth, is required by the State Government for the purposes of a road, the occupant shall, at the expiration of one month after the receipt of such notice, quietly surrender and hand over possession of such strip of land to the Collector in consideration of receiving from Government in exchange and as full compensation therefor a sum equivalent to ( ) times the assessment proportionately payable upon the strip so surrendered:

Provided that where the materials of any gate, wall, pavement or other such authorised erection or construction on such portion cannot in the opinion of the Collector be removed without appreciable loss, such further compensation on this account shall be paid to the occupant as the Collector may deem fit.

2. The occupant shall bear all costs incurred in the preparation, execution and stamping of these presents.

SCHEDULE.

(HERE DESCRIBE THE PLOT OF LAND.)

In witness whereof the Collector of hath set his hand and the seal of his office on behalf of the Government and Mr. has set his hand hereto the day and year first above written. Signed, sealed and delivered by Collector of

In the presence of

1.

2.

Signed and delivered by

1.

2.

ANNEXURE : " SITE PLAN ".

Seal.

FORM N [Rule 87 (*b*)].

Form of Sanad in cases where the Assessment on land appropriated to Non-agricultural purposes other than Building is altered under section 48.

WHEREAS the land hereinafter described by measurement and by the boundaries specified in the schedule (and delineated in the map hereto appended) and forming (part of) Survey No. in the village of in the taluka of , entered in the name of and at present held by , resident of has been hitherto assessed for purposes of agriculture at the rate of ; And whereas the said land been used for non-agricultural purpose, permission has been applied for to use the said land for a non-agricultural purpose, which permission in hereby granted, to wit for (describe purpose (but not for building) and such assessment has thereby become liable under section 48 of the Bombay Land Revenue Code, 1879, to be altered and fixed at a different rate :

Now this is to certify that under the provisions of the said Code and rules in force thereunder the assessment of the amount to be paid annually as land-revenue on the said land has been fixed for a term of years from the day of 19 , at the sum of Rs. (*figures*) [Rupees (*words*)] payable in each year of the said term in one instalment due on* in each year.

On the expiry of the said term, and at such further intervals as may be from time to time directed by the State Government in this behalf, the assessment aforesaid will be liable to revision in accordance with the said Code and the rules and orders for the time being in force thereunder. The occupant is hereby prohibited from using, without the previous permission in writing of the Collector, the said land or any part thereof for any purpose other than the one hereinbefore stated.

---

* Here insert the usual date of the Land Revenue first instalment or such other date as the Collector may fix (Rule 116).

Schedule hereinbefore referred to.

Length and Breadth.		Total super-ficial area.	Forming (part of) Survey No. or Hissa No.	Boundaries.				Remarks.
North to South.	East to West.			North.	South.	East.	West.	

In witness whereof the Collector has hereto set his hand and the seal of his office this day of 19

Seal.

Collector.

NOTE.—In such Sanads also the Collector has full power to impose conditions, which will be inserted after the schedule.

FORM N-1 [Rule 87(*b*)].

FORM OF SANAD IN CASES WHERE THE ASSESSMENT ON LAND TEMPORARILY APPROPRIATED TO NON-AGRICULTURAL PURPOSES OTHER THAN BUILDING IS ALTERED UNDER SECTION 48.

WHEREAS the land hereinafter described by measurement and by the boundaries specified in the schedule (and delineated in the map hereto appended) and forming (part of) Survey No. in the village of in the taluka of entered in the name of, and at present held by , resident of , has been hitherto assessed for purposes of agriculture, at the rate of ; And whereas the said land has been used for non-agricultural purpose, permission has been applied for to use the said land for a non-agricultural purpose, which permission is hereby granted, to wit for (describe purpose) butnot for a permanent building) and such assessment has thereby become liable under section 48 of the Bombay Land Revenue Code, 1879, to be altered and fixed at a different rate :

Now this is to certify that under the provisions of the said Code and rules in force thereunder, the assessment of the amount to be paid as land-revenue on the said land, has been fixed for a term of from the day of 19 , at the sum of Rs. (figures) [Rupees (words)] payable in one instalment on

On the expiry of the said term the occupant shall restore the land to agricultural use unless he has in the meanwhile applied for and obtained the permission of the Collector to continue the non-agricultural use of the land. If such permission is granted, the altered assessment aforesaid will be liable to revision in accordance with the said Code and the rules and orders for the time being in force thereunder.

In case of breach of any of the conditions of this sanad the Collector may, without prejudice to any other penalty to which the holder of the land may be liable under the provisions of the said Code—

(*a*) continue the said land in the occupation of such holder on payment of such fine and/or assessment as he may direct ; and

(*b*) direct the removal or alteration of any building or structure erected or used contrary to the provisions of this sanad within a time prescribed in that behalf by the Collector and, on such removal or alteration not being carried out within the prescribed period, cause the same to be carried out and recover the cost of carrying out the same from the holder as an arrear of land revenue.

Schedule hereinbefore referred to.

Length and Breadth.		Total Superficial area.	Forming (part of) Survey No. or Hissa No.	Boundaries.				Remarks.
North to South.	East to West.			North	South.	East.	West.	

In witness whereof the Collector has hereto set his hand and the seal of his office this day of . 19 .

Collector.

Seal.

NOTE.—The Collector has full power to impose any conditions he thinks fit. Such conditions will be inserted after the schedule for the erection of temporary structures.

FORM O (Rule 104 and Rule 113).

RECORD OF RIGHTS.

A double-page form with sufficiently wide columns for (or cards in V. F. VII-XII ruled to contain) the folllwing particulars :—

1. Serial Number.
2. Survey Number (if inam, the kind of inam).
3. Area.
4. Ordinary or Special Assessment and Judi.
5. Sub-division Number.
6. Area.
7. Assessment.
8. Judi or Special or Non-agricultural Assessment payable.
9. Occupant of Khalsa Land or Holder of Alienated Land.
10. Nature and origin of Title.
11. Other rights or encumbrances with names of right-holder or encumbrancer.
12. References to Mutation Diary, Form P.
13. Remarks.

FORM P (Rule 104).

MUTATION REGISTER.

A single page form with columns showing the following particulars :—

Serial No. of entry. 1	Nature of right. 2	Survey and anti-division Nos. affected. 3	Initials or remarks by testing officers. 4

FORM Q (Rules 104 and 108).

REGISTER OF DISPUTED CASES.

Serial No. 1	Number in Form O or P. 2	Survey No. & Hissa No (or part). 3	Date of receipt of objection. 4	Particulars of dispute with names. 5	Orders of mamlatdar or Collector. 6

FORM R (Rule 113).

[Now Combined with V. F. XII (Form 6) in card form.]

FORM S (Rule 118).

NOTICE TO A DEFAULTER.

To *A B* residing at

You are hereby required to take notice that the sum of Rs. a. p. due by you on the as the* instalment of land revenue on the land held by you, of which full details can be obtained from the Village Accountants (or otherwise as the case may be), in the village of in the taluka of has not been paid and that, unless it is paid within ten days from the date of this notice together with the sum of annas, being the fee chargeable for this notice, compulsory proceedings will be taken according to law for the recovery of the whole of the revenue still due by you on the said land, together with an additional penalty not exceeding one-fourth of the said arrears under section 148 of the Land Revenue Code.

Dated the day of 19 .

(Signed) Mamlatdar (or Aval Karkun).

*"First" or "Second", as the case may be.

FORM T (Rule 120).

Form of Agreement to be passed when forfeited land is restored on new tenure.

Agreement

To

The Mamlatdar of

I., *A. B.*, inhabitant of in the Taluka hereby accept the right of occupation of the land comprised in Survey Number in the village of in the the Taluka and I pray that my name may be entered in the Government records as the occupant of the said land.

The said land which has been foreited for arrears of land revenue has been regranted to me subject to the provisons of the Bombay Land Revenue Code, 1879, and of the Rules in force thereunder in perpetuity§ from the day of 19 ; and I undertake to pay the land revenue from time to time lawfully due in respect of the said land.

The said land has been regranted to me after forfeiture, subject to the condition to which I hereby assent in consideration of the regrant, namely, that I, my heirs, executors, administrators and approved assigns may not at any time lease, mortgage, sell or otherwise howsoever encumber the said land or any portion thereof without the previous sanction in writing of the Collector.

Dated the day of 19 at

Written by

(Signed) *A. B.*

We declare that *A. B.*, who has signed this agreement, is to our personal knowledge, the person he represents himself to be, and that he has affixed his signature hereto in our presence.

(Signed) C. D.
E. F.

We declare that to the best of our knowledge and from the best information we have been able, after careful inquiry, to obtain, the person who has passed this agreement is a fit person to be accepted by the State Government as responsible for the punctual payment of the land revenue from time to time due on the above land.

(Signed) *G. H.*, Patel,
I. F., Village-Accountant.

§ When not granted in perpetuity delete the word and insert " until the day of 19 ".

FORM U (Rule 129).

(*Standard Form R. M. 20*).

FORM OF PROCLAMATION AND WRITTEN NOTICE OF SALE OF ATTACHED PROPERTY.

(Under Section 165, L. R. C.).

Whereas the property of hereinunder specified has been attached on account of the Government assessment Rs. due by the said ; and whereas it is necessary to recover the said amount by sale of the said property, together with all lawful charges and expenses resulting from the said attachment and sale :

Notice is hereby given that on the day of 19 at o'clock A. M. A. B. the Mamlatdar of (or other person appointed) will, at in taluka in this district sell by auction to the highest bidder and upon such conditions as to upset price and other conditions as are set out in the subjoined Schedule of Conditions of Sale, the right, title and interest of the said in the property hereinunder specified, and every power of disposing of the same or any of them or of the profits arising therefrom which the said may now consistently with the law exercise for his own benefit.

Notice is also given that it shall be open to the Collector or his nominee to bid at the auction and purchase the said property on behalf of the State Government for a bid of rupee one.

Moveable Property.

(This table only should be omitted when the form is to be used under rules for the execution of decrees.)

1	2	3	4	5	6
Lot No.	Number and description of articles.	Where attached.	Where now placed.	When to be viewed.	Whether the sale is subject to confirmation or not.

Immoveable Property.

1	2	3	4	5	7	8	9
Lot No.	Description of Lot, including local situation, supposed or estimated rent or annual value and if leased, for how long, on what terms, and to whom.	Survey number, municipal number and other cadastral designation.	Government Revenue, including any Local Cess and any other known fiscal charge resting on the Lot.	Present occupant.	(Here enter any other particulars the Collector may see fit).		(This column should be used for particulars which the Collector may see fit to enter under the rules for the execution of Civil Court decrees.)

N. B.—No guarantee is given of the title of the said or of the validity of any of the right, charges or interests claimed by third parties.

(Signed)

Collector.

A printed *schedule* setting forth the conditions of sale according to the Code and Rules shall be appended.

FORM W (Rule 129).

FORM OF PROCLAMATION AND WRITTEN NOTICE OF SALE OR RIGHT OF OCCUPATION OF UNOCCUPIED LAND.

Notice is hereby given that the right of occupation of the under mentioned unoccupied land, situate in the village of in the taluka will be put up to public auction at on the day of 19 at or after o'clock $\frac{\text{A. M.}}{\text{P. M.}}$

The written (or printed) conditions of sale signed by *[may be seen on application during office hours, on any office day before the day of the auction, to the Mamlatdar of or, at the time of the auction, to the officer who conducts the same] and intending bidders are warned that they should ascertain the said conditions before bidding.

* [or " are subjoined to this Proclamation "].

Description of the Land.

Here give a full description of the land, *viz.*, the Survey Number or Numbers, if it has been surveyed, if not, its boundaries; the class of land, *i. e.*, whether it is dry-crop land, garden land or a building, etc., the area of the land, adding "be the same more or less"; the assessment, if any, at present payable for the land, and the term for which that assessment has been fixed.

(Signed)
Collector (or other competent officer).

Dated the day of 19 .

G. N., R. D., No. 4112, dated 11th November 1930 (B. G., Pt. I, p. 2800). **S. 214 (1).**

In exercise of the powers conferred by sub-section (1) of section 214 of the Bombay Land Revenue Code, 1879 (Bom. V of 1879), the Governor in Council is pleased to make the following rules regulating entry into any premises by any officer empowered under section 154 of the said Code for the distraint of moveable property of a defaulter :—

1. *Service of notice.*— Where an officer in exercise of his power of distraint under section 154 of the Bombay Land Revenue Code, 1879, intends to enter any building used as a human dwelling, the notice required by the proviso to section 200 shall be served by presentation to the defaulter or to any adult male member of his family present in the building, or failing either of the aforesaid methods, by being affixed to any prominent part of the building.

2. *Breaking open doors.*— An officer in exercise of the aforesaid power of distraint may break open, at any time between sunrise and sunset, the gate of any private street or any outer or inner door or window of any premises, if he has reasonable grounds for believing that such street or premises contain any property liable to distraint as aforesaid, and if after notifying his authority and purpose and duly demanding admittance, he cannot otherwise obtain admittance :

Provided that such officer shall not enter, or break open a door or window of any apartment in the actual occupation of a woman who according to custom does not appear in public, until he has given notice to such woman that she is at liberty to withdraw and has given her every reasonable facility for withdrawing.

3. *Forcing open of receptacle.*— An officer in exercise of the aforesaid power of distraint may break open any closed receptacle found on any premises entered in exercise of the said power, if he cannot otherwise, after demand duly made from the persons, if any, occupying the said premises to open the receptacle, obtain inspection of the contents of the same.

4. *Value of property distrained.*— The estimated sale proceeds of the property distrained shall be as nearly as possible equal to the amount in respect of which the defaulter has made default.

5. *Inventory.*— An officer on distraining any property from any premises shall make an inventory thereof; and shall supply a copy of the inventory to the defaulter, or to any adult male member of his family present; if neither the defaulter nor any such member is present, the officer shall affix a copy of the inventory to a prominent part of the premises from which distraint has been made.

Ss. 214, 74 & 76.

G. N., R. D., No. 9712/28, dated 6th April 1936 (B. G., Pt. IV-A, p. 439).

Amended by G. N., R. D., No. 9712/28, dated 11th May 1939.

In exercise of the powers conferred by section 214 read with sections 74 and 76 of the Bombay Land Revenue Code, 1879 (Bom. V of 1879), and of all other powers enabling him in this behalf, the Governor in Council is pleased to make the following rules for the relinquishment of alienated lands held for service :—

1. (1) Subject to the provisions of sections 74 and 76 of the Bombay Land Revenue Code, 1879 (Bom. V. of 1879), the holder or holders of any land held for service intending to relinquish the same or any part thereof, that is, to resign or surrender it in favour of Government, shall make an application to the Collector of the district in which such land or part thereof is situate. Such application shall be in writing and shall be signed by the holder or, if there are joint holders, by all such joint holders. If the land is held hereditarily for service, the application shall be accompanied by the consent in writing of all persons who may, at the date of the application, have a present hereditary interest in the land.

(2) If the holder or any of the joint holders or any person having the present hereditary interest is affected with a legal disability the application or consent, as the case may be, shall be signed by his legal representative entitled to act or enter into contracts on his behalf.

2. On the receipt of such application the Collector may, after holding an inquiry himself or causing such inquiry to be held by an officer not lower in rank than a Mamlatdar or Mahalkari, and on being satisfied that the requirements of sub-rule (1) have been duly complied with, direct that the land shall, subject to any rights, tenures, incumbrances or equities (other than those of the State Government, the applicant and any other person consenting to the relinquishment) lawfully subsisting in favour of any person, be entered in Government records as unalienated unoccupied land, and the land shall thereupon cease to be land held for service. The Collector may, subject to such orders as may be passed by the Commissioner in this behalf, grant permission to occupy the said land or any portion thereof to any person who made or consented to the relinquishment on such terms and conditions as he thinks fit.

THE BOMBAY IRRIGATION ACT, 1879 (BOM. VII OF 1879).

G. N., P. W. D., No. 10, dated 11th May 1881.

Modified by G. N., P. W. D., No. 74, dated 4th October 1887.

Under section 4 of the Bombay Irrigation Act (No. VII of 1879), the Right Honourable the Governor in Council is pleased to invest the following officers with the powers named in the sections set against each :—

(1) Assistant or Deputy Collectors—for sections 9, 26, 34, 58 and 63.

*(2) Assistant Engineers and Upper Subordinates in charge of Irrigation operations acting under the orders of the Executive Engineers—for section 27.

(3) Mamlatdars, Mahalkaris and Mukhtyarkars—for sections 9, 58 and 63.

(4) Villages Officers—for section 9.

G. N., P. W. D., No. 4962/27, dated 5th January 1932 (B. G., Pt. I, p. 55). S. 4(b)

In exercise of the powers conferred by clause (*b*) of section 4 of the Bombay Irrigation Act, 1879 (Bom. VII of 1879), and in modification of Government Notifications in the Public Works Department, No. 10, dated the 11th May 1881, and No. 2, dated the 27th March 1905, and in supersession of Government Notification in the Public Works Department, No. 4962/27, dated the 14th May 1931, the Governor in Council is pleased to invest the following officers with the powers of Canal Officers under the sections of the said Act specified against them in respect of irrigation works in the Deccan and Gujarat :—

	Sections.
(1) Assistant Executive Engineers and Assistant Engineers in charge of Irrigation works *in right of their offices* ...	6 to 10, 13, 14, 21, 27, 31, 34 and 63.
(2) Assistant Executive Engineers and Assistant Engineers in charge of Irrigation works *acting under the orders of Executive Engineers* ...	25, 26 and 58.
(3) Upper Subordinates in charge of Irrigation works *acting under the orders of Executive Engineers* ...	6, 7, 9, 25, 26, 27, 34, 58 and 63.

G. N., P. W. D., No. 73, dated 4th October 1887 (B. G., Pt. I, p. 837). S. 4

In supersession of Notifications in the Public Works Department (Irrigation), No. 20 of 13th December 1879 and No. 1 of 4th February 1880, the Governor in Council is pleased, under section 4 of the Bombay Irrigation Act (No. VII of 1879), to appoint Superintending Engineers and Executive Engineers to be Canal Officers in respect of all irrigation works within their respective Divisions† or Executive Districts‡ and to invest them with all the powers and duties of Canal Officers under the said Act.

---

* So far as the irrigation works in the Deccan and Gujarat are concerned, this part has been modified, *vide* G. N., P. W. D., No. 4962/27, dated 5th January 1932.

† Now "Circles".

‡ Now "Divisions".

S. 4 **G. N., P. W. D., No. 2, dated 27th March 1905 (B. G., Pt. I, p. 403).**

In exercise of the powers conferred by section 4 of the Bombay Irrigation Act, VII of 1879, the Governor in Council is pleased to invest Assistant Engineers and Upper Subordinates in charge of Irrigation operations, *acting under the orders of Executive Engineers* with all the powers specified in sections 6, 7, 9, 25, 26, 34, 58 and 63 of the said Act.‡

S. 4 **G. N., R. D., No. 8558/24/(a), dated 15th April 1936 (B. G., Pt. I, p. 657).**

In exercise of the powers conferred by section 4 of the Bombay Irrigation Act, 1879 (Bom. VII of 1879), the Governor in Council is pleased to appoint the Mamlatdar of Sangamner in the Ahmednagar District to be *ex-officio* Canal Officer for the purposes of Part X of the said Act, and to authorise him to exercise the powers conferred upon a Canal Officer by sections 76, 77, 78, 79 and 86 of the said Act.

S. 4 (b) **G. N., R. D., No. 5093/33, dated 16th April 1943 (B. G., Pt. IV-B, p. 180).**

In exercise of the powers conferred by clause (*b*) of section 4 of the Bombay Irrigation Act, 1879 (Bom. VII of 1879), the Government of Bombay is pleased to invest the Deputy Engineer in charge of the Haveri Irrigation Sub-Divisional Office with powers under section 86 of the said Act in respect of the Second Class Irrigation works within his jurisdiction.

Ss. 61 & 70 **G. N., P. W. D., No. M. 2995, dated 19th March 1917 (B. G., Pt. I).**

In exercise of the powers conferred by sections 61 and 70 of the Bombay Irrigation Act, 1879 (Bom. VII of 1879), the Governor in Council is pleased to make the following rule :—

(1) No person shall

(*a*) pass or cause animals or vehicles to pass, in or across the bank or the land adjoining the bank of Lake Fife ; or

(*b*) do any act which directly or indirectly fouls the said bank or land or the water of the lake.

(2) Any person doing any act in contravention of sub-rule (1) shall be liable to a fine of Rs. 50, or to imprisonment for one month or to both.

S. 70 **G. N., P. W. D., No. C. W. 6543, dated 30th March 1920 (B. G., 1920, Pt. I).**

In exercise of the powers conferred by section 70 of the Bombay Irrigation Act, 1879 (VII of 1879), the Governor in Council is pleased to make the following rules for regulating the supply of water to the Civil Station* and Municipal District of Ratnagiri, namely :—

1. *Administration.*—The Executive Engineer, Ratnagiri District, is responsible for all matters connected with the Ratnagiri Water Supply except for the assessment and recovery of water charges for water supplied to the municipality.

‡ So far as the irrigation works in the Deccan and Gujarat are concerned, this notification has been modified by G. N., P. W. D., No. 4962/27, dated 5th January 1932, printed on page 137 *Supra*.

* For revised rate for the water supplied at the civil station, Ratnagiri, see G. R., P. W. D., No. 3501, dated the 21st April 1927 printed on page 141 *infra*.

2. *Rates.*—All water supplied shall be charged for at the rate of annas 4 per 1,000 gallons according to the amount consumed as registered by a meter, except in cases provided for by the special orders of the State Government.

3. *Attachments.*—(*a*) Applications for new attachments to the water mains shall be made to the Executive Engineer, Ratnagiri District.

(*b*) Whenever such attachment is to be made in the Municipal District, the application shall be forwarded through the municipality.

(*c*) An application for a new attachment shall be made by the owner of the property to be supplied, who will be required to sign an agreement promising to pay for the water supply at the rates sanctioned by the State Government from time to time, and to observe the rules for the time being in force relating to water-supply.

(*d*) The attachment may be sanctioned by the Executive Engineer, Ratnagiri District, except where the sanction of a higher authority is required by any rule or order.

(*e*) Attachments to water mains will always be made by the Public Works Department.

(*f*) The following fees shall be paid in advance before any such attachment is made :—

	Rs.	a.	p.
⅜ inch attachment	1	0	0
½ inch attachment	1	0	0
¾ inch attachment	1	8	0.
1 inch attachment	2	0	0
1½ inch attachment	4	0	0

(*g*) The applicant shall bear the cost of the connections with the premises and shall lay down the service pipes for which work he shall employ plumbers approved by the Executive Engineer ; the final connection between the private service pipes and the main shall not be made until the work has been inspected and passed by the Executive Engineer or his authorised agent.

(*h*) The owner shall provide one cast iron plug cock of suitable size for every attachment. This cock shall be fixed on the upstream side of the meter where meters are used, and in other cases in a position selected by the Executive Engineer or his authorised agent ; the cock shall be worked only by the Public Works Department.

4. *Stoppage of connection by request.*—When a house becomes unoccupied or when a supply is not required, the owner of the house shall at once inform in writing the Public Works Department Sub-Divisional Officer when the connection will be stopped ; the connection will be re-opened when desired without any charge. In the absence of such intimation the owner shall be liable for the charge for any water registered by the meter, though the house has been unoccupied.

5. *Meters.*—(*a*) Meters and meter boxes will be provided, fixed and maintained at the expense of the State Government. No meter rent will be charged.

(*b*) The meter shall, wherever practicable, be placed inside the premises to which the water is supplied.

(*c*) The owner of the premises shall be liable for any damage to or loss of the meter, meter fittings or meter boxes and for the cost of all repairs except those due to fair wear and tear.

(*d*) The owner shall keep the meter box in a clean state, and if he fails to do so, any expense incurred in removing dirt, etc., to enable the readings to be taken will be included in his bill.

(*e*) If on examination any meter is found to be out of order and consequently not registering correctly, the consumption during the period from the last reading till the attachment of a correct meter shall be calculated at the average daily consumption of the last correctly registered period, or between the same dates in the previous year, or of any period during which in the opinion of the Executive Engineer the consumption would probably have been the same.

6. *Presentation and payment of bills.*—(*a*) Water charges shall be paid monthly on bills prepared by the Public Works Department Sub-Divisional Officer, Ratnagiri. The amount due shall be paid within 20 days from the date on which the bill is presented.

(*b*) In order to facilitate the adjustment of accounts between landlords and tenants, the Executive Engineer shall, when requested in writing, furnish a memorandum showing the consumption and probable charges on account of water-rate for any broken period of the month since the preparation of the last bill.

7. *Power to stop connection.*—The Executive Engineer shall have power to cut off the connection between the private pipe and the public main in any of the following events :—

(*a*) In default of payment of water-rates or of any bills submitted on account of repairs to meters, etc., within 20 days after the same shall have been demanded in writing.

(*b*) If any house-owner or occupier who is supplied with water shall, without the previous sanction of the Executive Engineer, permit the supply of water to persons other than those residing on the premises or shall use the water for purposes in violation of the conditions on which it is granted, provided that six days printed or written notice is previously given from the Executive Engineer's office.

Note.—" Conditions " mean conditions applied by the Executive Engineer.

(*c*) In case of leakage of pipes or other defects in the private service arrangements likely to cause loss to the State Government, provided that 48 hours' notice be given previously from the Executive Engineer's office.

(*d*) If water not charged for by meter shall be allowed to run to waste after the owner or the occupier shall have been warned by printed or written notice from the Executive Engineer's office not to allow it to do so.

(*e*) In case of broken pipes or fittings causing loss of water likely to cause damage to property, after such notice as may be possible has been given.

(*f*) In any case of refusal to allow the Executive Engineer, or his authorised agent, to enter on any land or building for the purpose of inspecting service pipes, and fittings, etc., for reading and repairing meters, or for any other work in connection with the water-supply.

(*g*) If the house-owner shall fail to imbed pipes which are exposed or lie above the ground surface or to remove pipes from situations where, in the Executive Engineer's opinion, the water-supply is liable to contamination, in each case within a period of 48 hours from the date of issue of a written notice from the Executive Engineer's office.

(*h*) If any new service pipes shall be laid or any material extension of or alteration to a private water connection pipe, etc., shall be carried out without the previous sanction of the Executive Engineer or by any other person than a plumber licensed by the Executive Engineer.

(*i*) If a pump, or any other contrivance for increasing the supply of water through a pipe shall be connected to a service pipe.

Note.—Where the supply is given through the Municipality, notices and warnings under clause (*b*), (*c*), (*d*), (*e*), (*g*) will usually be served through the Municipality.

8. *Power to open roads.*—The Executive Engineer shall have the power to open any road for the purpose of laying new mains or for any purpose in connection with the distribution of water, and shall be responsible for the efficient repair of the road, or of any drain or structure that has to be opened or removed for the purposes stated.

9. *Tanks.*—Tanks for storing water from attachments to the water mains shall not be fixed without the previous sanction of the Executive Engineer.

10. *Excess over free supply.*—Persons or institutions entitled to free water-supply shall be limited to a definite quantity to be decided by Government in each case, and any excess shall be charged for at four annas per 1,000 gallons.

11. *Liability for charges.*—(*a*) Owners of properties shall be solely responsible for the payment of all charges preferred under these rules. The Executive Engineer may receive payment from an agent or a tenant duly authorised by the owner of the property to make such payment; the owner shall in any case be held responsible in default of payment by such agent or tenant.

(*b*) If any payment due under these rules on a house or property which is sold or whose ownership is transferred, remains in arrears, the supply of water may be stopped until the arrear is paid.

12. *Charge for water wasted or unauthorisedly used.*—In the event of any water being wasted or used in an unauthorised manner, the owner shall be liable to be charged, a sum not exceeding three times the rate chargeable for the water estimated by the Executive Engineer to have been wasted, or used in an unauthorised manner.

Note.—'Unauthorised' means without the previous permission of the Executive Engineer.

13. *Penalties.*—Any person committing any of the breaches specified in clauses (*b*), (*c*), (*g*), (*h*) and (*i*) of rule 7 and in rule 9, shall, on conviction by a Magistrate, be liable to the penalty provided in section 61 of the Bombay Irrigation Act, 1879, provided that nothing herein contained shall be deemed to affect the liability of such person to prosecution under any other enactment.

(G. R., P. W. D., No. 3801, dated 21st April 1927.)

Resolution.—Government are pleased to direct that the present method of payment by meter for the water supplied at the Civil Station, Ratnagiri, should be changed to that of payment by the size of the pipes. The rates to be charged should be as under :—

		Rs.
for a half inch connection	... ...	18 per annum.
for a three-fourths inch connection	... ...	36 ,, ,,
for a one inch connection	... ...	60 ,, ,,
and for a one and half inch connection	... ...	120 ,, ,,

2. The new method of payment should be brought into force as early as possible.

3. The meters that will fall out of use owing to the introduction of the new system should be disposed of to the best advantage of Government.

4. A report on the financial results of the water-works should be submitted to Government for information after one year's working of the new system.

5. The proposal made by the Executive Engineer, Ratnagiri Division, in paragraph 3 of his letter No. Rat-26, dated 31st July 1926, to charge the Mental Hospital in future for the water supplied to that institution, is approved. The

Surgeon General with the Government of Bombay should be requested to arrange for the necessary payment according to the sizes of the pipes used at the rates mentioned in paragraph 1 of this Resolution).

S. 70. **G. N., P. W. D., No. 401/27, dated 27th July 1936 (B. G., Pt. I, pp. 1406 to 1409).**

In exercise of the powers conferred by section 70 of the Bombay Irrigation Act, 1879 (Bom. VII of 1879), and in supersession of Government Notifications in the Public Works Department Nos. A. 98, A. I. 8639, and C. W. 1695, dated 16th October 1901, 3rd September 1917, and 30th January 1922, respectively, Government are pleased to prescribe the following rules for regulating the supply of water to the Military Cantonment and the Civil Station of Poona, namely :—

1. The Executive Engineer, Poona Water Works Division, hereinafter called the "Executive Engineer", is responsible for all matters connected with the Poona water supply and to certain outside areas supplied from the Government Water Works.

2. All water supplied shall be charged for according to the amount consumed, as registered by a meter except—

(*a*) in cases covered by rule 10, or

(*b*) in cases provided for by the special orders of the State Government.

3. (1) Applications for attachments and detachments to the water mains shall be made to the Executive Engineer.

(2) Where the application is made by the owner of the property, it may, except where the sanction of a higher authority is required by any rule or order, be granted by the Executive Engineer on the applicant's signing an agreement promising to pay for the water-supply at the rates sanctioned by the State Government from time to time and to observe the rules for the time being in force relating to the supply of water.

(3) Where the application is made by a person other than the owner of the property, it may, subject to the conditions of the preceding sub-rule be sanctioned at the discretion of the Executive Engineer provided that three months water rates as estimated by him in accordance with rules 6, 7 or 10 are paid in advance as a deposit. The usual water rates in this case shall be paid by the applicant on the prescribed dates under the rules and, if not paid may be recovered from the deposit, the balance of the deposit if any shall be returneed only after the attachment is closed and all arrears of water rates are paid.

4. (1) Attachments to the water mains will always be made by the Executive Engineer, Poona Water Works Division, according to specifications which may be laid down from time to time.

(2) The following fees shall be paid in advance before any such attachment is made :—

	Rs.
3/8"	4
1/2"	5
3/4"	6
1"	8
1½"	14

Connection for 2" and above will be charged as per estimate on application.

(2-A) In case the attachment is cut off for non-payment of fees or for any other cause the following penalty shall be paid in advance before the water-supply is opened :—

	Rs.
3/8″	2
1/2″	3
3/4″	3
1″	4
1½″	5

(3) All service pipes from the connection on a Government water main to the premises of a house or bungalow must be laid by the owners of the properties according to the specifications of the Executive Engineer through the agency of the Plumbers licensed by him.

(4) All cocks and taps attached to service pipes in houses or bunglows must be of the screwdown pattern and not of the plug pattern.

5. When an application for closing a water connection is made, the applicant may at his option pay, in advance, a fee at half the rates fixed as per paragraph 4 (2-A) above for reopening the connection subsequently. This amount will cover the cost of closing and reopening the water-supply.

(*a*) In case an owner provides a stop-cock on the service pipe at a reasonable distance from a Government water main behind the meter no detachment fee shall be charged in case any repairs to the service pipe system are required to be carried out but an intimation to the Executive Engineer should invariably be given before any such repairs are carried out.

6. Water supplied and sold by meter shall be charged at the rate of annas 8 per 1,000 gallons or at such revised rates as shall be sanctioned by the State Government from time to time.

The total monthly charge under this rule shall be in addition to the rent charged for the meter and shall be subject to the following minima :—

	Rs.
3/8″	2 per month.
1/2″	3 per month.
3/4″	6 per month.
1″	9 per month.

7. Meters will be provided and fixed at the expense of the State Government and rent shall be charged as follows :—

Rent for Meter.

	Rs.	a.	p.
3/8″	0	8	0
1/2″	0	8	0
3/4″	0	12	0
1″	1	0	0
1½″	1	8	0
2″	2	0	0
2½″	2	8	0
3″	3	0	0
4″	4	0	0

8. The meter shall wherever practicable be fixed close to the premises of a house or within a bungalow compound or at the site shown by the owner, his agent or any responsible person, at whose instance water is supplied and the owner of the premises shall be liable for any damage to the meter and for the cost of all repairs except those due to fair wear and tear. The owner shall keep the meter box in a clean condition and if he fails to do so any expense incurred in cleaning it to enable the reading to be taken will be separately billed for and recovered from him.

9. If, on examination, any meter is found to be out of order and consequently not registering correctly, the consumption during the period since the last reading till a proper meter is attached shall be calculated at the average daily consumption of the last registered period, or of the same period of the previous year or any period during which in the opinion of the Executive Engineer the consumption was most likely to be similar.

10. (1) For small houses in bazars and their vicinities and in special cases for certain small houses without gardens elsewhere, water shall be charged for according to the diameter of the attachment to the water main as follows :—

	Rs.
For 3/8″ attachment or tap	1 per mensem.
For ½″ attachment or tap	2 per mensem.

(2) The above rate shall be paid for the draw off from one point only, i.e., from one stand post, one tap or any other method of draw off from the private pipe attached to the Government water main. The rate for each tap from tank, cistern or houd shall be the same as for each tap from a pipe connection.

(3) The same rates shall be paid for every additional stand post, tap or other method of draw off from the same attachment.

(4) If an owner fails to intimate that he has increased the number of his taps he will be charged for the additional taps from the date of the previous verification of taps.

11. (1) When a house is unoccupied and the owner is not in receipt of rent for the property, only one-half of the rates prescribed in rule 10 shall be charged from the date of receipt of a written initmation to that effect in the office of the Executive Engineer. The intimation should be repeated (if the house remains vacant) at the commencement of each succeeding quarter. The concession is inadmissible for properties which remain partially open.

(2) The Executive Engineer may, if he considers it advisable, order the attachment to an unoccupied house to be closed in which case no charge shall be made for water. The charge for renewing the attachment to the premises shall be made in accordance with the procedure laid down in rule 4 (2-A).

(3) If a tap is not required the owner may remove the same and fix an iron plug in its place. When this is done no charge will be made from the date on which a written intimation is received in the office of the Executive Engineer and verification to that effect is made.

12. (1) If the Executive Engineer considers it advisable, a meter may be fixed to the service pipe from any attachment charged for in accordance with rule 10 and after 24 hours' notice the charge for the water-supply may be made in accordance with rules 6 and 7 and 7 (*a*).

(2) Similarly in cases in which water is charged for in accordance with rule 6, the Executive Engineer may remove the meter when requested to do so by the house owner, provided the Executive Engineer is satisfied that the removal of the meter is not likely to reduce the charges for water consumed below the sanctioned rate.

13. (1) Rates charged under rule 10 shall be payable in advance in four equal quarterly instalments not later than 15th April, 15th July, 15th October and 15th January. Should a refund be claimed under rule 11, it will be granted for period of not less than half a month.

(2) In the case of charges under rules 6 and 7 bills are prepared in the office of the Executive Engineer in the name of the landlord generally and in the name of tenant if connection is given to him on his responsibility after receiving a deposit and posted monthly. In the case of metered connections the water-rate month covers the period from 21st of one month to the 20th of the succeeding month.

(3) In order to facilitate the adjustment of accounts between landlords and tenants, the Executive Engineer will when called upon in writing by the landlord furnish a memorandum showing the consumption and probable charge on account of water-rate and meter rent for any broken period of the month or quarter since the preparation of bill for the preceding month or quarter.

14. The Executive Engineer shall have power to cut the service pipe between a private pipe and a Government water main in any of the following events :—

(*a*) In default of payment of water rates and meter rents or of any bill submitted on account of repairs to meters within twenty days after the same has been demanded in writing.

(*b*) If any house owner or occupier who is supplied with water under rule 6 or rule 10 shall, without the previous sanction of the Executive Engineer, permit the supply of water to persons other than those residing on the premises or shall use the water for purposes in violation of the conditions for which it is supplied provided that six days' printed or written notice is previously given from the Executive Engineer's Office.

(*c*) In the case of leakage of pipes or other defects in the private service arrangements likely to cause loss to the State Government.

(*d*) If water shall be allowed to run to waste after the owner or the occupier shall have been warned in a printed or written notice from the Executive Engineer's office not to allow it to do so.

(*e*) In the case of broken pipes or fittings causing loss of water likely to cause damage to property after such notice as may be possible has been given.

(*f*) In case of refusal to allow the Executive Engineer or his authorised agents to enter on any land or building for the purpose of insepcting service pipes, fittings, etc., or to take meter readings.

(*g*) If the house owner fails to embed pipes which are exposed or lie above the ground surface in a manner approved of by the Executive Engineer or to remove pipes from situations in which in the Executive Engineer's opinion the water-supply is liable to contamination or refuses to clean pipes which are obstructing and contaminating the water-supply in each case within a period of forty-eight hours from the date of issue of a written notice from the Executive Engineer's office.

(*h*) If any new service pipes are laid or any extension or alteration or repairs to service pipes is carried out by any other person than a plumber licensed by the Executive Engineer.

(*i*) If a pump or any other contrivance for increasing the supply of water through a pipe be connected to the service pipe of a house.

15. The Executive Engineer shall have power to open any road for the purpose of laying new mains, service pipes to private houses or for any other purpose in connection with the distribution of water and shall be responsible for the efficient repairs to the roads, drains or any structure that has to be removed in order to carry out the work referred to.

16. Tanks for storing water from unmetered attachments to the water mains shall not be fixed without the sanction of the Executive Engineer, if so fixed, the owér will be liable to be charged, at the discretion of the Executive Engineer, for taking water in an unauthorised manner from the date of the previous verification of taps.

17. Persons entitled to free water-supply shall be limited to a definite quantity to be decided by the State Government in each case and excess shall be charged for at annas 8 per 1,000 gallons.

18. (1) Subject to rule 3 (3) owners of property shall be solely responsible for the payment of all charges preferred under the above rules. The Executive Engineer may however receive payment by an agent or a tenant duly authorised by the owner of the property who in any case shall be held responsible in default of payment by his agent or tenant.

(2) If any payments due under these rules on a house or property which is sold or whose ownership is transferred remain in arrears the supply of water shall be stopped until the arrears are paid.

19. In the event of any water being wasted or used in an unauthorised manner, the owner shall be liable to be charged a sum not exceeding three times the value of the water estimated by the Executive Engineer to have been wasted or used in an unauthorised manner.

20. If the owner or a tenant of the premises considers that the meter fixed to his attachment is not registering correctly and requires the same to be tested, this will be done on his paying a meter testing fee as follows :—

	Rs.
3/8″ meter 1/2″ meter 3/4″ meter 1″ meter	3
1½″ meter 2″ meter 2½″ meter	5
3″ meter 3½″ meter 4″ meter	10

If the meter on testing is found to register incorrectly the testing fee will be refunded and the water rate bill amended at the discretion of the Executive Engineer.

If the meter is found to register correctly the meter testing fee so paid will be forfeited.

21. Contractors applying for a temporary connection on their own behalf for construction purposes will be required to pay a deposit and the usual attachment fee in advance. The amount of deposit to be fixed by the Executive Engineer. The Military, Civil or Local authorities requesting attachments on behalf of contractors will be held responsible for the payment of all charges in connection with attachment and water consumption.

22. Any person committing a breach of clause (*b*), clause (*c*), clause (*h*) or clause (*i*) of rule 14 or of rule 16 shall on conviction by a Magistrate be liable to the penalty provided in section 61 of the Bombay Irrigation Act, 1879 : provided that nothing herein contained shall be deemed to affect the liability of such person to prosecution under any other enactment.

23. If any unauthorised connection be made to the Government water mains or private pipe between the Government main and the meter with the object of getting water without payment in whole or in part, the owner of the property concerned shall be liable to prosecution under section 379 of the Indian Penal Code.

G. N., P. W. D., No. 1250/36, dated 18th February 1938 (B. G., Pt. I, p. 328). **S. 70.**

In exercise of the powers conferred under section 70 of the Bombay Irrigation Act, 1879 (Bom. VII of 1879), and in supersession of Government Notification in the Revenue Department, No. 5716/24, dated 11th February 1931, the Government of Bombay is pleased to make the rules for regulating the supply of water to the Military Cantonment and Civil Station of Poona, sanctioned under Government Notification, Public Works Department, No. 401/27,* dated 27th July 1936, and published at pages 1406–1409 of Part I of the *Bombay Government Gazette*, dated 30th July 1936, applicable for regulating the supply of water to the Military Cantonment of Kirkee and the Civil Station of Kirkee including Bopodi, Chikalwadi and Pashan.

G. N., P. W. D., No. 2353/27, dated 4th January 1934 (B. G., Pt. I, p. 25). **S. 70. Bombay Canal Rules, 1934.**

Amended by G. N., P. W. D., No. 2353/27, dated 26th February 1934.
Amended by G. N., P. W. D., No. 2353/27, dated 23rd August 1934.
Amended by G. N., P. W. D., No. 2353/27, dated 19th December 1934.
Amended by G. N., P. W. D., No. 2353/27, dated 19th March 1935.
Amended by G. N., P. W. D., No. 9571/27, dated 3rd July 1936.
Amended by G. N., P. W. D., No. 263/36, dated 13th April 1938.

In exercise of the powers conferred by section 70 of the Bombay Irrigation Act, 1879 (Bom. VII of 1879), and in supersession of Government Notification in the Public Works Department, No. 1556, dated the 19th December 1922, the Governor in Council is pleased to make the following rules for the administration of canals in the State of Bombay with effect from the 15th February 1934, namely :—

*Printed on page 142 *supra*.

THE BOMBAY CANAL RULES, 1934.

PART I.

PRELIMINARY.

1. *Short title.*—These rules may be called the Bombay Canal Rules, 1934.

2. *Definitions.*—In these rules unless there be something repugnant in the subject or context—

(*a*) "The Act" means the Bombay Irrigation Act, 1879.

(*b*) "Block" means the whole area of certain specified land to which the block system is applied.

(*c*) "Block conditions" means the special conditions prescribing, regulating or restricting the irrigated cultivation which may be carried on within a block.

(*d*) "Block period" means the period for which a supply of water is sanctioned under the block system.

(*e*) "Block rate" means a fixed uniform annual rate per acre levied for the supply of water to a block.

(*f*) "Block system" means a system under which a supply of water is provided for carrying on irrigated cultivation under certain conditions throughout a block for a period of years.

(*g*) "Cold weather season" means the period in the districts of Ahmedabad, Kaira, Broach and Panch Mahals and Surat, from the 16th November, and elsewhere, from the 15th October, till the 14th February ensuing.

(*h*) "Executive Engineer" means the Executive Engineer in charge of Irrigation in any area and includes any officer duly empowered in that behalf.

(*i*) "Form" means a form prescribed by these rules.

(*j*) "Fruit block" means a block in which the irrigation of long-term fruit trees is permitted.

(*k*) "Garden block" means a block in which the irrigation, throughout the year, of crops other than sugarcane, pan or long-term fruit trees is permitted.

(*l*) "Hot weather crop" means a crop grown within the period between the end of the cold weather season and the break of the monsoon season.

(*m*) "Hot weather season" means the period from the 15th February till the 14th June ensuing.

(*n*) "Kharif crop" means a crop grown within the period from the break of the monsoon season to the beginning of the cold weather season.

(*o*) "Monsoon season" means the period from the 15th June till the 15th November ensuing in the case of the districts of Ahmedabad, Kaira, Broach and Panch Mahals and Surat, and till the 14th October ensuing elsewhere.

(*p*) " Outlet " means an opening through which water passes from a Government canal, branch cannal or distributary to a private water course.

(*q*) " Pass " means a written order issued to any person authorising him to receive a supply of water from a canal.

(*r*) " Perennial crop " means a crop which is irrigated continuously for a period of more than eight months.

(*s*) " Plot " means one of two or more portions into which a piece of land is divided for the purpose of irrigation, each of such portions being provided with a separate inlet for irrigation water.

(*t*) " Prescribed " means prescribed by these rules.

(*u*) " Rabi crop " means a crop grown within the period between the 15th September and the end of Febraury next following.

(*v*) " Seasonal crop " means a crop which is sown, cultivated and reaped during a particular season of the year.

(*w*) " Section " means a section of the Act.

(*x*) " Sub-Divisional Officer " means the Sub-Divisional Officer, in charge of irrigation in any area, subordinate to the Executive Engineer.

(*y*) " Sugarcane block " means a block in which the irrigation of sugarcane is permitted.

(*z*) " Superintending Engineer " means the Superintending Engineer in charge of Irrigation in any area.

(*aa*) " Two season block " means a block in which irrigation during the monsoon and the cold weather seasons is permitted.

(*bb*) " Two season crop " means a crop the period of growth of which extends over the whole or part of both the monsoon and the cold weather seasons.

(*cc*) " Unit " means one of two or more plots, each of a standard area, into which a piece of land is divided, such sub-division being maintained for a number of years.

(*dd*) " Unitized " means divided into units.

3. *Exemptions.*—The State Government may by notification in the *Bombay Government Gazette* exempt any canal from the operation of all or any of these rules.

PART II.

Supply of Water.

4. *Applications under section 27 : how to be made.*—(1) Every application for a supply of water for the purpose of irrigation shall be made in duplicate to the Executive Engineer.

(2) Such application may be delivered personally or sent by post to the Executive Engineer or to any officer authorised by him to receive it.

(3) Such application shall be made, in the case of—

(a) Two season blocks, in Form I ;

(b) Sugarcane blocks, in Form II or III, according as the sugarcane area permitted to be grown in the block is to be limited to 1/3rd or 1/4th of the block area ;

(c) Fruit blocks, in Form IV ;

(d) Garden blocks, in Form V ;

(e) Additional waterings, in Form VI ; and

(f) Any other form of supply, in Form VII.

(4) Printed blank copies of the prescribed forms of applications shall be supplied to intending applicants free of charge.

(5) An application for a supply of water for any purpose other than irrigation shall be made by a letter addressed to the Executive Engineer.

5. *Dates for applications.*—(1) The Executive Engineer shall, by notification published in a manner prescribed by the State Government by general or special order in this behalf, fix for each canal the date for submission of each of the prescribed applications. Any change in any of such dates shall be notified not less than three months in advance : Provided that if in any year a change is deemed to be advisable on account of unforeseen seasonal or economic conditions or changes in administrative arrangements, a later date may be fixed without such three months' previous notification.

(2) Every application for a supply of water for the purpose of irrigation shall be made in the form prescribed on or before the date fixed under sub-rule (1) for the submission of such applications :

Provided that if an application is received after such date and the Executive Engineer is satisfied that the delay was unintentional and due to causes beyond the control of the applicant, he may treat such application as if it had been received on the due date :

Provided further that if it appears to the Executive Engineer that a supply of water will be available after all applications received before such date have been disposed of, he may receive applications up to any later date.

6. *Acknowledgment of applications.*—When an application for a supply of water is personally delivered, the counterfoil receipt for applications attached to the duplicate form shall be initialled and dated by the officer receiving such application and handed back to the person from whom such application is received. In other cases, the counterfoil shall be similarly initialled and dated and shall be despatched to the applicant as soon as may be practicable after the application is received.

7. *Application, by whom to be made : conditions for sanction.*—(1) An application for a supply of water for the irrigation of any land for any period may be sanctioned in favour of—

(a) the occupant or joint occupants of the land, or

(b) the superior holder or joint superior holders of alienated land, or

(*c*) any other person or persons having a right to cultivate the land under irrigation for the period for which supply of water is to be given, or

(*d*) any other person duly authorised by any of the persons mentioned in clauses (*a*), (*b*) and (*c*) to receive such supply.

(2) An application made by a person having neither such interest in the land as is mentioned in clauses (*a*), (*b*) and (*c*) of sub-rule (1) nor such authority as is mentioned in clause (*d*) of the said sub-rule may be summarily rejected by the Executive Engineer.

(3) An application made by a person other than the occupant or superior holder shall not be sanctioned unless such applicant furnishes suitable security for the payment of water-rates or other charges which may become payable in respect of any obligation arising out of the sanction of such application, by the execution either of a bond in Form VIII with two sureties to be approved by the officer sanctioning the application or of a mortgage bond in Form IX.

(4) When an application is made by the occupant or superior holder, the Executive Engineer may, if he considers that security is necessary, require, by an order in writing, such applicant to furnish similar security as is described in sub-rule (3).

(5) When an application is made by a person other than the occupant or superior holder, the Executive Engineer may refuse to sanction such application unless the consent of the occupant or superior holder has been obtained by the applicant. If the consent of any other person having an interest in the land as mortgagee or otherwise appears to the Executive Engineer to be necessary to ensure that all obligations arising out of the sanction of such application will be carried out, he may require such consent also to be obtained by the applicant.

8. *Applications may be rejected or complied with wholly or in part—Manner of sanction : Approval.*—(1) The Executive Engineer may reject the application for a supply of water or sanction the supply applied for wholly or in part or with modifications.

(2) Subject to such orders as the State Government may from time to time issue, the Executive Engineer may refuse to sanction a supply of water for irrigation to any land under any of the forms prescribed in sub-rule (3) of rule 4 if such irrigation would, in his opinion, lead to excessive or wasteful use of water, or cause, or contribute to cause, damage or injury to such land or any other land, or cause loss or injury to the cultivator of any other land, or be likely to produce conditions dangerous to public health.

(3) The Executive Engineer may refuse to sanction a supply of water for the cultivation of sugarcane to any land within a distance of 16½ feet from the boundary of any road, cart-track, open drain or well, if such supply would, in his opinion, interfere with the use of, or cause damage to such road, cart-track, drain or well.

(4) The order passed under sub-rule (1), (2) or (3) shall be recorded on the application ; the duplicate form of the application shall be endorsed with a copy of the order and delivered or despatched, as the case may be, to the applicant. If any supply is sanctioned, the counterfoil attached to the original application shall be sent to the Talati or Patil of the village in which the land is situate.

(5) If the supply sanctioned is different from that applied for, the applicant may either withdraw his application, in which case the sanction given shalll be cancelled, or make a further application for a modification of the sanction. Such further application if sanctioned, shall not be deemed to be an application made after the prescribed date

(6) If an applicant is in arrears of water rates which became due before the date of the application, the application may be summarily rejected or sanction may be given provisionally subject to the condition that such arrears are paid before a specified date prior to the commenceent of supply.

(7) Sanction may be given provisionally subject to the conditions that all amounts which have become due on account of water rates before the commencement of supply shall be paid before such commencement of supply and that if such amounts are not paid the sanction shall be liable to cancellation.

(8) If the Executive Engineer has reason to doubt the authenticity of any signature or endorsement, or the truth or accuracy of any of the information furnished in an application, he may postpone the passing of orders until he has made such inquiries as he deems necessary in order to ascertain the facts. In such case he shall record in writing his reason for postponing the passing of orders.

9. *Areas for which permission may be granted.*—(*a*) Separate sanction shall not be given for the supply of water to any land the total area of which is less than 20 gunthas.

(*b*) Water for irrigation shall not be supplied to any detached piece of land the area of which is less than 20 gunthas.

(*c*) Water for irrigation shall not be supplied to any separate piece of land unless the area applied for is an exact multiple of 20 gunthas.

(*d*) In the case of areas irrigated—

(*i*) under the block system on any canal, and

(*ii*) for crops other than kharif on—

(A) the Nira Left Bank Canal and Shetphal Tank,

(B) the Nira Right Bank Canal,

(C) the Godavari Canals,

(D) the Pravara Canals,

(E) the Mutha Canals, and

(F) the Girna Canal,

water for irrigation shall not be supplied to any land unless it has been unitized into plots each of an area of 20 gunthas: Provided that when an application has been made for a supply of water in respect of the applicant's whole holding on a channel and after unitization a fragment of land is left over, which is too small to form a unit, water may be supplied to such fragment for crops other than sugarcane.

(*e*) Water shall not be supplied to any piece of land for irrigating more than two sugarcane crops during any period of five irrigation years.

10. *Allotment of available supply.*—If from any cause, any water supply is insufficient to meet all demands for water from such supply, questions regarding the allotment of the available supply and the quantity and egulation thereof shall, subject to the general o special orders of the State Government, be determined by the Executive Engineer.

PART III.

Demarcation and Preparation for Irrigation.

11. *Construction and maintenance of bunds and demarcation and preparation of land.*—(1) In each separate area of land for the irrigation of which sanction has been obtained,—

(*i*) the portion under irrigation shall, throughout the period of irrigation, be completely surrounded by bunds not less than 1 foot high and of 1 foot top width and shall be formed into suitable plots ; and

(*ii*) each plot shall be completely surrounded by bunds, in accordance with the following provisions, namely :—

(*a*) Round each separate and continuous area on which sugarcane is under cultivation bunds not less than $1\frac{1}{2}$ feet high by $1\frac{1}{2}$ feet top width shall be constructed : Provided that if, on account of the slope of the land and the total area included within the outer bund, the Executive Engineer directs that the bund at the lower end of the area and on each side for a distance up to 66 feet from the lower bund shall be of two feet top width such direction shall be complied with :

Provided further that for similar reasons the Executive Engineer may allow the bund at the upper end of a sloping field to be of smaller dimensions.

(*b*) Round each plot in an area on which sugarcane is under cultivation bunds not less than 9 inches high by 1 foot top width shall be constructed :

Provided that when the Executive Engineer is satisfied that on account of the configuration of the land and the manner in which it has been repaired and levelled, bunds of these dimensions are unnecessary, he may permit the construction of bunds of such smaller dimensions as he may consider adequate.

(*c*) Round each plot in which any other crop, except long term fruit trees (when each tree is separately irrigated) or kharif crop, is under cultivation bunds not less than 6 inches high by 9 inches top width shall be constructed.

(*d*) All bunds shall have slopes on both sides of 1′ to 1′.

(*e*) On any common boundary between two areas irrigated under separate sanctions, two separate bunds need not be maintained.

(*f*) When any special conditions are prescribed in any sanction given for the irrigation of any land, such land shall be demarcated and prepared in accordance with such prescribed conditions, and the provisions of this sub-rule shall not apply thereto.

(2) The Executive Engineer may withhold the first supply of water to any area in which the provisions of sub-rule (1) are not complied with.

(3) The application of water to land which is not prepared and maintained in accordance with sub-rule (1) shall constitute misuse of water within the meaning of clause (*d*) of sect on 28.

PART IV.

CULTIVATION AND USE OF WATER.

12. *Cultivation and use of water.*—The following provisions in respect of cultivation and use of water shall be observed :—

(1) A suitable system of water channels shall be so maintained that the water required for the irrigation of any plot can be supplied directly from a channel.

(2) The number and location of the inlets necessary for the supply of water to any such system shall be subject to the general or special orders of the Executive Engineer.

(3) No irrigation water shall be allowed to pass from one plot to another plot.

(4) The order in which water is supplied shall be subject to the general or special orders of the Executive Engineer.

(5) No crop shall be grown in the channels leading to the plots when such channels are less than 4 feet wide from the top inner edge of the bund and after earthing up there shall be no cane growing in or interfering with the flow of water in the channels.

(6) No crop shall be planted within 6 feet of the edge of a main water-course. If a question arises as to what is a main water-course, the Executive Engineer shall decide the matter and his decision shall be final and conclusive.

(7) No crop shall be grown on the top of any bund. A subsidiary crop may, however, be grown along the slopes of the bund provided the growth of such subsidiary crop does not interfere with inspection.

(8) (*a*) Any bund may, immediately after rain, be cut without permission. Such bund shall, however, be properly repaired before the next watering is taken.

(*b*) Except as provided in clause (*a*) a bund may be cut only in case of emergency ; and if the person on whose application the supply of water is sanctioned under these rules cuts the bund, he shall be liable for any wastage of water unless he shows to the satisfaction of the Executive Engineer that the accumulation of water, if any, was due to causes for which he was not responsible.

(9) The person on whose application the supply of water is sanctioned under these rules or his servant shall be present during the whole time that water is being taken and if a pass has been issued, such person shall have it in his possession.

PART V.

WATER RATES.

13. *Water rates when payable.*—The dates in each year for payment of water rates shall, subject to orders passed by the State Government under section 57, ordinarily be :—

For rabi crops	April 15th.
For all other crops	February 14th.

14. *Water rates how to be fixed.*—The rates, determined by the State Government under section 44, for canal water supplied for purposes of irrigation shall, in the absence of a special agreement or contract, ordinarily be levied in the form of—

(*a*) a rate per acre of land irrigated, fixed with reference to the crops grown, the season of the year during which, and the period for which, water is supplied and the method of application of water to the land, or

(*b*) a rate per unit of quantity of water supplied.

15. *Areas on which water rates are leviable.*—(1) Water rates shall be levied on an unit of 20 gunthas or on a multiple thereof :

Provided that when water is supplied to an area which is less than or is not a multiple of 20 gunthas, the rates for the supply of water to the area less than 20 gunthas or to the residue of any area over a multiple of 20 gunthas shall, up to 10 gunthas, be levied as for a supply to an unit of 10 gunthas and, exceeding 10 gunthas, as for a supply to an unit of 20 gunthas.

(2) Water rates shall be payable on the whole area in respect of which sanction to supply has been given whether water is actually taken or not provided always that water for such supply was available.

16. *Water rate leviable when mixed crops are grown.*—If mixed crops are grown in any part of a plot for any period, the water rate fixed for the highest rated crop so grown shall be charged for the whole plot for the whole period with respect to which such rate is leviable.

17. *Water rate leviable when crop sanctioned is not planted or fails and another crop is grown.*—When the sanctioned crop is not grown, or if grown fails, another crop may be sown in the same area ; and, provided water is available, water shall be given to such second crop to the date up to which water would have been given to the crop sanctioned. No additional charge shall be levied if intimation shall have been given to the Executive Engineer in writing within eight days of planting the fresh crop and if the second crop is assessable at the same or a lower rate than the sanctioned crop. If no such notice shall have been given, the irrigation of the second crop may be treated as unauthorised.

18. *Water rate leviable when land intended to be irrigated by canal water is irrigated partly by well water.*—If a portion of any land for the irrigation of which a supply of canal water has been sanctioned is irrigated by well water for a part of the season owing to a deficiency in the supply of canal water, and the applicant notifies the fact

in writing to the Executive Engineer within eight days from the date on which he began taking well water, enquiry shall be made by the Executive Engineer as to whether the use of well water was necessary and if it be shown to the satisfaction of the Executive Engineer that the use of well water was necessary the rate chargeable on the portion irrigated by well water may, at the discretion of the Executive Engineer, be reduced to an amount which shall not be less than half the rate otherwise payable.

19. *Water rate leviable when well water and canal water are conveyed in the same channel.*—If well water is conveyed to any land in any channel used for conveying canal water, water rate shall be chargeable on the whole of the land irrigated from such channel: Provided that if well water be taken for a part of the season owing to a deficiency in the supply of canal water and the applicant notifies the fact in writing to the Executive Engineer within eight days from the date on which he began taking well water, and if it be shown to the satisfaction of the Executive Engineer that such deficiency existed, the rate on the portion irrigated by well water may at the discretion of the Executive Engineer, be reduced to an amount which shall not be less than half the rate otherwise payable.

20. *Irrigation from escape channels, percolations and leakages.*—Irrigation from escape channels and from percolation and leakage falling under section 48 shall be subject to the same provisions as irrigation from other parts of a canal.

21. *Water rate leviable for supply of water for forming threshing floors.*—The Executive Engineer may give water for the purpose of forming threshing floors free to any person to whom a supply of water for irrigation has been sanctioned under these rules and to any other person at a charge per floor not exceeding half the lowest acre rate.

22. *Water rates for non-irrigational purposes.*—Water supplied from a canal for any purpose other than irrigation shall be charged for at such rate per unit of volume of water supplied as the State Government shall from time to time by order direct. Where the amount of water supplied cannot be measured the supply shall be charged for in such manner as the State Government may by order direct in each case.

Occasional Rates.

23. *Water rate leviable for supply of water obtained without permission or misused.*—If a supply of water is obtained by any person from a canal, whether for irrigation or for any other purpose, without the previous permission of the Executive Engineer or is used in any other unauthorised manner for irrigation or otherwise, the Executive Engineer may, on each occasion, charge a rate not exceeding treble the rate chargeable for the supply as if such supply had been sanctioned. Such rate shall be leviable in addition to any penalty which may be imposed under the Act.

24. *Water rate leviable on late applications.*—When an application for supply of water presented after the prescribed date is sanctioned, the water rate charged for the supply for the first irigation period shall, when such supply is for the growth of sugarcane, be 25 per cent. more than the ordinary rate and, when such supply is for the growth of any other crop, be 50 per cent. more than the ordinary rate :

Provided that the Executive Engineer may, if he is satisfied that an application could not be submitted on or before the prescribed date and after recording his reasons in writing, order any lower rate not less than the ordinary rate to be charged in the case of any such applicant or any class of such applicants.

25. *Water rate leviable for water used for the irrigation of an area in excess of the sanctioned area.*—When sanction has been given to irrigate a specified area and the applicant irrigates an area in excess of such specified area, the Executive Engineer may charge in respect of such excess area a rate not exceeding treble the rate chargeable for the supply as if the supply had been sanctioned for such excess area and may stop the supply of water under clause (*d*) of section 28 :

Provided that if the Executive Engineer is satisfied that the excess area was irrigated through a *bona-fide* mistake, no charge shall be made in respect of the following excesses :—

Excess of 1 guntha when water-supply has been sanctioned for an area of 1½ acres or less.

Excess of 2 gunthas when water-supply has been sanctioned for an area of 1½ to 4½ acres.

Excess of 3 gunthas when water-supply has been sanctioned for an area of 4½ to 9 acres.

Excess of 4 gunthas when water-supply has been sanctioned for an area of 9 to 15 acres.

Excess of 5 gunthas when water-supply has been sanctioned for an area of more than 15 acres.

26. *Charges to be imposed when water supplied through a water-course is suffered to run to waste.*—When water supplied through a water-course is suffered to run to waste, the Executive Engineer may, under section 46, charge :—

(*a*) if the water has flowed on any land, a rate not exceeding double the single watering rate for each acre on which water has flowed, and

(*b*) in any other case a rate not exceeding double the rate chargeable under rule 22, on the volume of water estimated by the Executive Engineer to have been wasted.

Exemptions, Cancellations and Remissions.

Exemption of blocks from water rates and cancellation of blocks.

27. *Exemptions from water rates in respect of blocks.*—(1) In the case of lands under the block system if in any particular year an applicant is unable to irrigate the whole or any part of the block for which water has been sanctioned, he may be granted exemption from the water rates payable in respect of the whole or part of the block remaining unirrigated as the case may be, on his applying for such exemption in Form X before the dates specified below :—

(*i*) For the first year of the block period.	Within one month from the date of sanction.
(*ii*) For subsequent years of the block period—	
(*a*) In respect of sugarcane, fruit and garden blocks.	Before 15th November preceding the year beginning from February 15th for which exemption is required.

(*b*) In respect of two season blocks. Before 15th September preceding the cold weather season for which exemption is required.

Provided that in the case of sugarcane blocks the proportion of sugarcane to other crops is not thereby increasd.

Cancellation of blocks.—(*2*) A block may be cancelled at the request of the person on whose application the supply is sanctioned—

(*a*) from the beginning of the first year of the block period if the applicant applies for cancellation within one month from the date of sanction ;

(*b*) during the remaining block period if the applicant gives notice of cancellation in writing before the 5th November preceding the year beginning from February 15th from which the block is not required in respect of sugarcane, fruit and garden blocks and before 15th September in respect of two season blocks :

Provided that the Executive Engineer may, at any time after giving twelve months, notice cancel any block or any part of a block if in his opinion further continuance of supply of water to it is objectionable.

Subsequent permission after exemption under sub-rule (1).——(*3*) When exemption from water rate is granted in accordance with sub-rule (1), subsequent permission to irrigate the whole or part of the block area so exempted shall, if water is available be given at $1\frac{1}{4}$ times the block rate in the case of sugarcane blocks, at $1\frac{1}{4}$ times the rate prescribed for the cold weather season in the case of two season blocks and at $1\frac{1}{4}$ times the rates prescribed for the cold weather and hot weather season, in respect of fruit and garden blocks :

Provided that in the case of sugarcane blocks if an applicant subsequently desires and applies in Form VI before the date fixed under sub-rule (1) of rule 5 to irrigate seasonal or two season crops in the exempted area, permission may be granted at the sanctioned rates.

No further supply to a cancelled block.—(*4*) When a sugarcane block is cancelled at the request of the person on whose application the supply was sanctioned a further supply of water for the irrigation of sugarcane within the area of the cancelled block shall not be sanctioned within a period of one year from the date of such cancellation.

Exemption from water rates in respect of lands not under block system.—(*5*) In respect of lands not under the block system no exemption from water rates shall be granted after an application for water in Form VII has been sanctioned for any crop other than perennial crops. Perennial crops may, however, be exempted from payment of water rates provided the applicant gives within one month from the date of sanction a written intimation to the Executive Engineer that water is not required.

28. *Remission of water rates.*—Remission of the whole or a part of the water rate payable by any person in respect of the supply of water for the purpose of irrigation to any land may be granted where such person has suffered loss—

(*a*) from any stoppage, diminution or increase of his water supply due to any of the causes named in clause (*d*) of the proviso to section 31 or to any act or omission of a canal officer not provided for in the said clause ; or

(*b*) from failure of his crops due to any local or general calamity :

Provided the outturn of the crops is not more than one quarter of normal.

29. *Claims for remission under rule 28.*—(*1*) Every claim for remission of water rate under rule 28 shall be preferred in writing direct to the Executive Engineer within one month from the time when the damage of failure, in respect of which the remission is claimed, is alleged to have occurred. Any claim preferred after the said period of one month may be summarily rejected.

(*2*) If, without giving the Executive Engineer at least 8 days' notice in writing of his intention so to do, the claimant cuts the crops alleged to have been damaged or to have failed at any time within 20 days after preferring his claim for remission, his claim may be summarily rejected.

30. *Readings maintained of water gauges and meters by the Irrigation Department to be accepted as authoritative.*—In cases of dispute regarding water supply or remission or exemption from water rate, the water gauges and meters maintained by the Irrigation Department shall, if certified by the Executive Engineer to have been in good order during the period to which the dispute relates, be held to furnish authoritative data for all calculations of discharge.

PART VI.

Emergency Rules.

31. *List of labourers : when to be prepared.*—Whenever it appears to a Canal Officer duly empowered to act under section 58, that circumstances may probably arise which will render it necessary for the provisions of that section to be put into operation, for the execution of any repair, clearance or other work which is being or is about to be carried on by the Irrigation Department, he shall communicate with the Collector. The Collector shall thereupon cause a list to be prepared of able-bodied persons liable to be required to assist under section 58. Such list may from time to time be revised and amended.

32. *Area for which list of labourers should be prepared.*—Every list of labourers prepared under rule 31 shall, subject to the next following rule, include the names of persons holding land or resident within such distance from the locality of the repair, clearance or work as the Collector, having regard to the number of persons likely to be required to assist at such repair, clearance or work, shall think proper.

33. *Classes of persons to be included in or exempted from list of labourers.*—Every list of labourers prepared under rule 31 shall contain the name of every able-bodied landholder holding land within the area fixed by the Collector under the last preceding rule and of every able-bodied man or woman who resides within such area and earns his or her livelihood by manual labour :

Provided that—

(*a*) the names of Indian soldiers, reservists and military pensioners and of persons who appear to the Collector to be under sixteen years or over fifty years of age shall not be included in such list, and

(*b*) any landholder who is unaccustomed to manual labour shall be permitted when called to assist at any repair, clearance or work, to furnish as a substitute any able-bodied person whose name is not on the list.

34. *Publication of list of labourers.*—The Collector shall cause the names of the persons holding land or resident in any village within the area fixed under rule 32 and included in a list of labourers to be posted in the chavdi or in some other public building in such village, and to be proclaimed in the village by beat of drum.

35. *Hearing of objections.*—Any person whose name is entered in a list of labourers may apply in writing to the Collector to have his name removed therefrom. The Collector, after such inquiry (if any) as he thinks necessary, shall record his decision in writing rejecting or granting the application.

PART VII.

APPEALS.

36. *Appeals.*—(1) An appeal in accordance with the provisions of sub-rule (2) shall lie against an order—

(*a*) passed under rule 8, or

(*b*) requiring an applicant who is an occupant or superior holder to give security under rule 7, or

(*c*) rejecting a surety tendered under rule 7 as unapproved.

(2) If the original order was passed by—

(*a*) a Sub-Divisional Officer, the appeal shall lie to the Executive Engineer, or

(*b*) the Executive Engineer, the appeal shall lie to the Superintending Engineer.

(3) Every order passed by an Executive Engineer under rule 18 or 19 shall be appealable to the Collector, provided that the appeal is presented within 30 days of the date on which the order appealed against was communicated to the appellant.

37. *Manner of preferring appeals.*—All appeals preferred under the Act or under these rules must be made by a written petition signed by the appellant. Such petition may be delivered at the office of the appellate authority by the appellant in person during office hours or forwarded through post.

PART VIII.

MISCELLANEOUS.

38. *Water rates chargeable under section 48.*—Without the special sanction of the State Government water rates under section 48 shall not be charged on land watered by a well or wells sunk at a distance of more than 100 feet from any canal situated in the Northern, Central and Southern Circles, or on land watered by a well or wells sunk before 3rd July 1936 at a distance of more than 100 feet from any canal situated in the Deccan Irrigation Circle.

Provided that such well or wells is or are fed by natural percolation only and not by a surface channel or a constructed underground channel or pipe.

39. *Closing of canal.*—No canal shall be closed for the execution of any repairs, alterations or additions thereto, except in case of emergency, without the previous sanction of the Superintending Engineer, or of the Executive Engineer duly

empowered in this behalf by the Superintending Engineer. The Superintending Engineer or the Executive Engineer duly empowered shall fix the period or periods, for which the supply of water may be stopped on account of the execution of such repairs, etc. Every intended closure of a canal shall as far as may be practicable, be notified at least 8 days in advance. In case of emergency the Canal Officer of the highest rank on the spot may close a canal and fix the said period or periods and shall report the matter to the Superintending Engineer.

40. *Passing of persons, animals or vehicles in or across canals.*—(1) No person shall pass, or cause any animal or vehicle to pass, in or across the bank or channel of any canal at any place except where indicated by a notice erected under the order of the Executive Engineer in a conspicuous place.

(2) In fixing places at which the passing in or across the bank or channel of a canal is permitted under sub-rule (1), the Executive Engineer shall have careful regard to the reasonable convenience of the people residing or holding land in the vicinity who are required to cross the canal or water their animals.

41. *Maintenance of water courses.*—For the purpose of sub-section (*b*) of section 21 " maintenance " of a water-course shall include the construction of—

(*a*) such masonry or other work as in the opinion of the Executive Engineer is necessary to prevent waste of water or damage to the channel, or

(*b*) a pipe outlet in masonry or any other type of outlet arrangement app roved by the Superintending Engineer for connecting the water-course to the field channel.

42. *Maintenance of Record of Rights and Register of Mutations.*—Copies of the Record of Rights and Register of Mutations shall be maintained at each Sectional Office or other convenient centre.

FORM I.

(Original.)

Form of Application for water for irrigation in Two-Season Blocks.

No. of application.

To—The Executive Engineer, Division.

I, , resident of , Taluka , District , make this application for the supply of water from the canal in the monsoon and cold weather seasons of years in succession from 15th June 19 to 14th February 19 subject to the provisions of the Bombay Irrigation Act, 1879, and any other Law for the time being in force relating to irrigation and subject to the provisions of the Bombay Canal Rules, 1934, and to all the conditions specified on the reverse of this application to which I agree, for the purpose of irrigating the land hereinafter described, namely :—

Name of village. गांवाचें नांव.	Distributing पाणी वाटणाऱ्या		Survey No. सर्व्हे-नंबर.	Pot No. पोट-नंबर.	Total area of Survey No. or Pot No. सर्व्हे-नंबराचें अगर पोट-नंबराचें एकूण क्षेत्र.	Total area of the holding in Survey No. or Pot No. सर्व्हे-नंबरांतील अगर पोट-नंबरांतील मालकीचे एकूण क्षेत्र.	Area applied for. मागणीचें क्षेत्र.
	Channel No. पाटाचा नंबर.	Outlet No. दरवाज्याचा नंबर.					
1.	2	3	4	5	6	7	8.
					A. g.	A. g.	A. g.

2. I am the of the land for which water has been applied for above.

3. The name and address of person to whom and the manner in which the order on this application should be delivered are :—

Date 19 .
Signature of the witness.

Signature or left hand thumb-impression of the applicant.

Signature or left hand thumb impression of the occupant or joint occupants or superior holder or joint superior holders in cases in which the applicant is not the owner.

Forwarded for sanction as follows :—

(1) Total block area to be sanctioned—Acres Gunthas (2) Period of sanction—

From To (3) Water rates to be charged per acre—Rs.

Date 19 . Sub-Divisional Officer, Sub-Division.

Sanctioned.

Date 19 . Executive Engineer, Division.

(*Note.*—Details of Security bond to be invariably furnished by non—owner applicants whose applications are not made or countersigned by owners.)

Names of sureties (1) (2) } As per Form No. VIII.

S. No. of given as security as per Form IX.

.....

दोनहंगामी ब्लॉक मंजूर केल्याबद्दल समज.

गांवच्या तलाव्याकडे रवाना होण्याकरितां.

कालवा

अर्ज-नंबर

गांवाचें नांव

सर्व्हे-नंबर

पोट-नंबर

अर्जदाराचें नांव

मंजूर केलेलें क्षेत्र एकर. गुंठे.

मंजुरीची मुदत

१७-६-१९ पासून

१४-६-१९ पर्यंत.

शेरा

कॅनाल ऑफिसरची सही.

तारीख माहे सन १९

INSTRUCTIONS.

1. This form is to be used for application for the supply of water on the block system for the irrigation of crops (including perennial crops other than sugarcane, long-term fruit trees and pan) during the monsoon and cold weather seasons only.

2. The application is to be submitted in duplicate to the Executive Engineer or to any officer authorised by him to receive such application. It may be sent by hand, presented personally or sent by post.

3. When order is passed, the duplicate form will be returned to the applicant endorsed with the Executive Enginneer's final order.

4. The applicant should note in the space provided at No. 3 on the form the name and address of the person to whom the order on this application is to be given and whether the order should be sent by post or delivered from any canal office, or kept at any office to be called for postal intimation being sent when it is ready for delivery.

5. No sanction will ordinarily be given for the irrigation of any land to any person other than (1) the sole occupant or all joint occupants, (2) the sole superior holder or all joint superior holders, (3) a person having the right to carry on irrigated cultivation of the land for the period of the sanction, or (4) a person duly authorised on behalf of any of these to receive such sanction.

6. The applicant must state at No. 2 on the form the nature of his interest in the land or of his authority to apply for sanction for carrying on irrigated cultivation in the land.

7. Any applicant may be required to furnish a Bond in Form VIII executed by two suitable sureties or execute a mortgage bond in Form IX as security for the payment of all amounts which may become due in respect of the water to be supplied under the sanction. He may also be required to obtain the assent of any person having an interest in the land to the grant of sanction to him.

8. Sanction will be refused for the irrigation of any land which is found to be unsuitable for this form of irrigation.

9. The Executive Engineer will ordinarily sanction areas which are multiples of half an acre. A block may consist of several half acre plots. The different plots forming a block need not be contiguous but must be on the same outlet.

CONDITIONS.

1. Water will be reserved in the cold weather season for the sanctioned area for rabi crops. The person on whose application the supply is sanctioned may, however, substitute for each 1½ acres of rabi crops 1 acre of two season crops.

2. Irrigation in the monsoon season is optional; but kharif crops up to the sanctioned area may be grown and for each 1½ acres of kharif crops 1 acre of two season crops may be substituted.

3. At the risk of the applicant and provided well water is available, an equal area of ordinary perennial crops (excluding sugar-cane, pan and fruit trees) may be irrigated instead of two season crops.

4. The area sanctioned shall not be exceeded, but if the irrigator wishes to irrigate in any year an area in excess of the sanctioned area he may submit an application in Form VII for the same; such applications will be given preference over those received from other applicants who are not block-holders.

5. (1) If the person on whose application the supply is sanctioned desires to shift the whole or a part of his block from the sanctioned plots to other plots, this may be allowed provided his land is unitised and he applies for the change before such date as shall be notified by the Executive Engineer.

(2) Water rates shall be charged for the cold weather season for the whole period of the sanction so long as water is available, whether a plot is irrigated in the cold weather season or not; but if in any particular year an applicant is unable to irrigate the whole or part of the block for which water has been sanctioned he may be granted exemption from the water rates payable in respect of such whole or part of the block, as the case may be, provided that he applies in Form X for such exemption before the 15th September preceding the cold weather season for which exemption is required. When such exemption granted, subsequent permission to irrigate the area exempted will only be given at $1\frac{1}{4}$ rates prescribed for the cold weather season and if water is available.

(3) The block may be cancelled at the request of the block holder :—

(*a*) from the beginning of the first year, if he applies for cancellation within one month from the date of sanction; or

(*b*) during the remaining period of sanction if he gives notice of cancellation in writing before the 15th September preceding the cold weather season from which the block is not required;

Provided that the Executive Engineer may, at any time after giving 12 months' notice, cancel any block or any part of a block if in his opinion further continuance of supply of water to it is objectionable.

6. The block sanction is liable to be cancelled or the supply to any crop irrigated under the sanction is liable to be withheld or stopped entirely without any previous notice for definite breach of any rule of the Bombay Canal Rules, 1934, or any of the conditions of this form of application.

(Additional condition 7 for Ashti, Pathri, Koregaon and Ekruk Tanks.)

7. Where no permanent water channel exists, the irrigator shall allow the construction of a temporary channel through his land, if necessary, along a line fixed by the Executive Engineer or his representative, for the benefit of irrigators whose fields are situate below his land.

Note.—Condition 1 above does not apply to Ekruk Tank.

(Additional conditions for Ekruk Tank.)

8. Water will be reserved in the cold weather season for the sanctioned area for rabi crops subject to the condition that if water is taken for kharif or two season crops no water shall be guaranteed for rabi crops. The block holder may substitute for each $1\frac{1}{2}$ acres of kharif or rabi crops 1 acre of two season crops.

9. Water is liable to be withheld at any time but full water rates shall be payable for the sanctioned area entered at No. (1) on the form for the cold weather season whether the area is irrigated or not, provided water was avilable during the period.

.....

दोनहंगामी ब्लॉकचा अर्ज दिल्याची पावती.

काल्वा

गांवाचें नांव.

सर्व्हे-नंबर

पोट-नंबर

अर्जदाराचें नांव

मागणीप्रमाणें क्षेत्र एकर. गुंठे.

अर्जाची तारीख

अर्ज पोंहचल्याची तारीख व शेरा.

अर्ज घेणाऱ्या अमलदाराची सही.

FORM II.

(Original.)

Form of application for water for Irrigation in One-Third Sugarcane Blocks.

No. of application.

To—The Executive Engineer, Division.

I, , resident of , Taluka , District , make this application for the supply of water from the canal for years in succession from 15th February 19 to 14th February 19 subject to the provisions of the Bombay Irrigation Act, 1879, and of any other Law for the time being in force relating to Irrigation and subject to the provisions of the Bombay Canal Rules, 1934, and the conditions specified on the reverse of this application to which I agree, for the purpose of irrigating the land hereinafter described, namely :—

Name of village गांवाचें नांव.	Distributing पाणी वाटणाऱ्य		Survey No. सर्व्हे-नंबर.	Pot No. पोट-नंबर.	Total area of Survey No. or Pot No. सर्व्हे-नंबराचें अगर पोट-नंबराचें एकूण क्षेत्र.	Total area of the holding in Survey No. or Pot No. सर्व्हे-नंबरांतील अगर पोट-नंबरांतील मालकीचें एकूण क्षेत्र.	Total Area applied for. मागणीचें क्षेत्र.
	Channel No. पाटाचा नंबर.	Outlet No. दरवाज्याचा नंबर.					
1	2	3	4	5	6	7	8
					A. g.	A. g.	A. g.

2. I am the of the land for which water has been applied for above.

3. The name and address of person to whom and the manner in which the order on this application should be delivered are :—

Date 19

Signature or left hand thumb impression of the applicant.

Signature of the witness.

Signature or left hand thumb-impression of the occupant or joint occupants or superior holder or joint superior holders, in cases in which the applicant is not the owner.

Forwarded for sanction as follows :—

(1) Block No. (2) Block Plots Nos.

(3) Area to be allotted—Acres Gunthas (4) Period—From To

(5) Water rate per acre to be charged—Rs.

Date 19 . Sub-Divisional Officer, Sub-Division.

Sanctioned.

Date 19 . Executive Engineer, Division.

(*Note.*—Details of Security bond to be furnished by non-owner applicants as per Instruction 7.)

Names of sureties (1) } in Form VIII.
(2) } given as security as per Form IX.

S. No. of .

.....

एकतृतीयांश उसांच्या ब्लॉकच्या मंजुरीची समज.

गांवाच्या तलाठ्याकडे रवाना देण्याकरितां.

काल्वा
गांवाचें नांव
अर्जाचा नंबर
सर्व्हे-नंबर
पोट-नंबर
अर्जीदाराचें नांव
ब्लॉकांत मंजूर केलेलें क्षेत्र. एकर. गुंठे.
मंजुरीची मुदत.
१५-२-१९ पासून
१४-२-१९ पर्यंत.
अर्जमंजुरीची तारीख
शेरा

कॅनाल ऑफिसर.

तारीख

INSTRUCTIONS.

1. This form is to be used for applications for the supply of water on the block system for the irrigation of sugarcane in those cases where the area of sugarcane permitted to be grown in the block is limited to one-third of the block area.

2. The application is to be submitted in duplicate to the Executive Engineer or to any officer authorised by him to receive such applications. It may be sent by hand, presented personally or sent by post.

3. When order is passed, the duplicate form will be returned to the applicant endorsed with the Executive Engineer's final order.

4. The applicant should note in the space provided at No. 3 on the form the name and address of the person to whom the order of the Executive Engineer is to be given and whether the order should be sent by post or delivered from any canal office, or kept at any office to be called for, postal intimation being sent when it is ready for delivery.

5. No sanction will ordinarily be given for the irrigation of any land to any person other than (1) the sole occupant or all joint occupants, (2) the sole superior holder or all joint superior holders, (3) a person having the right to carry on irrigated cultivation of the land for the period of the sanction, or (4) a person duly authorised on behalf of any of these to receive such sanction.

6. The applicant must state at No. 2 on the form the nature of his interest in the land or of his authority to apply for sanction for carrying on irrigated cultivation in the land.

7. Any applicant may be required to furnish a Bond in Form VIII executed by two suitable sureties or execute a mortgage bond in Form IX as security for the payment of all amounts which may become due in respect of the water to be supplied under the sanction. He may also be required to obtain the assent of any person having an interest in the land to the grant of sanction to him.

8. Sanction will be refused for the irrigation of any land which is found to be unsuitable for this form of irrigation.

9. The Executive Engineer will sanction blocks subject to a minimum of and in multiples of 1½ acres. The different half acre plots forming a block may not be contiguous but must be on the same outlet.

CONDITIONS.

1. The area of sugarcane shall not exceed one-third of the total area of the block except as provided below :—

When new sugarcane is to be planted at some time before a standing crop in the same block is cut, permission will be given for such planting, although the total area of the standing crop and the newly planted crop exceeds one-third of the block area, on the following conditions and in the following circumstances :—

(1) that water is available after providing all supplies already sanctioned ;

(2) that the giving of the additional supply required can be arranged for consistently with necessary arrangements for maintenance, repair and working of the canal ;

(3) that if the standing sugarcane crop has been planted between a date which may be notified from time to time and 31st August next following permission shall not be given for the planting of such new sugarcane crop before the break of the monsoon in the following year ;

(4) that if the standing cane crop has been planted between 1st September and a subsequent date which may be notified from time to time permission shall not be given for the planting of such new sugarcane before the standing cane crop is 9 months old ;

(5) that the area of new sugarcane shall not exceed the area of standing sugarcane which satisfies conditions (3) and (4);

(6) that application is made on form VI for the supply of water required in addition to that provided by the original sanction. The charge will be the sugarcan rate for the excess of sugarcane area over one-third and for the period of overlap applied for.

2. No second ratoon of sugarcane shall be allowed. Water shall not be supplied to any piece of land for irrigating more than two sugar-cane crops during any period of five irrigation years.

3. To the remaining two-third area of the block, water shall be given for irrigation for about eight months, from 15th June (if water be available) or from the break of the monsoon till the 14th February following. This area shall not be irrigated either from the canals or wells between the 15th February and the 14th June of the following year except as provided below :—

If water is available, sanction shall be given on Form VI to preseasonal waterings subject to the following conditions :—

(1) No water shall be supplied before 25th April.

(2) Not more than two-third of the whole block area shall be under irrigation at one time whether with canal or well water.

Provided that if water is available, sanction shall be given with effect from 25th May to early watering in the remaining one-third of the area of green manure crops only.

4. If sugarcane is not grown on the full one-third area of the total block area, twice the area in units not so utilised may be planted with other crops (excluding long-term fruit trees and pan gardens). If sugarcane or other crops grown in lieu thereof fail, a similar or lower rated crop or a succession of such crops may be planted in the same or any other equal area of the block in lieu thereof.

5. The block rate shall be payable for the whole area for which the sanction for the supply of water is in force without reference to the nature or extent of irrigated cultivation within the block. If in any particular year the applicant is unable to irrigate the whole or part of the block for which water has been sanctioned, he may be granted exemption from the water rates payable in respect of such whole or part of the block, as the case may be, provided that he applies on Form X for such exemption from water rates before the dates specified below and that the proportion of sugarcane to other crops is not thereby increased in the area that remains over after the said exemption—

(*i*) For the first year of the block period	...	Within one month from the date of sanction.
(*ii*) For subsequent years of the block period	...	Before 15th November preceding the year beginning from February 15th for which exemption is required.

6. The block may be cancelled at the request of the block-holder :—

(*a*) from the beginning of the first year if he applies for cancellation within one month from the date of sanction ; or

(*b*) during the remaining period of sanction if he gives notice of cancellation in writing before the 15th November preceding the year beginning from February 15th from which the block is not required. Provided that the Executive Engineer may at any time after giving twelve months' notice cancel any block or any part of a block if in his opinion further continuance of supply to it is for any reason objectionable.

7. When exemption from water rate is granted in accordance with condition 5 above subsequent permission to irrigate the whole or part of the block area so exempted shall, if water be available, be given only at $1\frac{1}{4}$ times the block rate, subject to the proviso that if it is desired subsequently to irrigate seasonal or two season crops only in the exempted portion permission may be granted at the sanctioned rates provided that an application in Form VII is received before the date fixed in accordance with rule 5 (I) of the Bombay Canal Rules, 1934.

8. When a sugarcane block is cancelled at the request of the irrigator under Condition 6 a further supply of water for the irrigation of sugarcane within the area of the cancelled block shall not be sanctioned within a period of one year from the date of such cancellation.

9. The block sanction is liable to be cancelled or the supply to any crop irrigated under the sanction is liable to be withheld or stopped entirely without any previous notice for breach of any of the above conditions or any rule of the Bombay Canal Rules, 1934.

एकतृतीयांश उंसाच्या ब्लॉकचा अर्ज दिल्याबद्दल अर्जदारास देण्याची पावती.

काल्वा

गावाचे नांव

अर्जदाराचे नांव

सर्व्हे-नंबर

पोट-नंबर

अर्जाची तारीख

अर्ज पोहचल्याची तारीख व शेरा

अर्ज घेणाऱ्या अंमलदाराची सही.

FORM III.

(Original.)

Form of application for water for Irrigation in One-Fourth Sugarcane Blocks.

No. of application.

To—The Executive Engineer, Division.

I, , resident of , Taluka , District , make this application for the supply of water from the canal for years in succession from 15th February 19 to 14th February 19 subject to the provisions of the Bombay Irrigation Act, 1879, and of any other Law for the time being in force relating to Irrigation and subject to the provisions of the Bombay Canal Rules, 1934, and the conditions specified on the reverse of this application to which I agree, for the purpose of irrigating the and hereinafter described, namely :—

Name of village. गांवाचें नांव.	Distributing पाणी वाटणाऱ्या		Survey No. सर्व्हे-नंबर.	Pot No. पोट-नंबर.	Total area of Survey No. or Pot No. सर्व्हे-नंबराचें अगर पोट-नंबराचें एकूण क्षेत्र.	Total area of the holding in Survey No. or Pot No. सर्व्हे-नंबरांतील अगर पोट-नंबरांतील मालकीचें एकूण क्षेत्र.	Total area applied for. मागणीचें क्षेत्र.
	Channel No. पाटाचा नंबर.	Outlet No. दरवाज्याचा नंबर.					
1	2	3	4	5	6	7	8
					A. g.	A. g.	A. g.

2. I am the of the land for which water has been applied for above.

3. The name and address of person to whom and the manner in which the order on this application should be delivered are :—

Date 19 . Signature or left hand thumb impression of the applicant.

Signature of the witness.

Signature or left hand thumb-impression of the occupant or joint occupants or superior holder or joint superior holders, in cases in which the applicant is not the owner.

Forwarded for sanction as follows :—

(1) Block No. (2) Block Plots Nos.

(3) Area to be allotted—Acres Gunthas (4) Period—From To

(5) Water rate per acre to be charged—Rs.

Date 19 . Sub-Divisional Officer, Sub-Division.

Sanctioned.

Date 19 . Executive Engineer, Division.

(*Note.*—Details of Security bond to be furnished by non-owner applicants as per Instruction 7.)

Names of sureties (1) (2) } in Form VIII.

S. No. of given as security as per Form IX.

एकचतुर्थांश उसाच्या ब्लॉकच्या मंजुरीचा समज.

गावाच्या तलाठ्याकडे खाना होण्याकरितां.

काळवा

गांवाचें नांव

अर्जाचा नंबर

सर्व्हे-नंबर

पोट-नंबर

अर्जदाराचें नांव

ब्लॉकांत मंजूर केलेले क्षेत्र प.

मंजुरीची मुदत

१५-२-१९ पासून

१४-२-१९ पर्यंत

अर्जमंजुरीची तारीख

शेरा

कॅनाल ऑफिसर.

तारीख

INSTRUCTIONS.

1. This form is to be used for applications for the supply of water on the block system for the irrigation of sugarcane in those cases where the area of sugarcane permitted to be grown in the block is limited to one-fourth of the block area.

2. The application is to be submitted in duplicate to the Executive Engineer or to any officer authorised by him to receive such applications. It may be sent by hand, presented personally or sent by post.

3. When order is passed, the duplicate form will be returned to the applicant endorsed with the Executive Engineer's final order.

4. The applicant should note in the space provided at No. 3 on the form the name and address of the person to whom this order is to be given and whether it should be sent by post or delivered from any canal office, or kept at any office to be called for, postal intimation being sent when it is ready for delivery.

5. No sanction will ordinarily be given for the irrigation of any land to any person other than (1) the sole occupant or all joint occupants, (2) the sole superior holder or all joint superior holders, (3) a person having the right to carry on irrigated cultivation of the land for the period of the sanction, or (4) a person duly authorised on behalf of any of these to receive such sanction.

6. The applicant must state at No. 2 on the form the nature of his interest in the land or of his authority to apply for sanction for carrying on irrigated cultivation in the land.

7. Any applicant may be required to furnish a Bond in Form VIII executed by two suitable sureties or execute a mortgage bond in Form IX as security for the payment of all amounts which may become due in respect of the water to be supplied under the sanction. He may also be required to obtain the assent of any person having an interest in the land to the grant of sanction to him.

8. Sanction will be refused for the irrigation of any land which is found to be unsuitable for this form of irrigation.

9. The Executive Engineer will sanction blocks subject to a minimum of and in multiples of 1½ acres. The different half acre plots forming a block may not be contiguous but must be on the same outlet.

CONDITIONS.

1. The area of sugarcane shall not exceed one-fourth of the total area of the block, except as provided below :—

When new sugarcane is to be planted at some time before a standing crop in the same block is cut, permission will be given for such planting, although the total area of the standing crop and the newly planted crop exceeds one-fourth of the block area, on the following conditions, and in the following circumstances :—

(1) that water is available after providing all supplies already sanctioned ;

(2) that the giving of the additional supply required can be arranged for consistently with necessary arrangements for maintenance, repair and working of the canal ;

(3) that if the standing sugarcane crop has been planted between a date which may be notified from time to time and 31st August next following permission shall not be given for the planting of such new sugarcane crop before the break of the monsoon in the following year ;

(4) that if the standing cane crop has been planted between 1st September and a subsequent date which may be notified from time to time permission shall not be given for the planting of such new sugarcane before the standing cane crop is 9 months old ;

(5) that the area of new sugarcane shall not exceed the area of standing sugarcane which satisfies conditions (3) and (4);

(6) that application is made on Form VI for the supply of water required in addition to that provided by the original sanction. The charge will be the sugarcane rate for the excess of sugarcane area over one-forth and for the period of overlap applied for.

2. No second ratoon of sugarcane shall be allowed. Water shall not be supplied to any piece of land for irrigating more than two sugarcane crops during any period of five irrigation years.

3. To the remaining three-fourth area of the block, water shall be given for irrigation for about eight months, from 15th June (if water be available) or from the break of the monsoon till the 14th February following. This area shall not be irrigated either from the canals or wells between the 15th February and the 14th June of the following year except as provided below :—

If water is available, sanction shall be given on Form VI to preseasonal waterings subject to the following conditions :—

(1) No water shall be supplied before 25th April.

(2) Not more than three-fourth of the whole block area shall be under irrigation at one time whether with canal or well water.

Provided that if water is available, sanction shall be given with effect from 25th May to early watering in the remaining one-fourth of the area of green manure crops only.

4. If sugarcane is not grown on the full one-fourth area of the block twice the area in units not so utilised may be planted with other crops (excluding long-term fruit trees and pan gardens). If sugarcane or other crops grown in lieu thereof fail, a similar or lower rated crop or a succession of such crops may be planted in the same or any other equal area of the block in lieu thereof.

5. The block rate shall be payable for the whole area for which the sanction for the supply of water is in force without reference to the nature or extent of irrigated cultivation within the block. If in any particular year, the applicant is unable to irrigate the whole or a part of the block for which water has been sanctioned he may be granted exemption from the water rates payable in respect of such whole or a part of the block, as the case may be, provided that he applies on Form X for such exemption from water rates before the dates specified below and that the proportion of sugarcane to other crops is not thereby increased in the area that remains over after the said exemption :—

(*i*) For the first year of the block period	...	Within one month from the date of sanction.
(*ii*) For subsequent years of the block period	...	Before 15th November preceding the year beginning from February 15th for which exemption is required.

6. The block may be cancelled at the request of the block-holder —

(*a*) from the beginning of the first year if he applies for cancellation within one month from the date of sanction ;

(*b*) during the remaining period of sanction if he gives notice of cancellation in writing before the 15th November preceding the year beginning from February 15th from which the block is not required. Provided that the Executive Engineer may at any time after giving twelve months' notice cancel any block or any part of a block if in his opinion further continuance of supply to it is objectionable.

7. When exemption from water rate is granted in accordance with Condition 5 subsequent permission to irrigate the whole or part of the block area so exempted shall, if water be available, be given only at 1½ times the block rate, subject to the proviso that if it is desired subsequently to irrigate seasonal or two season crops only in the exempted portion permission may be granted at the sanctioned rates provided that an application in Form VII is received before the date fixed in accordance with rule 5 (1) of the Bombay Canal Rules, 1934.

8. When a sugarcane block is cancelled at the request of the irrigator under Condition 6 a further supply of water for the irrigation of sugarcane within the area of the cancelled block shall not be sanctioned within a period of one year from the date of cancellation.

9. The block sanction is liable to be cancelled or the supply to any crop irrigated under the sanction is liable to be withheld or stopped entirely without any previous notice for breach of any of the above conditions or any rule of the Bombay Canal Rules, 1934.

एकचतुर्थांश उंसाच्या ब्लॉकचा अर्ज दिल्याबाबत अर्जदारास देण्याची पावती.

काल्वा

गांवाचें नांव

अर्जदाराचें नांव

सर्व्हे-नंबर

पोट-नंबर

अर्जाची तारीख

अर्ज पोंचल्याची तारीख व शेरा

अर्ज घेणाऱ्या अंमलदाराची सही.

FORM IV

(Original.)

Form of application for water for Irrigation in Fruit Blocks.

No. of application.

To—The Executive Engineer, Division.

I, , resident of , Taluka District , make this application for the supply of water from the canal for years in succession from 15th February 19 to 14th February 19 subject to the provisions of the Bombay Irrigation Act, 1879, and of any other Law for the time being in force relating to Irrigation, and of the Bombay Canal Rules, 1934, to which I agree, for the purpose of irrigating the land hereinafter described namely :—

Name of village. गांवाचें नांव.	Distributing पाणी वाटणाऱ्या		Survey No. सर्व्हे-नंबर.	Pot No. पोट-नंबर.	Total area of Survey No. or Pot No. सर्व्हे-नंबरचें अगर पोट-नंबरचें एकूण क्षेत्र.	Total area of the holding in Survey No. or Pot No. सर्व्हे-नंबरांतील अगर पोट-नंबरांतील मालकीचें एकूण क्षेत्र.	Area applied for in the block. ब्लॉकांत मागणीचें क्षेत्र.
	Channel No. पाटाचा नंबर.	Outlet No. दरवाज्याचा नंबर.					
1	2	3	4	5	6	7	8
					A. g.	A. g.	A. g.

2. I am the of the land for which water has been applied for above.

3. The name and address of person to whom and the manner in which the order on this application should be delivered are :—

Date 19 . Signature or left hand thumb-impression of the applicant.

Signature of the witness

Signature or left hand thumb-impression of the occupant or joint occupants or superior holder or joint superior holders in cases in which the applicant is not the owner.

Forwarded for sanction as follows :—

(1) Fruit Block No. (2) Block Plots Nos.

(3) Area to be sanctioned—A. G. (4) Period of sanction—From To

(5) Water rates to be charged per acre—Rs.

Date 19 . Sub-Divisional Officer, Sub-Division.

Sanctioned.

Date 19 . Executive Engineer, Division.

(*Note.*—Details of Security bond to be invariably furnished by non-owner applicants as per Instruction 7.)

Names of sureties (1) (2) } As per Form No. VIII.

S. No. of given as security as per Form IX.

.....

फळझाडाचा ब्लॉक मंजूर केल्याची समज.

गांवच्या तलाठ्याकडे पाठविण्याकरितां.

कालवा

अर्जाचा नंबर

गांवाचें नांव

सर्व्हे-नंबर

पोट-नंबर

अर्जदाराचें नांव

ब्लॉकांत मंजूर केलेलें क्षेत्र

प्र. मं.

मंजुरीची मुदत

१६–२–१९ पासून

१४–२–१९ पर्यंत

मंजुरीची तारीख व शेरा.

तारीख

कॅनाल ऑफिसर.

INSTRUCTIONS.

1. This form is to be used for the irrigation of trees with a normal life of 15 years or more, i.e., excluding plantains, papayas and similar short lived species, in areas in which water can ordinarily be supplied at regular intervals throughout the year.

2. The application is to be submitted in duplicate to the Executive Engineer or to any officer authorised by him to receive such applications. It may be sent by hand, presented personally or sent by post.

3. When order is passed, the duplicate form will be returned to the applicant endorsed with the Executive Engineer's final order.

4. The applicant should note in the space provided at No. 3 on the form the name and address of the person to whom the order of the Executive Engineer is to be given and whether the order should be sent by post or delivered from any canal office, or kept at any office to be called for, postal intimation being sent when it is ready for delivery.

5. No sanction will ordinarily be given for the irrigation of any land to any person other than (1) the sole occupant or all joint occupants, (2) the sole superior holder or all joint superior holders, (3) a person having the right to carry on irrigated cultivation of the land for the period of the sanction, or (4) a person duly authorised on behalf of any of these to receive such sanction.

6. The applicant must state at No. 2 on the form the nature of his interest in the land or of his authority to apply for sanction for carrying on irrgated cultivation in the land.

7. Any applicant may be required to furnish a Bond in Form VIII executed by two suitable sureties or execute a mortgage bond in Form IX as security for the payment of all amounts which may become due in respect of the water to be supplied under the sanction. And he may also berequired to obtain the assent of any person having an interest in the land to the grant of sanction to him.

8. Sanction will be refused for the irrigation of any land which is found to be unsuitable for this form of irrigation.

9. The Executive Engineer will ordinarily sanction areas which are multiples of half an acre.

10. Water passes in respect of this form shall not be granted for a period extending beyond twelve years after the 14th February of the year in whoih the next revision of water rates falls due.

CONDITIONS.

1. The water rates shall be payable provided water is available for the whole area for which the sanction for the supply of water is in force without reference to the nature or extent of irrigated cultivation within the block. The applicant may, however, terminate the block agreement by giving six months' notice in writing.

2. New trees may without special permission be planted to replace those that have died on the distinct understanding that this shall in no way entitle the applicant to an extension of the period of sanction.

3. If the kind of fruit trees applied for and sanctioned do not thrive and another kind is to be grown, the applicant may, after giving three months' notice in writing to the Executive Engineer, grow in lieu thereof any other kind of fruit trees unless the Executive Engineer has within that time cancelled the pass. Also if for any reason the pass for fruit trees cannot be utilised for fruit trees for any period the applicant may, after giving a week's notice in writing to the Executive Enginneer, grow in lieu thereof any other short lived perennials or seasonal crops.

4. If in any particular year the person on whose application the supply is sanctioned is unable to irrigate the whole or a part of the block for which water has been sanctioned he may be granted exemption from the water rates payable in respect of such whole or part of the block, as the case may be, provided that he applies on Form X for such exemption from water rates before the dates specified below :—

(*i*) For the first year of the block period ..	Within one month from the date of sanction.
(*ii*) For subsequent years of the block period ..	Before 15th November preceding the year beginning from February 15th for which exemption is required.

5. When exemption from water rate has been sanctioned in accordance with Condition 4, subsequent permission to irrigate the area so exempted in the cold and hot weather seasons shall, if water be available, be given only at 1¼ times the rate prescribed for the respective seasons.

6. A block may be cancelled at the request of the blockholder—

(*a*) from the beginning of the first year if he applies for cancellation within one month from the date of sanction ;

(*b*) during the remaining period of sanction if he gives notice of cancellation in writing before the 15th November preceding the year beginning from February 15th from which the block is not required.

Provided that the Executive Engineer may at any time after giving twelve months' notice cancel any block or any part of a block if in his opinion further continuance of supply to it is objectionable.

7. The block sanction is liable to be cancelled or the supply to any crop irrigated under the sanction is liable to be withheld or stopped entirely without any previous notice for breach of any of the above conditions or any rule of the Bombay Canal Rules, 1934.

.....

फळझाडाचा नमुना नंबर ४ मधील

अर्ज पोचल्याची पावती.

काळवा

गांवाचें नांव

अर्ज-नंबर

सर्व्हे-नंबर

पोट-नंबर

अर्जदाराचें नांव

प्र. मुं.

मागणीचें क्षेत्र

मागणीप्रमाणें मुदत

१५-२-१९ पासून

१४-२-१९ पर्यंत

अर्ज पोचल्याची तारीख व शेरा

अर्ज घेणाऱ्या अमलदाराची सही.

FORM V.

(Original.)

Form of application for water for Irrigaton in Garden Blocks.

No. of application.

To—The Executive Engineer, Division.

I , resident of , Taluka District , make this application for the supply of water from the canal for years in succession from 15th February 19 to 14th February 19 subject to the provisions of the Bombay Irrigation Act, 1879, and of any other Law for the time being in force relating to Irrigation, and of the Bombay Canal Rules, 1934, to which I agree, for the purpose of irrigating the land hereafter described, namely :—

Name of village. गांवाचें नांव.	Distributing पाणी वाटणाऱ्या		Survey No. सर्व्हे-नंबर.	Pot No. पोट-नंबर.	Total area of Survey No. or Pot No. सर्व्हे नंबरचें अगर पोट-नंबरचें एकूण क्षेत्र.	Total area of the holding in Survey No. or Pot No. सर्व्हे-नंबरांतील अगर पोट-नंबरांतील मालकीचें एकूण क्षेत्र.	Area applied for in the block: ब्लॉकांत मागणीचें क्षेत्र.
	Channel No. पाटाचा नंबर.	Outlet No. दरवाज्याचा नंबर.					
1	2	3	4	5	6	7	8
					A. g.	A. g.	A. g.

2. I am the of the land for which water has been applied for above.

3. The name and address of person to whom and the manner in which the order on this application should be delivered are :—

Date 19 . Signature or left hand thumb impression of the applicant.

Signature of the witness.

Signature or left hand thumb-impression of the occupant or joint occupants or superior holder or joint superior holders in cases in which the applicant is not the owner.

Forwarded for sanction as follows :—

(1) Garden Block No. (2) Block Plots Nos.

(3) Area to be sanctioned—A. G. (4) Period of sanction—From To

(5) Water rates to be charged per acre—Rs.

Date 19 . Sub-Divisional Officer, Sub-Division.

Sanctioned.

Date 19 Executive Engineer, Division.

(*Note.*—Details of Security bond to be invariably furnished by non-owner applicants as per Instruction 7.)

Names of sureties (1) (2) } As per Form No. VIII.

S. No. of given as security as per Form IX.

इतर बारमाही पिकांचा नमुना नंबर ५
मधील ब्लॉकांचा अर्ज मंजूर केल्याची समज.
गांवच्या तलाठ्याकडे पाठविण्याकरितां.

कालवा	
अर्जाचा नंबर	
गांवाचें नांव	
सब्ह-नंबर	
पाट-नंबर	
अर्जदाराचें नांव	
ब्लॉकांत मंजूर केलेले क्षेत्र	ए. गुं.
मंजुरीची मुदत	
१५-२-१९	पासून
१४-२-१९	पर्यंत
मंजुरीची तारीख व शेरा	
तारीख	कॅनाल ऑफिसर.

Instructions.

1. This form is to be used for the irrigation of perennial crops other than sugarcane, pan or long term fruit trees in areas in which water can ordinarily be supplied at regular intervals throughout the year.

2. The application is to be submitted in duplicate to the Executive Engineer or to any officer authorised by him to receive such applications. It may be sent by hand, presented personally or sent by post.

3. When order is passed, the duplicate form will be returned to the applicant endorsed with the Executive Engineer's final order.

4. The applicant should note in the space provided at No. 3 on the form the name and address of the person to whom the order of the Executive Engineer is to be given and whether the order should be sent by post or delivered from any canal office, or kept at any office to be called for, postal intimation being sent when it is ready for delivery.

5. No sanction will ordinarily be given for the irrigation of any land to any person other than (1) the sole occupant or all joint occupants, (2) the sole superior holder or all joint superior holders, (3) a person having the right to carry on irrigated cultivation of the land for the period of the sanction, or (4) a person duly authorised on behalf of any of these to receive such sanction.

6. The applicant must state at No. 2 on the form the nature of his interest in the land or of his authority to apply for sanction for carrying on irrigated cultivation in the land.

7. Any applicant may be required to furnish a Bond in Form VIII executed by two suitable sureties or execute a mortage bond in Form IX as security for the payment of all amounts which may become due in respect of the water to be supplied under the sanction. He may also be required to obtain the assent of any person having an interest in the land to the grant of sanction to him.

8. Sanction will be refused for the irrigation of any land which is found to be unsuitable for this form of irrigation.

9. The Executive Engineer will ordinarily sanction areas which are multiples of half an acre.

10. Water passes in respect of this form shall not be granted for a period extending beyond the period of the sugarcane block sanctioned on the canal concerned at the time of sanctioning this form. If the sanctioned period of the sugarcane blocks at the time exceeds three years, this form shall not be sanctioned for a period less than three years.

Conditions.

1. The water rates shal be payable provided water is available for the whole area for which the sanction for the supply of water is in force without reference to the nature or extent of irrigated cultivation within the block.

2. If for any reasor the person on whose application the supply is sanctioned is unable to cultivate perennial crops in the sanctioned block or a part thereof for any period he may grow in lieu thereof any seasonal crops or a succession of such crops.

3. If in any particular year the person on whose application the supply is sanctioned is unable to irrigate the whole or part of the block for which water has been sanctioned, he may be granted exemption from the water rates payable in respect of such whole or part of the block, as the case may be, provided that he applies on Form X for such exemption from water rates before the dates specified below :—

(*i*) For the first year of the block period ...	... Within one month from the date of sanction.
(*ii*) For subsequent years of the block period	... Before 15th November preceding the year beginning from February 15th for which exemption is required.

4. When exemption from water rates has been sanctioned in accordance with condition 3 above, subsequent permission to irrigate the area so exempted in the cold and hot weather seasons shall, if water be available, be given only at 1½ times the rate prescribed for the respective seasons.

5. A block may be cancelled at the request of the block-holder—

(*a*) from the beginning of the first year if he applies for cancellation within one month from the date of sanction ;

(*b*) during the remaining period of sanction if he gives notice of cancellation in writing before the 15th November preceding the year beginning from February 15th from which the block is not required.

Provided that the Executive Engineer may at any time after giving twelve months' notice cancel any block or any part of a block if in his opinion further continuance of supply to it is objectionable.

6. The block sanction is liable to be cancelled or the supply to any crop irrigated under the sanction is liable to be withheld or stopped entirely without any previous notice for breach of any of the above conditions or any rule of the Bombay Canal Rules, 1934.

इतर बाराही पिकाचा नमुना नंबर ५ मधील

ब्लाकाचा अर्ज पोचल्याची पावती.

काल्वा

गांवाचें नांव

अर्ज-नंबर

सर्व्हे-नंबर

पोट-नंबर

अर्जदाराचें नांव

मागणीचें क्षेत्र ए. गुं.

मागणीप्रमाणें मुदत

१५-२-१९ पासून

१४-२-१९ पर्यंत

अर्ज पोचल्याची तारीख व शेरा

अर्ज घेणाऱ्या अमलदाराची सही.

FORM VI.

(Original).

Form of application for water for additional waterings.

No. of application.

To—The Executive Engineer, Division.

I , resident of , Taluka , District , make this application for the supply of water from the canal for the purpose of irrigating the undermentioned land hereinafter described subject to the provisions of the Bombay Irrigation Act, 1879, and any other Law for the time being in force relating to Irrigation and all the provisions of the Bombay Canal Rules, 1934 and subject to the conditions specified on the reverse of this application to which I agree.

Name of village. गांवाचें नांव.	Distributing. पाणी वाटणाऱ्या.		Survey No. सर्व्हे-नंबर.	Pot No. पोट-नंबर	Total area of Survey No. or Pot No. सर्व्हे-नंबरचें अगर पोट-नंबरचें एकूण क्षेत्र.	Total area of the holding in Survey No. or Pot No. सर्व्हे-नंबरांतील अगर पोट-नंबरांतील मालकीचें एकूण क्षेत्र.	Total area applied for. मागणीचें क्षेत्र.	Name of crop. पिकाचें नांव.	Period for which water is required. ज्या मुदतींत पाणी पाहिजे ती मुदत.
	Channel No. पाटाचा नंबर	Outlet No. दरवाजाचा नंबर.							
1	2	3	4	5	6	7	8	9	10
					A. g.	A. g.	A. g.		

2. I am the of the land for which water has been applied for above.

3. I hold a *seasonal pass* / *block pass* *for the* *season of 19* .
I have submitted herewith a block application for the years *for the year ending 14th February 19* .

4. The name and address of the person to whom and the manner in which the order on this application should be delivered are :—

Date 19 .

Signature or left hand thumb impression of the applicant.

Signature of the witness

Signature or left hand thumb impression of the occupant or joint occupants or superior holder or joint superior holders in cases in which the applicant is not the occupant or superior holder.

Forwarded for sanction as follows :—

(1) Area to be sanctioned—A. g. (2) Period of sanction—From To

(3) Water rate to be charged per acre—Rs.

Date 19 Sub-Divisional Officer, Sub-Division

Sanctioned.

Date 19 Executive Engineer, Division.

(*Note.*—Details of Security bond to be invariably furnished by non-owner applicants as per instruction 6.)

Names of sureties—(1) } As per Form No. VIII.

(2)

Survey No. of given as security as per Form IX.

नमुना नंबर ९ मधील अर्ज मंजूर झाल्याची गांवच्या तलाठ्याकडे पाठविण्याची समज.

काळवा

अर्जाचा नंबर

गांवाचें नांव

सर्व्हे-नंबर

पोट-नंबर

अर्जदाराचें नांव

मंजुरीचें पीक, हंगाम व क्षेत्र

पीक.	हंगाम व मुदत.	क्षेत्र.	
		ए.	गु.
पावसाळी ...			
रबी ...			
उन्हाळी ...			
ऊस ...			
साम न्य बारमाही पीक.			

मंजुरीची तारीख व शेरा

कॅनाल ऑफिसर.

तारीख महे सन १९ .

Instructions.

1. This form is to be used for additional waterings only, i.e., for waterings required for areas already sanctioned under any one of the other forms of applications laid down under rule 4 (3) of the Bombay Canal Rules, 1934, for short periods not covered by the respective sanctions.

2. The application is to be submitted in duplicate to the Executive Engineer or to any officer authorised by him to receive such applications. It may be sent by hand, presented personally or sent by post.

3. When order is passed the duplicate form will be returned to the applicant endorsed with the Executive Engineer's final order.

4. The applicant should note in the space provided under entry No. 4 on the form the name and address of the person to whom the order of the Executive Engineer is to be given and whether the order should be sent by post, or delivered from any canal office, or kept at any office to be called for, postal intimation being sent when it is ready for delivery.

5. No sanction on this form will be given for the irrigation of any land for the irrigation of which a seasonal, a perennial, or a block pass has not already been issued or a seasonal perennial or a block application is not submitted along with this form. At No. 3 on the form the applicant must state the number and kind of pass he holds.

6. Any applicant may be required to furnish a Bond in Form VIII executed by suitable sureties or execute a mortgage bond in Form IX as security for the payment of all amounts which may become due in respect of the water to be supplied under the sanction. He may also be required to obtain the assent of any person having an interest in the land to the grant of sanction to him.

7. The Executive Engineer will ordinarily sanction areas which are multiples of half acre.

Conditions.

1. After an application has been sanctioned, full water rates shall be payable for the area and period sanctioned by the Executive Engineer whether the area is irrigated or not, provided water was available during the period. No water rate shall be charged in the case of perennial crops when the applicant gives a written intimation to the Executive Engineer within one month from the date of sanction to the application that water is not required.

The sanctioned area shall not be exceeded.

3. The sanction is liable to be cancelled or the supply to any crop irrigated under this anction is liable to be withheld or stopped entirely without notice for breach of any rule of the Bombay Canal Rules, 1934, or of condition 2.

नमुना नंबर ६ मधील अर्ज मिळाल्या.
बाबत अर्जदारास देण्याची पावती.

काल्वा
सर्व्हे-नंबर
पोट-नंबर
अर्जदाराचे नांव

मागणीप्रमाणे पीक, हंगाम व क्षेत्र.

पीक.	हंगाम व मुदत.	क्षेत्र.	
		ए.	गु.
पावसाळी ...			
रबी ...			
उन्हाळी ...			
उस ...			
सामान्य बारमाही पिके.			

अर्जाची तारीख

अर्ज मिळाल्याची तारीख व शेरा

अर्ज घेणाऱ्या अंमलदाराची सही.

FORM VII.

(Original.)

Ordinary application for water for irrigation.

No. of application

To—The Executive Engineer, Division.

I, , resident of , Taluka , District , make this application for the supply of water from the canal for the purpose of irrigating the undermentioned land hereinafter described subject to the provisions of the Bombay Irrigation Act, 1879, and any other law for the time being in force relating to Irrigation and all the provisions of the Bombay Canal Rules, 1934, and subject to the conditions specified on the reverse of this application to which I agree :—

Name of village गांवाचें नांव.	Distributing पाणी वाटणाऱ्या		Survey No. सर्व्हे-नंबर.	Pot No. पोट-नंबर	Total area of Survey No. or Pot No. सर्व्हे-नंबरचें अगर पोट-नंबरचें एकूण क्षेत्र.	Total area of the holding in Survey No. or Pot No. सर्व्हे-नंबरांतील अगर पोट-नंबरांतील मालकीचें एकूण क्षेत्र.	Total area applied for मागणीचें क्षेत्र.	Name of crop. पिकाचें नांव.	Period for which water is required. ज्या मुदतींत पाणी पाहिजें ती मुदत.
	Channel No. पाटाचा नंबर.	Outlet No. दरवाज्याचा-नंबर.							
1	2	3	4	5	6	7	8	9	10
					A. g.	A. g.	A. g.		

2. I am the of the land for which water has been applied for above.

3. I have paid all arrears of water rates up to and including the season of 19 . I am in arrears of water rates for the only.

4. The name and address of person to whom and the manner in which the order on this application should be delivered are :—

Signature or left hand thumb

Date 19

Signature of the witness

impression of the applicant.

Signature or left hand thumb impression of the occupant or joint occupants or superior holder or joint superior holders in cases in which the applicant is not the occupant or superior holder

Forwarded for sanction as follows :—

(1) Area to be sanctioned (2) Period of sanction — From

To (3) Water rate to be charged per acre Rs.

Date 19 Sub-Divisional Officer, Sub-Division.

Sanctioned.

Date 19 Executive Engineer, Division.

(*Note.*—Details of Security bond to be invariably furnished by non-owner applicants as per instruction 7.)

Names of sureties (1) As per Form No. VIII.

(2)

S. No. of given as security as per Form IX.

.....

नमुना नंबर ७ मंजूर झाल्याबाबत गांवच्या तलाठ्याकडे पाठविण्याची समज.

कालवा

अर्जाचा नंबर

गांवाचें नांव

सर्व्हे-नंबर

पोट-नंबर

अर्जदाराचें नांव

मंजूर केलेले क्षेत्र.	एकर.	गुंठे.
१ पाणी ...		
पावसाळी ...		
रबी ...		
दोनहंगामी ...		
उन्हाळी ...		
उंस ...		
सामान्य बारमाही पिकें ...		

मंजुरीची तारीख व शेरा

कॅनाल ऑफिसर.

तारीख

Instructions.

1. This form is to be used for such Irrigation only for which no other special form has been prescribed in rule 4 (3) of the Bombay Canal Rules, 1934.

2. The application is to be submitted in duplicate to the Executive Engineer or to any officer authorised by him to receive such applications. It may be sent by hand, presented personally or sent by post.

3. When order is passed, the duplicate form will be returned to the applicant endorsed with the Executive Engineer's final order.

4. No sanction will ordinarily be given for the irrigation of any land to any person other than (1) the sole occupant or all joint occupants, (2) the sole superior holder or all joint superior holders, (3) a person having the right to carry on irrigated cultivation of the land for the period of the sanction, or (4) a person duly authorised on behalf of any of these to receive such sanction.

5. The applicant must state at No. 2 on the form the nature of his interest in the land or of his authority to apply for sanction for carrying on irrigated cultivation in the land. He must also state at No. 3 on the form the season up to and including which he has paid arrears of water rates. If he owes any water rates he must state the seasons or years for which he does so.

6. The applicant should note in the space provided at No. 4 on the form the name and address of the person to whom the order on this form is to be given and whether it should be sent by post, or delivered from any canal office, or kept at any office to be called for, postal intimation being sent when it is ready for delivery.

7. Any applicant may be required to furnish a Bond in Form VIII executed by two suitable sureties or execute a mortgage bond in Form IX as security for the payment of all amounts which may become due in respect of the water to be supplied under the sanction. And he may also be required to obtain the assent of any person having an interest in the land to the grant of sanction to him.

8. Sanction will be refused for the irrigation of any land which is found to be unsuitable for this form of irrigation.

9. The Executive Engineer will ordinarily sanction areas which are multiples of half an acre.

Conditions.

1. After an application has been sanctioned, full water rates shall be payable for the area and period sanctioned by the Executive Engineer whether the area is irrigated or not, provided water was available during the period. No water rate shall be charged in the case of perennial crops when the applicant gives a written intimation to the Executive Engineer within one month from the date of sanction to the application that water is not required.

2. Each type of crop (namely, sugarcane, pan, ordinary perennial, two season and seasonal) shall be grown only to the extent of the sanction shown on the pass, but an equal area of any lower rated type may be substituted.

3. The area sanctioned shall not be exceeded.

4. The sanction is liable to be cancelled or the supply to any crop irrigated under the sanction is liable to be withheld or stopped entirely without notice for breach of any rule of the Bombay Canal Rules, 1934, or of any of the conditions of this form of application.

Additional conditions, 5, 6 and 7 for Irrigation Works mentioned in the schedule given below them.

5. Water shall be given for the whole season, if available, or at the discretion of the Executive Engineer, for as many waterings as may be possible.

6. Full water supply is not guaranteed but an intimation of the possibility of a shortage of water during the season for which application is made shall be given at the earliest date possible.

7. Where no permanent water channel exists, the irrigator shall allow the construction of a temporary channel through his land, if necessary along a line fixed by the Executive Engineer or his representative, for the benefit of irrigators whose fields are situated below his land :—

SCHEDULE.

Names of tanks or Canals.

Bhatodi Tank.	Kasurdi Tank.	Muchkundi Tank.
Ashti Tank.	Bhadalwadi Tank.	Shirsuphal Tank.
Koregaon Tank.	Matoba Tank.	Parsul Tank.
Pathri Tank.	Kadwa River Works.	Girna Left Bank Canal.
Jamda Canals.	Krishna Canal.	Hathmati and Khari Cut Canals.
Hartala Tank.	Rewari Canal.	Wangorli Tank.
Mhaswa Tank.	Upper Man River Works.	Savli Tank.
Lower Panjhra River Works.	Yerla River Irrigation Works.	Saiat Tank.
Shahada Channel.	Chikhli Canal.	Tranza Nagramma Tank.
Maini Tank Canal.	Mhaswad Tank.	Futelao Tank.
Non-perennial sections of the Mutha Canals.		Muvalia Tank.
Non-perennial sections of the Godavari Canals.		Timba Tank.*
Non-perennial sections of the Pravara Canals.		Goblaj Tank.
Non-perennial sections of the Nira Right Bank Canal.		Galki Tank.

Condition 7 above and 8 below apply to Ekruk tank in addition to conditions 1 to 4.

8. Water for any area of sugarcane sanctioned is subject to the condition that water is liable to be withheld from new sugarcane area after 31st May, if necessary. Each consecutive watering after 31st May shall require the sanction of the Executive Engineer. Such sanction shall be accorded if water is available in the tank for agricultural purposes but if it is insufficent at any time of the seasons all further waterings may be stopped and the irrigator shall not in that case claim compensation for any damage to the sugarcane crop due to shortage of water.

.....

अर्जदारास अर्ज मिळाल्याबाबत देण्याची पावती.

नमुना नंबर ७.

काळवा
सर्व्हे-नंबर
पोट-नंबर
अर्जदाराचें नांव.

मागणीचें क्षेत्र.	एकर.	गुंठे
१ पाणी ...		
पावसाळी ...		
रबी ...		
दोनहंगामी ...		
उन्हाळी ...		
ऊस ...		
सामान्य बारमाही पिकें ...		

अर्जाची तारीख
अर्ज मिळाल्याची तारीख व शेरा
अर्ज घेणाऱ्या अंमलदाराची सही.

* G. N., P. W. D., No. 2353/27, dated 19th March 1935.

FORM VIII.

Form of Security Bond.

Whereas resident of Taluka District has applied for a supply of water to irrigate the land hereinbelow described, namely :—

Village.	Taluka.	Survey No.	Pot No.	Area of field to be irrigated.	Name of crop or block.	Period of Irrigation.

and whereas he has been required to furnish security for the payment of water rates and other charges :

We resident of Taluka District and resident of Taluka District do hereby delcare ourselves sureties for the abovementioned that he shall duly pay at the prescribed time or times every rate, charge penalty or other sum whatsoever that shall become due from him in respect of the supply of water granted to him in pursuance of his said application ; and in case of his making default therein we, each of us, for himself, his heirs, executors and administrators, agree to pay to the Governor of Bombay such sum not exceeding in the aggregate rupees as shall be demanded of us, or of either of us, or of any heir, executor or administrator of either of us, on account of any such rate, charge, penalty or other sum aforesaid ;

and we do further agree that the amount of any such rate, charge, penalty or other sum aforesaid may, if necessary, be recovered from either of us or from any heir, executor or administrator of either of us, as if the same were an arrear of land revenue due from us, or either of us, to Government.

Dated and signed this day of 19 In the presence of (1)

and (2) (Signature of surety.)

(1) (Signature of witness.)

(2) (Signature of witness.) (Signature of surety.)

FORM IX.

Whereas I resident of Taluka District have applied for a supply of water from the canal to irrigate the land hereinbelow described, namely :—

Village.	Taluka.	Survey No.	Pot No.	Area of field to be irrigated.	Name of crop or block.	Period of irrigation.
				A. g.		

and Whereas I have been required to furnish security for the payment of water rates and other charges in respect of the water supply.

I do hereby mortgage to the Government of Bombay the land hereinbelow described to which I am absolutely entitled free of any encumbrance and of which I am the rightful owner.

District.	Taluka.	Village.	Survey No.	Pot No.	Area of holding in the Survey No.	Remarks.
					A. g.	

and I also hereby agree for myself, my heirs, executors and administratoras that in the event of my failure, to pay any part of the said water rate and other charges at the appointed time and place the Government of Bombay shall be at liberty to cause the said land to be sold and the sale proceeds to be applied in payment of the whole amount that may be outstanding from me at the time of salein respect of the aid supply of water.

And I further agree that it shall be lawful for the Government of Bombay to cause the said land to be sold without the intervention of the Court under section 69 of the Transfer of Property Act, 1882, in case the said water rate and other charges or any part thereof have not been paid by me within 3 months from the date on which a written notice is served on me after the water rate and other charges have become due.

Dated and signed this day of 19 (Signature) in th presence of (1 Name) and (2 Name)

(Signature of witness.) (1)

(Signature of witness.) (2)

FORM X.

Application for exemption from water rates for *block.*

To—The Executive Engineer, Division.

I , resident of , Taluka in the District, make this application for stopping my supply of water from the canal and exemption of water rates in respect of the block described below :—

Name of village गांवाचें नांव.	Distributing पाणी वाटणाऱ्या		Survey No. सर्व्हे नंबर.	Pot No. पोट-नंबर.	Block No. ब्लॉक-नंबर.	Plot No. प्लॉट-नंबर.	Reference to the No. of sanctioned block application. मंजूर केलेल्या ब्लॉकचा अर्ज-नंबर.	Area of sanctioned Block. ब्लॉकांतील मंजुरीचें क्षेत्र.	Area for which exemption is required. ज्या क्षेत्रास माफी पाहिजे तें क्षेत्र.	The year for which and brief reasons why exemption is required. माफीचें वर्ष व माफी कां पाहिजे त्याचीं थोडक्यांत कारणें.
	Channel No. पाटाचा नंबर.	Outlet No. दरवाज्याचा नंबर.								
1	2	3	4	5	6	7	8	9	10	11
								A. g.	A. g.	

2. Name and addressed of the person to whom and the manner in which the order on this application should be delivered are :—

Date 19

Signature or left hand thumb impression of the applicant

Signature of the witness

Forwarded for sanction as follows :—

(1) Area to be exempted—A G (2) Period—From To

Dated 19 Sub-divisional Officer, Sub-division.

Sanctioned.

Date 19 Executive Engineer. Division.

A

कालवा.

ब्लॉकांतील पाणीपट्टीची माफी मिळण्याविषयीं अर्जदारानें अर्ज केल्यावरून ती मंजूर झाल्याबद्दल त्यास समज.

गांवाचें नांव

अर्जदाराचें नांव

अर्जाची तारीख

माफी द्यावयास मंजूर केलेल्या प्लॉटाचें एकूण क्षेत्र.						मंजूर केलेल्या माफीची मुदत. शेरा.	
सर्व्हे-नंबर.	पोट-नंबर.	ब्लॉक-नंबर.	प्लॉट-नंबर.	माफीच्या प्लॉटाचें एकूण क्षेत्र.	पासून	पर्यंत.	

तारीख १९

कॅनाल ऑफिसर.

B

माफीसाठींचा अर्ज पोहोंचल्याची पावती.

माफीचें वर्ष

ब्लॉकची जात

माफी मागितलेल्या ब्लॉकचे सर्व्हे-नंबर

पोट-नंबर

अर्ज पोहोंचल्याची तारीख

अर्ज घेणाऱ्या अंमलदाराची सही.

Instructions.

1. This form is to be used whenever necessary for applying for stoppage of supply of water to the whole or part of a sanctioned block and exemption from water rates in respect of same.

2. The application need not be submitted in duplicate. The application should be submitted to the Executive Engineer or to any officer authorised by him to receive such applications. It may be sent by hand, presented perosnally or sent by post.

3. When an order is passed,cou nterfoil A of the form will be sent to the applicant with the order recorded on it.

4. The applicant should note in the space provided at No. 2 on the form the na me and address of the person to whom the said order is to be given and whether the order shuold be sent by post or delivered from any canal office, or or kept at any office to be called for, postal intimation being sent when it is ready for delivery.

5. This application must be submitted before the dates specified below :—

(*i*) For the first year of the block period.....Within one month from the date of sanction.

(*ii*) For subsequent years of the block period—

(*a*) In respect of sugarcane fruit and garden blocks.....Before 15th November preceding the year beginning from February 15th for which exemption is required.

(*b*) In respect of two-season blocks.....Before 15th September preceding the cold weather season for which exemption is required.

6. When exemption from water rate is granted subsequent permission to irrigate the whole or part of the block area so exempted shall, if water is available, be given only at 1½ times the block rate in the case of sugarcane blocks, 1½ times the rate prescribed for the cold weather season in the case of two season blocks and 1¼ times the rates prescribed for the cold weather and hot weather seasons in respect of fruit and garden blocks. Subsequent irrigation of seasonal or two season crops in the exempted area of sugarcane blocks only will however be permitted —at the sanctioned rates provided that an application Form VIII is submitted before the dates fixed inaccordance with Canal rule 5 (1) of the Bombay Canal Rules,1934.

G. N., P. W. D., No. 263/36, dated 18th November 1936 (B. G., Pt. I, p. 2510).

In exercise of the powers conferred by rule 3 of the Bombay Canal Rules, 1934, published in Government Notification in the Public Works Department, No. 2353/27, dated the 4th January 1934, the Governor in Council is pleased to exempt permanently the irrigation works mentioned in the Schedule hereto appended from the operation of rules 9, 11 and 12 of the said rules :—

Schedule.

1. Hathmati and Khari Cut Canals.
2. Wangroli Tank.
3. Savli Tank.
4. Saiat Tank.
5. Tranza Nagrama Tanks.
6. Futelao Tank.
7. Goblaj Tank.
8. Galki Tank.
9. Timba Tank.
10. Muvalia Tank.

G. N., R. D., No. 5159, dated 20th April 1918, (B. G., Pt. I).

In exercise of the powers conferred by section 89 of the Bombay Irrigation Act, 1879 (Bom. VII of 1879), the Governor in Council is pleased to make the following rules, namely :— **Bombay Irrigation Record of Rights Rules, 1918.**

1. (1) These rules may be called the Bombay Irrigation Record of Rights Rules, 1918.

(2) In these rules—

(*a*) "Canal Officer" when mentioned with reference to any matter in the rules, means a Canal Officer duly empowered to act in such matter ;

(*b*) "the Act" means the Bombay Irrigation Act, 1879.

2. (*a*) The Record of Rights prepared under section 76 of the Act shall be in Form 1.

Form of the Record.

(*b*) It shall be prepared separately for each village.

(*c*) A map shall be attached to each Record, and such map shall be either the ordinary printed village map or a map specially prepared for the purpose, which shall exhibit the source of irrigation, the method of catchment or supply, the line of overflow, the lines of distribution, and the character of the outlets, sluices or other means of regulation and distribution.

3. Under the instruction of the Canal Officer a preliminary Record and map shall be prepared in the form prescribed in rule 1 according to the information obtained under section 76(*1*) of the Act and from local inquiry. Each entry shall be verified by the Canal Officer on the land itself after due notice has been given to the parties concerned.

Preparation of a preliminary Record.

4. The preliminary Record and map shall be kept open to inspection in the chavdi or other place in the village used as a chavdi for a period of 3 months from the date on which the village officer shall notify by beat of drum in the village that the Record and map are open to such inspection.

Publication and inspection of the preliminary Record.

5. (*a*) Any objection to any entry in the preliminary Record shall be made before the expiry of the period prescribed in rule 4 to the village accountant or other officer authorised by the Canal Officer in this behalf.

Objections and appeals.

(*b*) Such officer shall record the substance of each objection on a separate sheet of paper and append it to the preliminary Record ; provided that where the same objection is made by one person or body of persons in respect of several entries or where several persons jointly make the same objection, the objection may at the discretion of the officer be recorded on one sheet.

(*c*) The Canal Officer shall make a summary inquiry into all such objections and pass orders upon them. When any competent civil court has adjudicted upon the dispute, the Canal Officer's decision shall follow such adjudication. Otherwise his decision shall follow the present actual enjoyment and possession of the rights claimed.

(*d*) An appeal will lie from the decision of the Canal Officer to the Assistant or Deputy Collector in charge in of the taluka.

(*e*) The parties shall be informed in writing of the decision passed on an objection or in appeal and the fact of such communication shall be recorded in the proceedings.

Preparation and publication of the final Record.

6. (*a*) After the objections, if any, have been decided, the preliminary Record and map shall be revised in accordance with the decisions passed on the objections or in appeal and shall be submitted to the sub-divisional officer for approval.

(*b*) After approval a fair copy of the Record and map shall be prepared as the Record under the Act and shall be published as provided in section 81 of the Act by beat of drum.

(*c*) The fact of such publication shall be certified on the Record.

Custody of the Record.

7. The Record and map shall be kept in the village records till it is rewritten and thereafter shall be recorded in the taluka record room for a period of 30 years.

Revision of the Record.

8. (*a*) The village accountant shall make an entry in a diary of mutations, to be kept in Form 2, respecting any mistake or change in the particulars contained in the Record or the result of any suit or proceeding referred to in section 83 affecting the Record as soon as such fact comes to his notice.

(*b*) The Canal Officer shall read out the entry to the parties concerned, and after satisfying himself of the correctness of the entry and inspecting the ground when such inspection is relevant, and disposing of any objection raised by the parties, and after the decision of any appeal that may be made, shall revise and certify the entry in Form 2 in accordance with the final decision.

(*c*) Certified entries in Form 2 shall be incorporated in the Record by scoring out the original entry so as not to render it illegible and by writing the correction beneath the cancelled particulars. The number of the entry in Form 2 shall be noted against the revised entry.

(*d*) The revised entry shall be signed by the Cancal Officer and shall be published in the manner prescribed in rule 6.

Rewriting of the Record.

9. (*a*) When in view of the condition of the Record or the number of corrections the Canal Officer is of opinion that the Record should be rewritten, he shall certify all entries up to date in Form 2 and incorporate them in Form 1.

(*b*) A fair copy shall then be prepared, omitting all cancelled entries but including references to the diary of mutations.

(*c*) This copy, after being compared and certified by the Canal Officer, shall be the Record for the purposes of the Act and rules.

(*d*) The diary of mutations shall be recorded in the taluka record room and kept for 30 years.

10. Copies of extracts from the Record shall be given by the Village Accountant in accordance with, and at the same fees as are prescribed in, the rules for the time being in force for the grant of extracts from the Record of Rights maintained under the Bombay Land Revenue Code, 1879. Copies of the map shall be given by the Canal Officer on payment of the fees prescribed for copies of maps granted under that Code.

FORM 1.

(*See* RULE 2.)

Irrigation Record of Rights.

Village *Taluka*

Work

(Here enter description of work and any memorable facts, such as source of water supply and manner of distribution, height of water, manner of rotation, procedure regarding disputes etc.)

Survey number and sub-division.	Area under irrigation.	Water assessment or water share of the consolidated assessment.	Right of the land to water and condition upon which it is enjoyed.	In what way water is actually taken.	Remarks.
1	2	3	4	5	6

(Signature and title of Canal Officer preparing the Record.)

FORM 2.

(*See* RULE 8.)

Diary of mutations in the Irrigation Record of Rights.

Serial number.	Nature of change or correction.	S. No. and Hissas affected.	Notes of enquiry, admission, and orders of Canal Officer, or appellate orders, in disputes.
1	2	3	4

THE BOMBAY LANDING AND WHARFAGE FEES ACT, 1882 (BOM. VII OF 1882).

G. N., R. D., No. 1892-A, dated 26th July 1921 (B. G., Pt. I, p. 1799). S. 2.

Amended by G. N., R. D., No. 1270-G, dated 13th January 1922.
Amended by G. N., R. D., No. 223/24, dated 18th November 1925.
Amended by G. N., R. D., No. C-1270, dated 6th June 1929.
Amended by G. N., R. D., No. 159/28, dated 26th July 1933.
Amended by G. N., R. D., No. 1270-C(a), dated 9th November 1935.
Amended by G. N., R. D., No. 223/24(d), dated 26th March 1936.
Amended by G. N., R. D., No. 9546/45(a) dated 26th April 1949.

In exercise of the powers conferred by section 2 of the Bombay Landing and Wharfage Fees Act, 1882 (Bom. VII of 1882), and in supersession of Government Notification in the Revenue Department, No. 1012, dated the 26th January 1917, as amended by Government Notification in the Revenue Department, No. 13032, dated the 29th November 1919, the Governor in Council is pleased to extend the said Act to the following ports§ in the Bombay Presidency, namely :—

Group I.

Broach.	Ulwa.*	Panwel (Ulwa).*	Jaygad.*
Surat.	Thana.	Mora.*	Jaitapur.*
Bassein.	*******	Karanja.*	Viziadurg.*
Bombay.*	Rewas.*	Mandad.	Vengurla.*
Bhiwandi.	Dharamtar.*	Harnai.*	Karwar.*
Kalyan.	Trombay.*	Dabhol.*	Ankola.
			Kumta.*
			Honawar.*

Group II.

Bulsar.	Navapur.	Mandwa.	Redi.
Maroli.	Satpadi.	Alibag.*	Kiranapani.
Bandra.	Kelwa.	Revdanda.*	Tilmati.
Vessava.	Dantivra.	Bankot.*	Chendya.
Borya.*	Arnalla.	Varavda.*	Belikeri.
Palshet.			
Sadashivgad.	Manori.	Ratnagiri.*	Gangawali.
Bingi.	Belapur.*	Purnagad.*	Tadri.*
Umbergaon.	Uttan.	Deogad.*	Manki.
Dahanu.	Nhawa.*	Achra.*	Murdeshwar.
Tarapur.	Thal.*	Malwan.*	Shirali.
		Nivti.	Bhatkal.*

§ The limits of the ports to which the Act has been extended have been defined under the Indian Ports Act, 1908, in the following notifications :—
Government Notification, Revenue Department, dated the 7th June 1886.
Government Notification, Revenue Department, No. 2392-A and 2392-B, dated the 12th April 1901.
Government Notification, Revenue Department, No. 4841 and 4841-A, dated the 21st May 1912.
Government Notification, Revenue Department, No. 8908-A, dated the 30th September 1913.
Government Notification, Revenue Department, No. 8972, dated the 18th September 1916.
Government Notification, Revenue Department, No. 11212, dated the 20th November 1916.
Government Notification, Revenue Department, No. 9545/45 (a), dated the 26th April 1949.

S. 2. **G. N., R. D., No. 9572/45 (c), dated 29th July 1949 (B. G., Pt. IV-A, p. 807).**

In exercise of the powers conferred by section 2 of the Bombay Landing and Wharfage Fees Act, 1882 (Bom. VII of 1882), read with the Janjira, Sawantwadi and Cambay States (Application of Ports and Customs Laws) Order, 1949, the Government of Bombay is pleased to extend the provisions of the said Act to the port of Kirnapani.

S. 2. **G. N., R. D., No. 9572/45(e), dated 29th July 1949 (B. G., Pt. IV-A, p. 807).**

In exercise of the powers conferred by section 2 of the Bombay Landing and Wharfage Fees Act, 1882 (Bom. VII of 1882), read with the Janjira, Sawantwadi and Cambay States (Application of Ports and Customs Laws) Order, 1949, the Government of Bombay is pleased to extend the provisions of the said Act to the following ports in the Janjira State :—

Group I.

Murud (Janjira).	Shrivardhan.

Group II.

Rajpuri.	Borlai-Mandla.
Kumbharu.	Nandgaon.

S. 2. **G. N., R. D., No. 9572/45(i), dated 29th July 1949 (B. G., Pt. IV-A, p. 808).**

In exercise of the powers conferred by section 2 of the Bombay Landing and Wharfage Fees Act, 1882 (Bom. VII of 1882), read with the Janjira, Sawantwadi and Cambay States (Application of Ports and Customs Laws) Order, 1949, the Government of Bombay is pleased to extend the provisions of the said Act to the port of "Cambay".

S. 5(c). **G. N., R. D., No. 1270-C, dated 11th January 1932 (B. G., Pt. I, p. 173).**

Amended by G. N., R. D., No. 159/28, dated 26th July 1933.
Amended by G. N., R. D., No. 1270-C, dated 31st August 1934.
Amended by G. N., R. D., No. 1270-C, dated 15th November 1934.
Amended by G. N., R. D., No. 1270-C (b), dated 9th November 1935.
Amended by G. N., R. D., No. 223/24 (e), dated 26th March 1936.
Amended by G. N., R. D., No. 1270-C, dated 5th April 1938.
Amended by G. N., R. D., No. 1270-C, dated 10th January 1940.
Amended by G. N., R. D., No. 1270-C, dated 10th November 1941.

In exercise of the powers conferred by clause (c) of section 5 of the Bombay Landing and Wharfage Fees Act, 1882 (Bom. VII of 1882), and with reference to Government Notification in the Revenue Department, No. 1013, dated the 26th January 1917, the Governor in Council is pleased to determine as shown in the Schedule annexed hereto the limits of the landing places declared by the said notification to be public landing places, to which the provisions of the said Act apply :—

SCHEDULE.

Sche

Survey No.	Name of port.	Particulars of the landing place or wharf.	Measurement in length and breadth in feet as far as possible in the absence of boundary marks.
1	Broach ..	Foreshore opposite the Custom House. Jetty and foreshore at Chhapat Bandar.	3 furlongs and 377 feet.
2	Surat ..	New Survey No. 2080 ..	4,452 square yards up to the low water mark.
		1/18 ..	24,626 square yards up to the low water mark.
		1/19 ..	3,094 square yards up to the low water mark.
		1/20 ..	7,153 square yards up to the low water mark.
		1/21 (*a*) ..	927 square yards.
3	Bulsar ..	The shore stretching over the whole of Survey No. 276.	380 feet long along the bank of the river and 22 gunthas in area.
		The shore in Survey No. 270.	400 feet along the bank of the river.
		Wharf at Bhagda ..	210 feet in length and 40 feet in breadth.
4	Maroli ..	The shore to the west of the Maroli village (open space of the Maroli creek shore, in front of the Maroli Lighthouse to the east as far as the creek channel).	500′ × 100′ ..
5	Umbergaum ..	The shore of the creek beneath the Umbergaum Custom House.	500′ × 100′ ..

dule.

Boundaries.			
North	East.	South.	West.
Bunder Road ..	Local Fund Stone Jetty	Low water mark of the Narbada river.	Becharji Ovara.
End of the Surat Castle	Wall dividing the Victoria Garden.	Ghukhad ..	Tapti river.
.....	Municipal Road leading to the river bed.	Survey No. 275 demarcated by a cactus hedge.	Survey No. 277 commencing at the Nimb tree.
.....	High level ground demarcated by cactus hedge.	A straight line running along the compound of the Custom House to the end of Survey No. 270.	Municipal road leading to the river bed.
From the wharf to the bed of the river.	Part of Survey No. 314 and part of the Local Board Road.	Survey No. 315 ..	Private wharf.
Maroli creek	Shore of the Maroli creek.	Shore of the Maroli creek.	Maroli Bundar light.
Umbergaum creek ..	The boundry mark posts of Mr. Hasanali Ibrahimji's property.	The umbergaum Bandar light post and the open space of the shore of the Umbergaum creek.	Open space of the shore of the Umbergaum creek.

Survey No.	Name of port.	Particulars of the landing place or wharf.	Measurement in length and breadth in feet as far as possible in the absence of boundary marks.
6	Dantivra ..	North-eastern portion of the foreshore (to the south of the Custom House) on the western bank of the Lingi creek.	200′ × 125′ ..
7	Kelwa ..	Shore opposite the Kelwa Custom House.	150′ × 70′ ..
9	Satpati ..	Shore to the north of the Satpati Custom House touching the compound.	50′ × 70′ ..
10	Nawapur ..	Shore beneath the Custom House.	100′ × 40′ ..
11	Tarapur ..	Shore from the western end of the Port Fund road.	210′ × 50′ ..
12	Dahanu ..	Shore to the west of the inlet behind the Sarkarkun's bungalow. (The land is at a distance of 100 feet from the bander light post at the compound of the Sarkarkun's bungalow.)	200′ × 75′ ..
13	Bassein ..	(1) Bassein masonry jetty.	340′ × 18′ ..
		(2) Bassein wharf (Portion to the east side of the municipal road).	Length (east creek side) 185′ Lengthh (west road side) 189′ Breadt113′.
		(3) Bassein wharf (Portion to the west side of the municipal road).	Length, north—150′. .. Length, south—175′. Breadth, east—83′. Breadth, west—10′.
14	Arnalla ..	(1) A plot of land and shore to the west of the Arnalla Lighthouse compound in Agashi, Survey No. 840.	125′ × 110′ ..
		(2) Shore to the north of Arnalla and Agashi, village malki Survey Nos. 542 and 754.	1,350′ × 99′ ..
		(3) Landing place at Bhati Bandar, Agashi, Survey No. 845, area 20 gunthas to the north of the Agashi village.	210′ × 100′ ..
15	Bandra ..	(1) Foreshore near the Bandra fish market.	75′ × 24′ ..
		(2) Danda—the landing place between the embankment put up for catching fish called "Katas".	150′ × 50′ ..

Boundaries.			
North.	East.	South.	West.
Lingi creeklet ..	Lingi creek ..	Government Khajan waste land.	Khajan waste land.
Concrete wall of the Custom House Compound and Christian cemetery.	Foreshore and cart track.	Creek ..	Foreshore.
Sandy waste land ..	Cart track ..	Concrete wall of the Custom House compound.	Sandy waste land.
Creek and foreshore ..	Private land owned by Narayan Babaji Bari.	Private land owned by Mathura Nana Bari.	Cart track in front of the Custom House.
Creek ..	Waste land and road.	Fort wall ..	Foreshore.
Waste sandy land.	Waste sandy land.	Dahanu creek.	Waste land.
Bassein warf .. Tomb and Custom House.	Bassein creek .. Bhag Bandar Road.	Bassein creek .. Do. ..	Bassein creek. Municipal creek.
Branch road leading from the municipal road to the fort gate.	Municipal Road.	Do. ..	Sandy breach.
Gurcharan land ..	Arnalla Light house.	Gurcharan land ..	Seashore.
Arnalla creek ..	Breach ..	Arnalla Gurcharan..	Maradi Bandar and breach.
Creek ..	Marshy land ..	Lando f Karson Kumbhar and Gokhale and road.	Creek.
Mr. Antony John Inido's house and Compound.	Seashore leading to the fish market.	Creek ..	Seashore leading to the church.
Creek ..	Shinwar Gana Koli's house and Harischandra Jav Koli's house.	Shore leading to the cremation ground.	Seashore.

Survey No.	Name of port.	Particulars of the landing place or wharf.	Measurement in length and breadth in feet as far as possible in the absence of boundary marks.
16	Vesawa ..	(1) Foreshore near the place where the ferry lands passengers.	.....
	(2 plots) ..	(2 plots)— I plot to the north of the road. II plot to the south of the road.	100′ × 40′. 100′ × 40′.
		(2) Yerangle (*** the landing place near the Custom House).	.....
17	Manori ..	(1) The foreshore to the east of the Manori Custom House at Marve.	Length from west to east 56′. Breadth at one end 34′. Breadth at the other end 20′.
18	Uttan ..	The shore opposite the Custom House.	50′ × 50′ ..
19	Thana ..	(1) Customs jetty at Chendani Bandar.	500′ × 13′ ..
		(2) Landing place at Bhendi Bandar.	209′ × 93′ ..
20	*Deleted.*		
21	Bhiwandi ..	(1) Customs wharf at Bhiwandi.	112′ × 15′ ..
		(2) Customs wharf for weighing dutiable goods.	60′ × 30′ ..
		(3) Piece of land to the east of, and close to the Bhiwandi Custom House.	40′ × 31′ ..
22	Kalyan ..	(1) Jetty and reclaimed ground in front of the Kalyan Custom House and the foreshore between the jetty and the Agra road bridge.	110′ × 90′ ..
		(2) The Salt Department plot on the Mumbra foreshore.	200′ × 50′ ..
		(3) The Salt Department plot on the Mumbra foreshore, trangular in form.	120′ × 33′ ..
24	Trombay ..	The portion of the jetty adjoining the Public Works Department road.	83′ × 13′ ..
25	Belapur ..	Jetty at Belapur ..	71′ × 8′ ..
26	Ulwa ..	Ulwa wharf ..	258′ × 200′ ..

Boundaries.			
North.	East.	South	West.
Sandy shore ..	Vesawa village	Sandy shore ..	Vesawa creek.
Marshy land and Custom House.	Creek ..	Marshy land ..	Creek.
Manori creek ..	Portion of the shore.	Open space and the road leading to Malad.	Manori creek.
Foreshore ..	Foreshore ..	Custom House and its compound and further on Jav Antone Soz's fields.	Custom house compound and further on Jav Antone Soz's fields.
Marshy land and the G. I. P. Railway Bridge.	Arm of the Thana creek.	Marshy land and the Preventive Officer's bungalow.	Main road.
M. H. High School.	Thana creek ..	Broken house owned by Mr. Ratansi Premji and the G. I. P. Railway bridge.	Village of Mahagiri.
Bhiwandi creek ..	Bhiwandi creek ..	Chawl belonging to the mosque in Tindal Mohalla.	Bhiwandi creek.
Creek ..	Government waste land forming part of the Bhiwandi creek.	Government waste land and Port Fund road.	Government waste land forming part of the Bhiwandi creek.
Do. ..	Do. do. ..	Port Fund road ..	Bhiwandi Custom House.
Agra road bridge ..	Public road ..	Kalyan jetty in front of the Custom House.	Creek.
Revenue Department plot No. 3.	Creek ..	Plot No. 132 ..	Plot No. 3.
Plot No. 1 ..	Creek ..	Plot No. 2 ..	Plot No. 3.
Public road ..	Trombay creek ..	Trombay creek ..	Khari land in Trombay village.
Survey No. 256 (marshy land).	Survey No. 256 and Belapur creek.	Survey No. 256 (marshy land).	Survey No. 255 (Government grazing land).
Belapur creek ..	Nandachi Khar	Main road leading to Panwel and survey No. 72.	Belapur creek.

Survey No.	Name of port.	Particulars of the landing place or wharf.	Measurement in length and breadth in feet as far as possible in the absence of boundary marks.
27	Panwel ..	Panwel wharf ..	296′ × 125′ ..
28	Mora ..	(*a*) The landing stone jetty and wharf at Mora (old).	Length 340′ .. .. Breath 19′ .. ..
		(*b*) New pier at Mora ..	Length 1382′ .. .. Breadth 15′ up to 1282′ from the lamp post to the pier head and 35′ for the remaining 100′ of pier head.
		(*c*) Jetty at Elephanta ..	Length 273′ .. .. Breadth 12″.
29	Karanja ..	(*a*) Pier at Rewas ..	Length 88′ .. .. Breadth 20′.
		Approach road to the pier.	Length 700′ Breath 16′—4″
		(*b*) Jetty at Karanja Jetty up to 100′ in length from the H. W. mark and the area adjoining the jetty on either side.	Length 200′ .. .. Breadth 100′.
		(*c*) Dharamtar (Pen side) new pier and Landing and Wharfage Fees Fund reclamation.	Length 60′—6″ .. Breadth 18′—3″. Length 525′. Breadth 67′.
		(*d*) Approach road with wooden two staged landing.	Length 82′ .. .. Breadth 6′.
30	Thal ..	The shore in front of the Custom House.	Length 290′ .. Breadth 42′.
31	Alibag ..	The landing place near the Custom House.	On one side of the road— Length 400′. Breadth 140′. On the other side of the road— Length 450′. Breadth 200′.

Boundaries.			
North.	East.	South.	West.
Marshy land bundh leading to Ramagar salt work and portions of survey Nos. 476, 797 and 854.	Road leading to the Panwel town.	Creek and opening of the river and portion of Survey No. 456.	Creek leading to Belapur and beyond the creek extermity of Waghar village.
Mora Creek ..	Mora Creek ..	Mora-Kegaon road and parking space.	Landing and Wharfage Fees fund shed with open parking space and portion of Mora creek
Do. ..	Do. ..	Do. ..	Do. ..
Public road below Elpehanta Hill.	Elephanta creek (Bombay-waters).	Creek (Bombay-waters).	Creek (Bombay-waters).
Karanja Creek ..	Karanja Creek and marshy land.	Marshy land and approach road to the Rewas pier.	Karanja Creek and marshy land.
Rewas Pier head ..	Marshy land ..	The Public Works Department road to Alibag.	Marshy land.
Landing and Wharfage Fees Fund Dharmashalla : Bombay Steam Navigation Company's ticket office and Karanja-Uran Local Board road.	Sea beach ...	Karanja creek ...	See beach.
Marshy land.	Approach road to the pier and motor stand.	Marshy land ...	Dharamtar creek.
Public Works Department road.	Arm of Dharamtar creek	Arm of Dharmtar creek and marshy land.	Do.
Thal creek ..	Thal creek ...	Thal Custom House.	Sea beach.
Marshy land ..	Alibag creek ...	Alibag creek ...	Sandy beach.

Survey No.	Name of port.	Particulars of the landing place or wharf.	Measurement in length and breadth in feet as far as possible in the absence of boundary marks.
32	Revdanda ..	(*a*) Portion of the sandy beach lying to the west of the creeklet leading to Agrao village.	Length 46′ .. Breadth 38′
		(*b*) The portion of the sandy beach lying to the south of the portion at (*a*) above.	Length 98′ .. Breadth 35′
33	Mandad ..	The landing place at Kalvi ..	Length 108′ .. Breadth 10′
34	Bankot ..	The shore opposite the Custom House.	Length 69′ .. Breadth 60′
36	Harnai ..	(*a*) The sea-shore opposite Custom House.	Length 225′ .. Breadth 100′
		(*b*) The landing jetty and the wharf.	Jetty— .. Length 132′ .. Breadth 16′ Wharf— Length 47′ .. Breadth 27″
37	Dabhol ..	(*a*) The landing place opposite the Custom House in three parts; one to the east.	Length 80′ .. Breadth 27′
		Second in front ..	Length 26′-6″ .. Breadth 24′-6″ exclusive of the wooden bridge which is 15′×16′
		Third to the west ..	Length 113″ .. Breadth 21′×6″
		(*b*) The new Dabhol wharf ..	Length 268′ .. Breadth 135′
38	Borya ..	The shore below the Custom House.	Length 40′ .. Breadth 32′
39	Jaigad ..	(*a*) The landing place near the Custom House.	Length 160′ .. Breadth 27′
		(*b*) The new jetty ..	Length 150″ .. Breadth 60″
40	Varoda ..	(*a*) Concrete jetty ..	Length 160′ .. Breadth 10′
		(*b*) Temporary jetty constructed of boulders.	Length 160′ .. Breadth 10′

Boundaries.			
North.	East.	South.	West.
Landing and Wharfage Fees Fund latrines.	Marshy land ..	Marshy land ..	Local Board road.
Marshy land ..	Roha creek ..	Roha creek ..	Sandy beach.
Mr. Sathe's private land.	Mr. Sathe's private land.	Mr. Sathe's private land.	Mandad creek.
Bankot creak ..	Bankot Custom House.	Local Board road.	Open space.
Harnai Custom House.	A brooklet ...	The Arabian Sea ..	Dapoli-Harnai road.
The Arabian Sea ..	The Arabian Sea ..	The Arabian Sea ..	Wharf.
Dapoli-Harnai road ..	Jetty ..	The Arabian Sea ..	Hill.
Custom House compound.	Dabhol creek ..	Dabhol creek ..	Dabhol Custom House.
Custom House ..	Landing place ..	Portion of the wooden wharf.	Approach road to the Custom House.
B. S. N. Co.'s ticket office and Mr. Bother's garden.	Gate of the compound of the Custom House.	Dabhol creek ..	Kanandikar wharf.
Compound of the Dabhol mosque.	Public Works Department road.	Dabhol creek ..	I.C.N. Tr. Co.'s ticket office and Moray's garden.
Survey No. 210 ..	Arabian Sea ..	Seashore ..	Borya Custom House.
Land in Survey No. 5.	Jaigad creek ..	Gaothan land in Survey No. 97.	Land in Survey Nos. 63 and 5.
Jaigad creek ..	Jaigad creek ..	Jaigad creek ..	Mahomedan cemetery in Survey No. 104.
Landing and Wharfage Fees fund approach road to the bandar.	Temporary boulder jetty and sea-shore.	The sea ..	Cart stand and sea shore.
Do. ..	Seashore ..	Do. ..	New concrete jetty.

Survey No.	Name of port.	Particulars of the landing place or wharf.	Measurement in length and breadth in feet as far as possible in the absence of boundary marks.
41	Ratnagiri ..	The new Ratnagiri jetty and sea beach on both sides of it.	(*a*) Jetty— Length 930′ Breadth 14′ ..
			(*b*) Sea beach to the west of the jetty— Length 260′ Breadth 190″ ..
			(*c*) Sea beach to the east of the jetty— Length 100″ Breadth 70″ ..
		The beach west of the Custom House.	(*d*) Length 400″ Breadth 70″ ..
		The north-east shore of Mirya at the mouth of the Kalbadevi creek.	Length 300′ Breadth 11′ ..
		Rajivda creek foreshore.	Length 250′ Breadth 60′ ..
42	Purnagad ..	The beach below the Custom House.	Length 360′ Breadth 60′ ..
43	Jaitapur ..	(*a*) Wharf opposite the Custom House.	Length 111′ Breadth 63′ ..
		(*b*) Latrite stone jetty ..	Length 77′ .. Breadth 17″—3″
44	Vijaydurg ..	(*a*) Landing place near the Custom House.	130′×60′ ..
		(*b*) Land in Survey No. 125, Falni No. 4.	300′×60′ ..
		(*c*) Land between the outer and the main walls of the Fort Survey No. 151, Falni No. 1.	275′×25′ ..
45	Devgad ..	Foreshore opposite the old Custom House beyond the public road.	50′×18′ ..
46	Achra ..	The shore opposite the Landing and Wharfage Fund Dharmashalla.	Length 250′ Breadth 75′ on the West 30′ on the East.
47	Malwan ..	(*a*) Built up place adjoining the Custom House verandha.	63′×15½′ ..
		(*b*) Jetty and sea beach on both sides of it to a distance of 150″.	

Boundaries.			
North.	East.	South.	West.
P. W. D. Road. ..	Sandy beach ..	Arabian sea ..	Sandy beach.
Do. ..	Jetty ..	Sandy beach ..	Do.
Sandy beach and a building of the American mission.	Sandy beach ..	Do. ..	Jetty.
Private land in Survey Nos. 32 and 34.	Land owned by Mr. Surve.	Arabian Sea ..	Sandy beach and rain water drain.
The Kalbadevi bay ..	Culvert No. 76 on the Ratnagiri-Mirya Road.	Ratnagiri-Mirya Road.	Portion of the bay.
Private land in Survey No. 28.	Government waste land.	Rajivda creek ..	Approach road to Rajivda ferry.
Land in Survey No. 26.	The bank of the Purnagad creek.	The bank of the Purnagad creek.	Land in Survey No. 27.
Creek ..	Peon's quarters ..	Custom house ..	Creek.
Do. ..	Creek and private land in survey No. 70 pot hissa No. 9 owned by Dhondu *alias* Abdul Karim wd. Abdul Kadar Kaji and others.	Landing and Wharfage Fees Fund road and private land in survey No. 70, pot hissa No. 9 owned by Dhondu *alias* Abdul Karim wd. Abdul Kadir Kaji and others.	Private land in survey No. 78, pot hissa No. 3, owned by Vishnu Ghanshyam Narkar.
Creek ..	Creek ..	Darga of Muhammadans.	Public road.
Vacant land ..	Creek ..	Laxman Ganoji's land.	Public road.
Government Waste land.	Creek ..	B. S. N. Co.'s office ..	Government waste land.
Creek ..	Creek ..	Pipal tree katta ..	Godown of one Bhiku Anna Parkar.
Foira creek ..	Foreshore land with Pirwadi creek to its East.	Bombay Steam Navigation Company's Ticket Office and the Landing and Wharfage Fund Dharmashalla.	Foreshore land with the Arabian sea to its West.
Custom house ..	Compound wall ..	Compound wall ..	Compound wall.
Custom House and compound wall of private land.	Shore ..	Sea ..	Old Dharmashalla and Shore.

Survey No.	Name of port.	Particulars of the landing place or wharf.	Measurement in length and breadth in feet as far as possible in the absence of boundary marks.
48	Niwti ..	(a) The landing place adjoining the Custom House.	100′×20′ ..
		(b) Shore close to the F. C. Yard, Kochra.	200′×30′ ..
49	Vengurla ...	(a) Wharf near the new Custom House (Head Bandar).	....
		(b) Wharf near the old Custom House.	....
50	Redi ..	Landing place near the Sarkarkun's office on the bank of the Narayan Prasad Salt work.	137′×177′ ..
51	Tilmati	Shore to the west of Custom House.	600′×100′ ..
52	Sadashivgad ..	(a) Screw pile pier at Kodibag	32′×20′
		(b) Beach below the Custom House.	210′×10′ ..
53	Karwar ..	Screw pile pier and the wharf to the west of the public road extending from the pier to a line right opposite the Custom House.	950′×60′ ..
54	Bingi ..	Beach below the Custom House and Bingi village.	Land forming Bingi survey No. 392 measuring 2 acres and 4 gunthas.
55	Chendia ..	(a) Beach below the Custom House.	430′ × 80′ ..
		(b) Beach to the west of the Custom House at the mouth of the Chendia creek in Survey No. 235-B.	40′ × 30′ ..
56	Belekeri ..	(a) Wharf in front of the Custom House.	100′ × 10′ ..
		(b) Beach below the Kodar Custom House.	80′ × 25′ ..
57	Ankola ..	Built up wharf near the old Custom House.	104′ × 94′ ..
58	Gangavli ..	(a) Built up wharf in front of the old Custom House.	60′ × 32′ ..
		(b) Strip to the east of the new Custom House from the Northern compound wall of the fish curing yard.	290′ × 170′ ..

	Boundaries.		
North.	East.	South.	West.
Custom House ..	Private land ..	Creek ..	Government well.
Kochra creek ..	F. C. Yard Kochra.	Seashore ..	Kochra creek
Road leading to town.	Sea ..	Sea and break-water ..	Hill and Custom House.
Creek and poons' line.	Garden and road leading to town.	Creek ..	Creek.
Sea beach ..	Custom House and quarters and Fish Oil Factory.	Sea beach ..	Sea.
Creek ..	Creek ..	Road leading to the pier.	Creek.
Creek ..	Road leading to the pire.	Custom House and Establishment quarters.	Land in Survey No 283.
Sea ..	Karwar-Ankola road.	Baitkol cemetery road.	Baitkol cove.
Bingi survey Nos. 115, 341 and 118.	Bingi Survey No. 113 sea beach.	Sea ..	Bingi survey No. 336.
F. C. Yard compound and Custom House.	Allavial land ..	..	Allavial land.
Land in Survey No. 235.	Land in Survey No. 235.	Land in Survey No. 235.	Creek.
Creek ..	Creek ..	Local Board road. ..	Creek.
Land in Survey No. 71.	Kodar bay ..	Land in Survey No. 73 .	Land in Survey Nos. 72 and 73.
Creek ..	Private garden ..	Public road ..	Creek.
Creek ..	Open space ..	Old Custom House ..	Road.
Creek ..	Creek ..	F. C. Yard compound ..	Custom House and open space.

Survey No.	Name of port.	Particulars of the landing place or wharf.	Measurement in length and breadth in feet as far as possible in the absence of boundary marks.
59	Tadri ..	(*a*) Built up wharf in front of the Custom House.	154′ × 20′ ..
		(*b*) Beach in front of the Custom House on either side of the wharf.	160′ × 65′ ..
60	Kumta ..	Enclosed wharf in front of the Custom House.	231′ × 108′ ..
61	Honawar ..	(*a*) Enclosed wharf in front of the Custom House.	....
		(*b*) Land in Honavar Survey No. 164-A in charge of the Salt Department.	....
62	Manki ..	Shore below the Custom House.	150′ × 50′ ..
63	Murdeshwar ..	Shore to the west of the Custom House.	300′ × 75′ ..
64	Shirali ..	(*a*) L. & W. F. Wharf on the Shirali side of the Venktapur ferry.	....
		(*b*) Yard of the Custom House immediately in front of it.	60′ × 20′ ..
65	Bhatkal ..	(*a*) Built up wharf in front of the Custom House.	78′ × 46′ ..
		(*b*) Shore to the west of the Custom House.	150′ × 50′ ..

Boundaries.			
North.	East.	South.	West.
Open space ..	Creek ..	Open space ..	Public road.
Custom House ...	Kumta-Honawar road.	Creek ..	Waste marshy land.
Compound wall ..	Compound wall ..	Creek ..	Compound wall.
Public road ..	Survey No. 165-A2 ..	Creek ..	P. W. D. Landing stage.
Hillock on which the Custom House-stands.	Road leading to Custom House.	Open space ..	Open space.
Mavli Survey No. 3 and district Bungalow.	Mavli Survey No. 6 ..	Sea beach ..	Sea.
Ferry rest house ..	P. W. D. open land and road.	Creek ..	Compound wall of Shirali Survey No. 588-A.
Custom House ..	Shirali Survey No. 32	Creek	Establishment quarters.
			Sea
Creek ..	Stone wall and private garden	Custom House	Sea shore.
Creek ..	Custom House	Sea	Light house hill.

Ss. 5 and 6

G. N., R. D., No. 159/28, dated 26th July 1933 (B. G., Pt. I, p. 1765).

In exercise of the powers conferred by sections 5 and 6 of the Bombay Landing and Wharfage Fees Act, 1882 (Bom. VII of 1882), the Governor in Council is pleased—

(1) to withdraw the said Act from the Port of Mahul ; and

(2) to direct that the entries relating to the said Port of Mahul shall be deleted from Government Notifications in the Revenue Department, No. 1013, dated the 26th January 1917, No. 1892-A, dated the 26th July 1921 and No. 1270-C, dated the 11th January 1932.

S. 5 (d)

G. N., R. D., No. 1270-C, dated 5th February 1931 (B. G., Pt. I, p. 396).

In exercise of the powers conferred by clause (*d*) of section 5 of the Bombay Landing and Wharfage Fees Act, 1882 (Bom. VII of 1882), and in modification of Government Notification in the Revenue Department No. 1892-A, dated the 26th July 1921, the Governor in Council is pleased to withdraw the said Act from the port of Kiranapani mentioned in Group II in the said notification.

S. 5 (d)

G. N., R. D., No. 1270-C, dated 9th November 1935 (B. G., Pt. I, p. 2116).

In exercise of the powers conferred by clause (*d*) of section 5 of the Bombay Landing and Wharfage Fees Act, 1882 (Bom. VII of 1882), the Governor in Council is pleased to withdraw the said Act from the ports of Kelshi and Mahim.

S. 5 (d)

G. N., R. D., No. 223/24(c), dated 26th March 1936 (B. G., Pt. I, p. 546).

In exercise of the powers conferred by clause (*d*) of section 5 of the Bombay Landing and Wharfage Fees Act, 1882 (Bom. VII of 1882), the Governor in Council is pleased to withdraw the said Act from port of Bhendi Bandar and to cancel Government Notification, Revenue Department, No. 223/24 of 18th November 1925, with effect from 1st April 1936.

S. 6

G. N., R. D., No. 8265/28(a), dated 23rd April 1937 (B. G., Pt. I, p. 1045).

Amended by G. N., R. D., No. 8265/28, dated 19th May 1937.

In exercise of the powers conferred by section 6 of the Bombay Landing and Wharfage Fees Act, 1882 (Bom. VII of 1882), and in supersession of Government Notification in the Revenue Department, No. 8265/28(*a*), dated the 28th November 1936, the Government of Bombay is pleased to confer, with effect from the 28th day of April 1937, on the Collector of Salt Revenue, Bombay, within the limits of his jurisdiction the powers conferred and the duties imposed on the Chief Customs Authority under sections 9 and 11 of said Act.

Boundaries.			
North.	East.	South.	West.
Open space ..	Creek ..	Open space ..	Public road.
Custom House ...	Kumta-Honawar road.	Creek ..	Waste marshy land.
Compound wall ..	Compound wall ..	Creek ..	Compound wall.
Public road ..	Survey No. 165-A2 ..	Creek ..	P. W. D. Landing stage.
Hillock on which the Custom House-stands.	Road leading to Custom House.	Open space ..	Open space.
Mavli Survey No. 3 and district Bungalow.	Mavli Survey No. 6 ..	Sea beach ..	Sea.
Ferry rest house ..	P. W. D. open land and road.	Creek ..	Compound wall of Shirali Survey No. 588-A.
Custom House ..	Shirali Survey No. 32	Creek	Establishment quarters.
			Sea
Creek ..	Stone wall and private garden	Custom House	Sea shore.
Creek ..	Custom House	Sea	Light house hill.

Ss. 5 and 6

G. N., R. D., No. 159/28, dated 26th July 1933 (B. G., Pt. I, p. 1765).

In exercise of the powers conferred by sections 5 and 6 of the Bombay Landing and Wharfage Fees Act, 1882 (Bom. VII of 1882), the Governor in Council is pleased—

(1) to withdraw the said Act from the Port of Mahul ; and

(2) to direct that the entries relating to the said Port of Mahul shall be deleted from Government Notifications in the Revenue Department, No. 1013, dated the 26th January 1917, No. 1892-A, dated the 26th July 1921 and No. 1270-C, dated the 11th January 1932.

S. 5 (d)

G. N., R. D., No. 1270-C, dated 5th February 1931 (B. G., Pt. I, p. 396).

In exercise of the powers conferred by clause (*d*) of section 5 of the Bombay Landing and Wharfage Fees Act, 1882 (Bom. VII of 1882), and in modification of Government Notification in the Revenue Department No. 1892-A, dated the 26th July 1921, the Governor in Council is pleased to withdraw the said Act from the port of Kiranapani mentioned in Group II in the said notification.

S. 5 (d)

G. N., R. D., No. 1270-C, dated 9th November 1935 (B. G., Pt. I, p. 2116).

In exercise of the powers conferred by clause (*d*) of section 5 of the Bombay Landing and Wharfage Fees Act, 1882 (Bom. VII of 1882), the Governor in Council is pleased to withdraw the said Act from the ports of Kelshi and Mahim.

S. 5 (d)

G. N., R. D., No. 223/24(c), dated 26th March 1936 (B. G., Pt. I, p. 546).

In exercise of the powers conferred by clause (*d*) of section 5 of the Bombay Landing and Wharfage Fees Act, 1882 (Bom. VII of 1882), the Governor in Council is pleased to withdraw the said Act from port of Bhendi Bandar and to cancel Government Notification, Revenue Department, No. 223/24 of 18th November 1925, with effect from 1st April 1936.

S. 6

G. N., R. D., No. 8265/28(a), dated 23rd April 1937 (B. G., Pt. I, p. 1045).

Amended by G. N., R. D., No. 8265/28, dated 19th May 1937.

In exercise of the powers conferred by section 6 of the Bombay Landing and Wharfage Fees Act, 1882 (Bom. VII of 1882), and in supersession of Government Notification in the Revenue Department, No. 8265/28(*a*), dated the 28th November 1936, the Government of Bombay is pleased to confer, with effect from the 28th day of April 1937, on the Collector of Salt Revenue, Bombay, within the limits of his jurisdiction the powers conferred and the duties imposed on the Chief Customs Authority under sections 9 and 11 of said Act.

THE BOMBAY HIGHWAY ACT, 1883 (BOM. I OF 1883).

G. N., P. W. D., No. 20, dated 24th April 1883 (B. G., Pt. I, p. 318). **S. 2.**

His Excellency the Right Honourable the Governor in Council hereby notifies, under section 2 of Bombay Act No. I of 1883, the "Bombay Highway Act, 1883," that the said Act shall apply to the local areas specified below, that is to say :—

I. To the City of Poona and the Cantonments and Stations of Poona and Kirkee.
II. To the City, Cantonment, and Station of Ahmedabad.
III. To the Town, Cantonment, and Station of Belgaum.
IV. To the Town, Cantonment, and Station of Malegaon.
V. To the Town and Station of Karwar.

G. N., P. W. D., No. 37, dated 1st October 1883 (B. G., Pt. I, p. 737). **S. 2.**

Amended by G. N., P. W. D, No. 5, dated 19th January 1884.

His Excellency the Right Honourable the Governor in Council hereby notifies, under section 2 of Bombay Act No. I of 1883, the "Bombay Highway Act, 1883," that the said Act shall apply to the villages specified in the margin in the vicinity of Poona and Kirkee and all lands comprised within the revenue survey maps of Poona and Kirkee, as well as to the City of Poona and the Cantonments and Stations of Poona and Kirkee already notified.

Yerrowda.	Yerandowna.
New Kirkee.	Kothrud.
Mali Munjeri.	Pashan.
Mundhwa.	Banere.
Ghorpadi.	Bawdhan Budruk and Bawdhan Khurd.
Wanowri.	Bhosri.
Kondve Khurd.	Bapudi.
Bhamburda.	Bhopkhel.
Parvati.	Wadgaon Budruk.
Dhankowdi.	Dhairi.
Kondve Budruk.	Hingne Budruk and Hingne Khurd.
Dhawde.	Aundh.
Katraj.	Kharadi.

G. N., P. W. D., No. 85, dated 16th October 1895 (B. G., Pt. I, p. 1047). **S. 2.**

His Excellency the Right Honourable the Governor in Council hereby notifies under section 2 of Bombay Act I of 1883, "Bombay Highway Act, 1883," that the villages and lands specified in the margin in the Haveli Taluka of the Poona District shall be excluded from the local area previously notified as being amenable to the assessment under the said Act.

1. Dhayri,
2. Wadgaon Budruk,
3. Hingne Khurd,
4. Sangwi,
5. Dapuri,
6. Pimple Gurao,
7. Bhosri,
8. Bopkhel,
9. Hadapsar,
10. Fursungi,
11. Umli Dewach,

and

all lands of Katraj village lying to the south of Survey Nos. 115, 114, 111, 92, 95, 70, 69, 63, 64, 50, 49 and 52 comprised within the Revenue Survey map of that village.

S. 2. **G. N., P. W. D., No. 19, dated 18th May 1904.**

In modification of Government Notification No. 85, dated 16th October 1895, printed at page 1047, Part I, of the *Bombay Government Gazette*, dated 17th idem, His Excellency the Right Honourable the Governor in Council hereby notifies, under section 2 of Bombay Act I of 1883, the " Bombay Highway Act, 1883, " that the said Act shall apply to the village of Dapudi in taluka Haveli of the Poona District with effect from the 1st of April 1904.

S. 2. **G. N., P. W. D., No. 51, dated 21st December 1883 (B. G., Pt. I, p. 1024).**

Amended by G. N., P. W. D., No. 61, dated 10th November 1885.

In exercise of the power conferred by section 2 of the Bombay Highway Act, 1883, and with reference to the Notification No. 20, published at page 318 of the *Bombay Government Gazette* of the 26th April 1883, the Governor in Council is pleased to direct that the said Act shall apply to the Municipal District and to the area bounded as follows (namely) :—

On the south by the Municipal district of Ahmedabad ;
On the west and north-west by the river Sabarmati ;
On the north-east by the Cantonment of Ahmedabad ;
On the east by the road leading from the Camp to the Railway Station of Ahmedabad.

G. N., P. W. D., No. 50, dated 19th December 1883 (B. G., Pt. I, p. 1002).

With reference to Government Notificaton No. 37, published at page 737 of the *Bombay Government Gazette* of the 4th October 1883, extending the Bombay Highway Act, 1883, to certain villages in the vicinity of Poona and Kirkee and to all lands comprised within the Revenue Survey Maps of Poona and Kirkee as well as to the City of Poona and the Cantonments and Stations of Poona and Kirkee, it is hereby notified for general information that a tax will be levied on and after the 1st January 1884, from all persons resident within the local area so notified owning or having charge of any such vehicle, horse or pony as is hereinafter described at the following rates (namely) :—

1.	For Every four-wheeled vehicle on springs ...	Rs. 5 per quarter.
2.	For every two-wheeled vehicle on springs ...	Rs. 3 per quarter.
3.	For every cart or hackery drawn by bullocks.	Re. 1-2-0 per quarter.
4.	For every horse, or pony of the height of 12 hands or upwards.	Rs. 2-8-0 per quarter.

Provided that the above tax shall not be levied within the limits of the Municipality of Poona so long as a Municipal tax on vehicles and animals is levied therein.

G. N., P. W. D., No. 52, dated 21st December 1883 (B. G., Pt. I, p. 1024).

Amended by G. N., P. W. D., No. 61, dated 10th November 1885.

With reference to Government Notification No. 51, dated 21st December 1883, published above, extending the Bombay Highway Act, 1883, to the Municipal District and to Station of Ahmedabad, it is hereby notified for general information

that a tax will be levied on and after the 1st January 1884 from all persons resident within the local area so notified owning or having charge of any such vehicle, horse or pony as is hereinafter described at the following rates (namely) :—

1. For every four-wheeled vehicle on springs—Rs. 5 per quarter.
2. For every two-wheeled vehicle on springs—Rs. 3 per quarter.
3. For every cart or hackery drawn by bullocks—Rs. 1–2–0 per quarter.
4. For every horse or pony of the height of 12 hands or upwards—Rs. 2–8–0 per quarter.

Provided that the above tax shall not be levied within the limits of the Municipality of Ahmedabad so long as a Municipal tax on vehicles and animals is levied therein.

G. N., P. W. D., No. 2, dated 4th January 1884. S. 4.

Amended by G. N., P. W. D., No. 32, dated 13th June 1884.

Amended by G. N., P. W. D., No. 65, dated 10th September 1887.

In exercise of the power conferred by section 4 of the Bombay Highway Act, 1883, the Governor in Council is pleased to make the following Rules for the assessment and recovery of the tax from time to time leviable under the said Act in any local area notified under section 2 thereof (namely) :—

Preliminary.

"Collector" defined.

1. In these Rules the word "Collector" means, in a Military Cantonment, the Cantonment Magistrate, and elsewhere the Collector of the district, or such other officer as he empowers to carry out these Rules.

Assessment.

Assessment book to be kept.

2. The Collector shall cause to be prepared once a year, in a book to be provided by him for this purpose, a list of the persons liable to the said tax, showing in distinct columns :

(*a*) the names and residences of such persons ;
(*b*) the description of vehicles or animals in respect of which they are respectively liable to the tax ;
(*c*) the amount of tax for which each such person is assessed for each quarter of the year ; and
(*d*) the amount of the said tax, if any, remitted in each quarter under clause (*b*) or (*c*) of section 3 of the Act.

The said book shall be kept at the office of the Collector and shall be open to the inspection of any respectable resident of the local area within which the tax is leviable.

Returns to be required by the Collector from persons supposed to be liable to the tax.

3. To enable the Collector to have such list prepared, he shall send to every person, supposed to be liable to the payment of the tax, a schedule which he shall desire him to fill up with such information respecting the vehicles and animals owned by such person, or in his charge, as the Collector thinks necessary for the assessment of the tax, and to return it, under his signature or mark, within one week from the receipt thereof.

Every person to whom any such schedule is sent shall be bound to fill up and return the same as so required, whether he be liable to be assessed with the tax or not.

Persons liable to be assessed.

3-A. The person who keeps any vehicle or animal for use, whether he be the owner thereof or a person who hires it or has the loan of it, or has charge of it in any other capacity, shall be deemed to be the person liable to be assessed with the tax.

If one and the same vehicle or animal be so kept for use in any quarter by two or more different persons, each person who so keeps the vehicle or animal for more than fifteen days shall be assessed with the tax according to the provisions of the Act ; provided that,

(*a*) if a vehicle or animal is kept for use by several different persons, other than the owner thereof, consecutively in one quarter, all or some of whom are not liable to the tax, owing to their not keeping the vehicle or animal for more than fifteen days each, the owner of the said vehicle or animal shall, if resident within the local area in which the tax is leviable, be assessed with the quarter's tax or with the portion of the quarter's tax not recoverable from any of the said persons, as the case may be ;

(*b*) the aggregate of the sums recovered from any two or more persons for any one quarter in respect of any one vehicle or animal shall not exceed the full amount of the tax leviable for that quarter in respect of such vehicle or animal.

Notice to be given to the Collector by persons who become newly possessed of vehicles or animals liable to the tax.

4. Every person who becomes possessed of any vehicle or animal, in respect of which he will be liable for the first time to the tax aforesaid, shall be bound within fifteen days of his becoming possessed of the same, to give notice thereof in writing to the Collector.

Claims to total or partial exemption to be notified.

5. Every person, who claims under clause (*b*) or (*c*) of section 3 of the Act to be exempt from two-thirds or from the whole of the said tax in respect of any vehicle or animal owned by him or in his charge during any quarter, shall forward by post to the Collector, or leave at his office, not later than the last day of such quarter, a notice in writing, under his signature or mark, setting forth the facts on which such claim is based.

The Collector may inspect stables, etc., and

6. The Collector, or any person authorised by him in this behalf, may :—

(*a*) at any time between 5 a.m. and 7 p.m. enter and inspect any stable or coach-house or any place in which he may have reason to believe there is any vehicle or animal in respect whereof the aforesaid tax is leviable ;

Summon persons to give information.

(*b*) summon any person whom he has reason to believe to be liable to the said tax, or any servant of such person, and to examine such person or servant as to the liability of such person to the tax, and as to the number and description of the vehicles or animals, if any, in respect of which such person is so liable.

Collection.

Tax for what quarters and when leviable.

7. The said tax shall be payable for each of the following four quarters of every year, *viz.* :—

(1) 1st January to 31st March ;
(2) 1st April to 30th June ;
(3) 1st July to 30th September ;
(4) 1st October to 31st December.

It shall ordinarily be payable in arrear on the first day of the quarter next following that for which it is due ; but in the case of a person who ceases to be a resident of the local area in which the tax is leviable at any time during the currency of a quarter, it shall be payable one week before such person's departure from the said area.

Bills to be presented.

8. When any tax shall have become due, the Collector shall with the least practicable delay, cause to be presented to the person liable to the payment thereof a bill for the sum due. The bill shall specify the quarter or portion of the quarter, and the vehicles or animals in respect of which the tax is charged and the name of the person from whom it is claimed, and shall contain a notice that the amount of the bill must be paid into the Collectors office within fifteen days from the date of the presentation of the said bill.

Hearing of complaints.

9. Complaints against the assessment of any tax under these rules or the amount thereof may be made to the Collector by application in writing forwarded by post or left at his office, at any time within seven days from the date of the presentation of the bill for such tax, and upon hearing such complaints the Collector may make such amendments, if any, in the book kept under Rule 2 and in the bill as he shall think proper, and if he thinks that the complainant is not liable to the tax, he shall cancel the bill.

Notice of demand.

10. If any bill, which is not cancelled under the last preceding Rule, is not paid by the person from whom payment is claimed, or on his behalf, within fifteen days from the presentation thereof, the Collector may cause to be served upon the defaulter a notice of demand in Form A hereto annexed, or to the like effect, and if he does not within fifteen days from the service of such notice of demand pay the sum due, or show sufficient cause for non-payment of the same, to the satisfaction of the Collector, and if no appeal shall have been preferred and the amount of the tax deposited as hereinafter provided, such sum, with all costs, may be levied by order of the Collector under a warrant in Form B, hereto annexed, by distress and sale of the goods and chattels of the defaulter.

For every notice of demand under this section which the Collector shall cause to be served upon any person, a fee not exceeding one rupee, the amount of which shall be in each case fixed by the Collector, shall be paid by each person. Such fee shall be added to the amount of the tax in respect of which the notice is given, and, if not duly paid, shall be levied as costs in the same manner as such tax may be levied.

Goods of defaulter wherever found may be distrained.

11. The goods and chattels of any person from whom any tax is due may be distrained, wherever the same may be found, for default in the payment of the money due from such person.

Inventory, Notice of Distress.

12. The officer charged with the execution of a warrant of distress shall make an inventory of the goods and chattels seized under any such warrant, and shall at the same time give a notice in writing, in Form C, hereto annexed to the person in possession thereof at the time of the seizure, that the said goods and chattels will be sold as therein mentioned.

13. If the warrant is not in the meantime discharged or suspended by the Collector, the goods and chattels seized shall be sold under the orders of the Collector, who shall apply the proceeds, or such part thereof as may be necessary, in discharge of the tax and of the costs payable by the defaulter, and the surplus, if any, shall be returned on demand to the person in possession of the goods and chattels at the time of the seizure.

Sale.

Fees shall be payable upon distraints under these rules at the rates set forth in Table D hereto annexed, and shall be recoverable from the defaulter as costs in addition to the amount of the tax.

Fees.

14. Instead of proceeding by distress and sale, or, in case of failure to realize by distress the whole or any part of the sum due by a defaulter, the Collector may sue the defaulter in any Court of competent jurisdiction.

Collector may sue instead or on failure of distress.

Appeals.

15. Appeals against any tax assessed and claimed under the foregoing provisions shall be heard and determined, in Military Cantonments by the Cantonment Committee, and elsewhere by the Commissioner of the Division, or by such other officer as the State Government from time to time direct. But no such appeal shall be heard unless—

When and to whom appeals may be made.

(*a*) the amount of the tax has first of all been deposited with the Collector; and

(*b*) a complaint has been previously made under Rule 9 to the Collector, and such complaint has been disposed of by the Collector; and

(*c*) the appeal is brought within fifteen days from the date of the presentation of the bill for the tax complained of, or, if a complaint has been made against it under Rule 9, within fifteen days, from the date of the Collector's order disposing of such complaint.

If the appellate authority decreases or remits the amount of the tax, the Collector shall grant to the appellant a refund accordingly.

16. It shall be lawful for the Collector to direct that any balances of tax which have remained due for more than one year may be written off if, after the requisite enquiry, he is satisfied that they are irrecoverable.

FORM A (*see* RULE 10).

NOTICE OF DEMAND.

To

of

Take notice that the Collector demands from you the sum of due from you on account of the tax leviable under the Bombay Highway Act, 1883, for the quarter ending on the 19 , as per Bill No. dated already presented to you; and that, if the sum due is not paid into the said Collector's office at , or if sufficient cause for the non-payment of the sum is not shown to the Collector, within fifteen days from the service of this notice, a warrant of distress will be issued for the recovery of the same with costs.

Date.

(Signature of the Collector).

FORM B (*see* RULE 10).

DISTRESS WARRANT.

To

(Here insert the name of the officer charged with the execution of the warrant.)

Whereas of has not paid, or shown sufficient cause for the non-payment of, the sum of rupees due for the tax leviable under the Bombay Highway Act, 1883, for the quarter ending on the 19 , although the said sum has been only demanded in writing from the said and fifteen days have elapsed since the service of the notice of demand; this is to command you to distrain the goods and chattels of the said to the amount of the said sum of rupees and such further sum as may be sufficient to defray the charges of taking, keeping and selling such distress; and if within five days next after such distress, the said sum shall not be paid together with such further sum as may be sufficient to defray the charges of taking and keeping such distress, to sell the said goods and chattels; and having paid and deducted out of the proceeds of the sale the said sum of rupees, and the charges of taking, keeping and selling such distress to return the surplus, if any, on demand to the person whom you shall find in possession of the said goods and chattels. If sufficient distress cannot be found of the goods and chattels of the said you are to certify the same to me, together with this warrant.

Dated

(Signature of the Collector.)

Seal.

FORM C (*see* RULE 12).

FORM OF INVENTORY AND NOTICE.

(Here state particulars of goods seized.)

To

of

Take notice that I have this day seized the goods and chattels specified in the above inventory for the sum of rupees due by on account of the tax leviable under the Bombay Highway Act, 1883, for the quarter ending on the 19 ; and that unless you pay into the office of the Collector the amount due, together with the cost of this distress, within five days from the date of this notice, the goods and chattels will be sold.

Date.

(Signature of the Officer executing the Warrant of Distress.)

TABLE D (*see* RULE 13.)

TABLE OF FEES PAYABLE IN DISTRAINTS UNDER THESE RULES.

Sum distrained for—

	Fee. Rs.	a.	p.
Under Rs. 5	0	4	0
Not less than Rs. 5 and under Rs. 10	0	8	0
Do. ,, 10 do. ,, 15	0	12	0
Do. ,, 15 do. ,, 20	1	0	0
Do. ,, 20 do. ,, 25	1	4	0
Do. ,, 25 do. ,, 30	1	8	0
Do. ,, 30 do. ,, 35	1	12	0
Do. ,, 35 do. ,, 40	2	0	0
Do. ,, 40 do. ,, 45	2	4	0
Do. ,, 45 do. ,, 50	2	8	0
Do. ,, 50 do. ,, 60	3	0	0
Do. ,, 60 do. ,, 80	3	12	0
Do. ,, 80 do. ,, 100	4	8	0
Above Rs. 100	5	0	0

The above charge includes all expenses, except when peons are kept in charge of property distrained, in which case four annas must be paid daily for each man.

S. 8.

G. N., P. W. D., No 26, dated 21st May 1884.

In exercise of the power conferred by section 8 of the Bombay Highway Act, 1883, the Governor in Council is pleased to exempt every person owning or having charge of a carriage, licensed under Act XVI of 1861 to be used as a stage carriage, from the tax imposable on such carriage under section 3 of the first-named Act, provided that, during any quarter for which exemption is claimed, the carriage is not used in any local area in which the said Bomby Highway Act is in force for any purpose other than the conveyance of passengers for hire over distances exceeding twenty miles.

S. 8.

G. N., P. W. D., No 36, dated 4th August 1884.

In exercise of the power conferred by section 8 of the Bombay Highway Act, 1883, the Governor in Council is pleased to exempt every person owning or having charge of a cart used in the employ of the Poona Cantonment Committee for the removal of night-soil and rubbish, or for watering roads, from the tax imposable on such cart under section 3 of the said Act.

THE BOMBAY PUBLIC AUTHORITIES SEALS ACT, 1883 (BOM. V OF 1883).

G. N., J. D., No. 2270, dated 8th April 1886 (B. G., Pt. I). **S. 3.**

In exercise of the power conferred by section 3 of the Bombay Public Authorities Seals Act, 1883, the Governor in Council is pleased to direct that Benches of Magistrates constituted under section 15 of the Code of Criminal Procedure, 1882, shall, respectively, have and use the same seals which are prescribed for Magistrates of the Classes to which such Benches are under the provisions of the said section of the said Code to be deemed to belong.

G. N., H. D., No. 6781/5, dated 2nd February 1949 (B. G., Pt. I, p. 627). **S. 3.**

In exercise of the powers conferred by section 3 of the Bombay Public Authorities Seals Act, 1883 (Bom. V of 1883), the Government of Bombay is hereby pleased to direct that Honorary Magistrates, while attesting, authenticating or verifying any document, whether executed before them or not, shall have and use seals of the following descriptions :—

I. *Presidency Magistrates, Greater Bombay.*

Two inches in diameter—*Device* "Asoka Capital Motif"—*English inscription*—Presidency Magistrate, Greater Bombay.

II. *Magistrate of the First Class.*

Two inches in diameter—*Device* "Asoka Capital Motif"—*English inscription*—Magistrate of the First Class ( ). Vernacular inscription—First Class Magistrate ( ).

III. *Magistrate of the Second and Third Class.*

One and a half inch in diameter—*Device* "Asoka Capital Motif"—*English inscription*—Magistrate of the Class ( ). Vernacular inscription*.
*Class Magistrate ( ).

**Note.*—The blank to be filled up in writing with the word second or third according to the Magistrate using the seal is a Second or Third Class Magistrate.

G. N., H. D., No. 8081/5, dated 19th January 1950 (B. G., Pt. IV-B, p. 163). **S. 3.**

In exercise of the powers conferred by section 3 of the Bombay Public Authorities Seals Act, 1883 (Bom. V of 1883), and in supersession of Government Notification in the Judicial Department, dated the 9th July 1873, and Government Notification in the Judicial Department, No. 8814, dated the 16th December 1884, the Government of Bombay is pleased to direct that each of the public authorities specified

in column 1 of the Schedule appended hereto shall have and use the official seals respectively described against it in column 2 of the said Schedule.

Schedule.

Public authority. 1	Description of the official seal. 2
(1) Sessions Judges ..	A circular seal two inches in diameter bearing thereon the Asoka Capital Motif with the words "Satyameva Jayate" in Devnagari script inscribed below it, and the words "Court of Session....." in English and in the principal regional language of the Sessions Court.
(2) Joint Sessions Judges ..	Do. do.
(3) Additional Sessions Judges ..	Do. do.
(4) Assistant Sessions Judges ..	Do. do.
(5) Presidency Magistrates ..	A circular seal two inches in diameter bearing thereon the Asoka Capital Motif with the words "Satyameva Jayate" in Devnagari script inscribed below it, and the words "Presidency Magistrate, Greater Bombay" in English.
(6) District Magistrates ..	A circular seal two inches in diameter bearing thereon the Asoka Capital Motif with the words "Satyameva Jayate" in Devnagari script inscribed below it, and the words "Magistrate of the District....." in English and the words "District Magistrate....." in the regional languages of their respective Courts.
(7) Magistrates of the First Class..	A circular seal two inches in diameter bearing thereon the Asoka Capital Motif with the words "Satyameva Jayate" in Devnagari script inscribed below it, and the words "Magistrate of the First Class....." in English and the words "First Class Magistrate....." in the regional languages of their respective Courts.

Public authority.	Description of the official seal.
1	2
(8) Magistrates of the Second Class ..	A circular seal one and half inches in diameter bearing thereon the Asoka Capital Motif with the words "Satyameva Jayate" in Devnagari script inscribed below it, and the words "Magistrate of the Second Class....." in English and the words "Second Class Magistrate....." in the regional languages of their respective Courts.
(9) Magistrates of the Third Class ..	A circular seal one and half inches in diameter bearing thereon the Asoka Capital Motif with the words "Satyameva Jayate" in Devnagari script inscribed below it, and the words "Magistrate of the Third Class....." in English and the words "Third Class Magistrate....." in the regional languages of their respective Courts.

This notification shall come into force on 26th January 1950.

THE BOMBAY PREVENTION OF GAMBLING ACT, 1887 (BOM. IV OF 1887).

G. N., H. D., No. 3842/2, dated 23rd August 1928 (B. G., Pt. I, p. 1795). **S. 6.**

In exercise of the powers conferred by section 6 of the Bombay Prevention of Gambling Act, 1887 (Bom. IV of 1887), the Governor in Council is pleased to empower the Assistant Superintendent of Police or Deputy Superintendent of Police for the time being in charge of each of the several areas mentioned below to issue special warrants under the said section :—

City or Cantonment area in the Ahmedabad District,
City or Cantonment area in the Poona District,
City or Cantonment area in the Sholapur District,
City or Cantonment area in the Belgaum District,
City or Cantonment area in the Dharwar District.

THE MATADARS ACT, 1887 (BOM. VI OF 1887).

G. N., R. D., No. 8511, dated 31st August 1909 (B. G., Pt. I, p. 1625). **S. 1.**

In exercise of the powers conferred by section 1 of the Matadars Act, 1887 (Bom. VI of 1887), the Governor in Council is pleased to extend the provisions of the said Act to the following Mewasi villages in the Kalol Taluka of the Panch Mahals District :—

1. Khanpur.
2. Ambalanu Muvadu.
3. Royan.
4. Paruna.
5. Junu Muvadu Bhukhi.
6. Mokal.
7. Bhelidra.
8. Chalali.
9. Kanod.
10. Vyasda.
11. Rinchhia.
12. Gajapura.
13. Fansi.
14. Bodidra.
15. Adadra.
16. Bedia.
17. Bhadroli Khurad.
18. Karoli.
19. Naran Paginu Muvadu.
20. Pingli.
21. Vintoj.

G. N., R. D., No. 1339, dated 27th February 1888. **S. 18.**

In exercise of the power conferred by section 18 of the Matadars Act, No. VI of 1887, published at pages 1–11 of the *Bombay Government Gazette* of the 30th January 1888, Part IV, His Excellency the Governor in Council is pleased to make the following rules :—

1. On, or in anticipation of, the occurrence of a vacancy in the office of Patel in any village to which section 15 of the above Act applies, the Collector, or with his sanction, an Assistant or Deputy Collector, shall issue a notice in the form hereto appended to all the Matadars of the village, fixing a date and place for the election of a Patel.

2. The date fixed for the election shall not be less than 14 days from the date of notice.

3. The notice shall be endorsed by all the Matadars of the village, or by as many of them as can be found, and a copy shall be posted at the Chowra or at some other conspicuous place in the village. The original notice endorsed by the Matadars shall be returned to the officer issuing it before the date fixed for the election.

4. Only females shall be allowed to vote by proxy, such proxy being on paper bearing one Rupee stamp and duly attested.

5. Each voter shall, in the presence of the presiding officer, write or cause to be written the name of his or her nominee on a piece of paper which shall be signed by the voter.

6. No elector shall vote for more than one person, provided that an elector who is the guardian of a minor Matadar of the village, shall have two votes on each question.

7. An election fails,—

(1) if a majority of the Matadars do not attend in person (or in case of females, by proxy);

(2) if no person eligible under the Act obtains the votes of more than half the total number of Matadars of the village;

(3) if the person elected is unfit or disqualified, or within 14 days declines, or fails to accept, the appointment.

8. If a majority of the total number of Matadars then and there agree upon the term, exceeding five years, during which their nominee is to serve, he shall be appointed for such term. Failing such agreement the term shall be five years (section 24).

9. When an election fails, the presiding officer shall call on the representative Matadar of the family, whose turn it is to officiate, to serve in person or by deputy.

Form of Notice referred to in Rule 1.

WHEREAS a (Revenue and Police) Patel has to be appointed for the village of in the more Taluka of the District, from the day of 19 , notice is hereby given to the undermentioned Matadars of the said village to appear at on the day of 19 , at o'clock in the office of the Collector of , there to elect a member of the family of Matadar, to serve in the abovementioned office for such term, not less than five years, as the Matadars may, on the date abovementioned, agree to fix :—

Matadars.

1.

2.

3.

4.

2. The abovementioned Matadars are also hereby informed that unless at least of them agree before me, on the date above specified, in nominating a qualified member of the family abovementioned the representative Matadar whose term has arrived will be appointed.

Date of issue.

Collector.

THE BOMBAY MUNICIPAL CORPORATION ACT, (BOM. III OF 1888).

G. N., G. D., No. 4010, dated 14th November 1888 (B. G., Pt. I, p. 954). **S.509 (1) & (2).**

In exercise of the power conferred by sub-sections (*1*) and (*2*) of section 509 of the City of Bombay Municipal Act, 1888, the Governor in Council is pleased—

(1) subject to the proviso to sub-section (*1*) of the said section, to prescribe the following fees to be paid on applications, appeals or references made under the said Act to the Chief Judge of the Court of Small Causes of Bombay, viz. :

(*a*) on every application, appeal or reference made under sections 18, 20, 33, 217, 244, sub-section (*3*), 301, sub-section (*4*), 503, or 507 of the said Act, a fee of ten rupees :

Provided that when any reference under section 503 relates to a demand by the Municipal Commissioner for payment of expenses of which the amount does not exceed Rs. 180, the fee shall be at the reduced rate of one rupee for every Rs. 20 or fraction of Rs. 20 of the said amount ;

(*b*) on every application made under section 504 of the said Act, the same fee which would be leviable under the Presidency Small Cause Courts Act, 1882, on the institution of a suit for the recovery of a sum of the like amount as that to which such application refers or if the amount exceeds Rs. 2,000, the same fee which would be leviable on a plaint in a suit in the Small Cause Court for Rs. 2,000 ;

(*c*) on every summons and other process issued in any proceeding under any section other than 504 of the said Act, a fee of one rupee ; and on every summons and other process in any proceeding under section 504, a fee of the same amount as would be payable in respect of such summons or process under the Presidency Small Cause Court Act, 1882, in a suit for a like amount : Provided that if the proceeding under section 504 be in respect of a sum exceeding Rs. 2,000 the fee leviable on every summons and other process shall be the fee leviable for such summons or process in a suit for Rs. 2,000 under the Presidency Small Cause Court Act, 1882.

(2) to determine that any fee prescribed under clause (*a*) or clause (*b*) of para 1 of this Notification shall be payable in the first instance by the person presenting the application, appeal, or reference on which such fee is to be paid, the ultimate liability for the same being subject to any order which the said Chief Judge may pass under section 508, sub-section (*3*) of the said Act.

THE BOMBAY VILLAGE SANITATION ACT, 1889 (BOM. I OF 1889).

G. N., G. D., No. 8847, dated 16th June 1933 (B. G., Pt. I-A, p. 141).

S. 19(5). Bombay Village Sanitation Boards Election Rules, 1932.

In exercise of the powers conferred by clause (5) of section 19 of the Bombay Village Sanitation Act, 1889 (Bom. I of 1889), as amended by Bombay Act No. XXV of 1931, the Government of Bombay is pleased to make the following rules regulating the election of members of Village Sanitary Boards.

1. *Short title.*—These rules may be called the Bombay Village Sanitation Boards Election Rules, 1932.

2. *The word "Mamlatdar" to include "Mahalkari".*—Wherever the word "Mamlatdar" is used in these rules it includes "Mahalkari".

3. *Collector to fix the number of members.*—The Collector shall, as soon as may be after the issue of a notification by the Commissioner under section 7 (2) of the Act, fix, under section 19 (1) of the Act, the total number of members of the Sanitary Board and shall also fix the number of elected members.

4. *Preparation and publication of lists of voters.*—The Mamlatdar, or other person appointed by him in this behalf, shall, as soon as may be after the issue of the notification referred to in rule 3 above, and thereafter whenever a date has been fixed for a general election of persons to fill the places of persons whose term has expired, or whenever the Collector so directs, prepare in the vernacular of the taluka, a list of persons (male and female) qualified to vote at elections of members of the Sanitary Board under section 19 (3) of the Act, and the list so prepared shall be called the voters' list. The list so prepared shall be published at the Chavdi of the village, or such place as the Mamlatdar deems fit, at least two months before the date of the elections.

(*a*) The words "not being less than eighteen years of age" in section 19 (3) of the Act, shall mean all those who have completed eighteen years of age three months before the date of preparation of the voters' list.

(*b*) the word "resident" used in the same section shall mean all those who, before the date on which the voters' list is prepared, have resided in the village for a period of not less than three months.

5. *Revision of list of voters.*—(1) Any person whose name is not entered in the voters' list published as aforesaid and who claims to be entered therein, and any person whose name is entered in the said list who thinks that his own name or that of some other person has been wrongly entered therein, or omitted therefrom, may apply in writing, within a fortnight from the date of publication of the list, to the Mamlatdar for an amendment thereof. An appeal against the decision of the Mamlatdar may be preferred to the Collector within seven days of the date of the Mamlatdar's order.

(2) The voters' list shall be revised in accordance with the decisions of the Mamlatdar and Collector and published by the Mamlatdar in the manner stated in rule 4 above at least fifteen days before the date of the election. The list so published shall be called the electoral roll.

6. *Notice regarding mode of election.*—The Mamlatdar shall state in the notice to be issued under sub-section (4) of section 19 of the Act whether the election shall be by ballot or otherwise.

7. *Election when to be held.*—The election shall be held not less than one month before the date on which the term of office of the members will commence.

8. *Procedure at elections when the election is by show of hands.*—On the appointed day, place and time the Mamlatdar or other person appointed by him in this behalf shall preside at the meeting, and he shall be called the Presiding Officer. The Presiding Officer shall first exclude from the meeting place all persons whose names are not entered on the electoral roll and take steps to prevent their return. When the election is by show of hands, and not by ballot, the following procedure shall be followed by the Presiding Officer :—

(*i*) He shall require candidates seeking election to the Sanitary Board to come forward. He shall then record the names of those candidates who are not ineligible under section 19 (2) of the Act. If any candidate is held ineligible the Presiding Officer should record briefly the reasons therefor.

(*ii*) He shall then explain to the voters the method of election below and the number of persons to be elected.

(*iii*) If there are not more candidates than the number of persons to be elected those who stand and are eligible shall be declared elected.

(*iv*) Otherwise, the names of every one of those who stand and are eligible shall be put to vote separately by show of hands or by separation into "Ayes" and "Noes" groups, or in any other convenient way in such manner that the number of votes received by each of the candidates can be ascertained and recorded. The candidates shall be declared elected in the order of the number of votes secured by them. In the event of there being an equal number of votes in favour of two or more persons who are willing to take office, and the addition of one vote will entitle any of the persons to be elected the determination of the person or persons to whom such one additional vote shall be deemed to have been given shall be made by the Presiding Officer by lot in such manner as he shall deem fit.

9. *Procedure at elections when the election is by ballot.*—When the election is directed by the Collector to be made by ballot the procedure shall be as follows :—

(*i*) No candidate shall be eligible for election unless an application is made by the candidate to the Mamlatdar signifying his willingness to serve on the Board at least ten days before the date fixed for the election.

(*ii*) The Mamlatdar, or other person appointed by him in this behalf, shall endorse on each application, on receipt of it, his decision, accepting or rejecting the same, and if the application is rejected shall record in writing a brief statement of his reasons for such rejection and inform the candidate accordingly. An appeal may be made to the Collector within three days of the order passed by the Mamlatdar or the officer appointed by him.

(*iii*) The Mamlatdar or the other person appointed by him in this behalf shall prepare a list of candidates accepted for election and shall assign to each of them a separate and distinct symbol which shall be posted at the village Chavdi with the list of accepted candidates at least twenty-four hours before the time fixed for the election.

(*iv*) If the number of accepted candidates is equal to the number of seats all such candidates shall be declared by the Mamlatdar to be duly elected. If the number of such candidates exceeds the number of seats a poll shall be taken in the manner hereinafter prescribed.

(*v*) Before the commencement of the Poll the Presiding Officer, who shall be the Mamlatdar, or an officer appointed by him in this behalf, shall allot one box to each of the candidates and shall cause to be fixed to such box the name and symbol of the candidate to whom it is allotted. Such boxes shall be locked and sealed by the Presiding Officer before the commencement of the election in the presence of the candidates. The boxes shall be kept at the meeting place within a screened partition.

(*vi*) The voters shall one by one proceed to the screened partition and just before entering the partition each voter shall be given as many slips of papers as there are members to be elected. The Presiding Officer shall place a mark in a copy of the electoral roll against the name of the voter to denote that he has been given the voting paper. Such slips shall be serially numbered and bearing signature of the Presiding Officer.

(*vii*) After receiving the slips the voter shall enter the screened partition and shall vote by putting the slips into one or more boxes of the candidate or candidates for whom he wishes to vote. He shall not make any mark on the voting paper. He may give all his votes to one candidate or distribute them among the several candidates.

(*viii*) Before the voters proceed to give their votes the method of voting shall be explained to them by the Presiding Officer. The Presiding Officer may give such assistance as may be required to any voter who is under any disability which incapacitates him from voting in the manner prescribed.

(*ix*) Only one voter shall be allowed in the screened partition at a time.

(*x*) After a voter receives the slips and before he leaves the screened partition no person shall be allowed to hold communication with hin.

(*xi*) As soon as the voting is over the Presiding Officer shall exclude all persons other than the candidates and one agent of each candidate from the meeting place. He shall then open one box at a time and count in the presence of such candidates and agents as may be present the votes given to each candidate.

Note.—The agent mentioned above means a person whose name is entered in the electoral roll and who has been declared by the candidate in writing to be his agent for the purpose of the election, such declaration having been delivered to the Presiding Officer before the commencement of the poll.

(*xii*) When the counting of the votes has been completed, the Presiding Officer shall forthwith declare the candidates to whom the largest number of votes is given to be elected in the order of the number of votes secured by them. In the event of there being an equal number of votes in favour of two or more persons who are willing to take office and the addition of one vote will entitle any of the persons to be elected the determination of the person or persons to whom such one additional vote shall be deemed to have been given shall be made by the Presiding Officer by lot in such manner as he shall deem fit.

10. *Declaration of results.*—The Mamlatdar shall cause the name or names of the elected candidate or candidates to be posted at the village Chavdi and shall report the names immediately to the Collector.

11. *Record of proceedings.*—The Presiding Officer shall keep a record of the proceedings.

THE BOMBAY DISTRICT MUNICIPAL ACT, 1901 (BOM. III OF 1901).

G. N., G. D., No. 9114, dated 4th June 1935 (B. G., Pt. I-A, p. 154). S. 55

Amended by G. N., G. D., No. 9114, dated 3rd October 1935 (B. G., Part I-A, page 236).

In exercise of the powers conferred by section 55 of the Bombay District Municipal Act, 1901 (Bom. III of 1901), the Government of Bombay (Transferred Departments) are pleased to declare the asylums, hospitals and houses mentioned in column 2 of the schedule hereto annexed to be suitable for the maintenance and treatment of lepers under any enactment for the time being in force removed from, the municipal districts shown against each in column 1 thereof.

Schedule.

Serial No.	Names of municipal districts.	Name of the asylum, hospital or house declared to be suitable for the maintenance and treatment of lepers resident within or removed from the municipal districts shown against each in column 1.
	Ahmedabad District.	
1	Dholka	Kagrapeth Leper Hospital, Ahmedabad.
2	Viramgam	
3	Prantij	
4	Modasa	
5	Dhandhuka	
6	Sanand	
7	Ranpur	
	Kaira District.	
8	Anand	
9	Borsad	
10	Dakor	
11	Mehmedabad	
12	Kapadvanj	
13	Kaira	
14	Umreth	
	Broach and Panch Mahals District.	
15	Godhra	
16	Dohad	
	Broach and Panch Mahals District.	
1	Ankleshwar	Parvatibai Leper Hospital, Surat.
2	Jambusar	
	Surat District.	
3	Bulsar	
4	Rander	
	Thana District.	
1	Kalyan	Acworth Leper Home, Matunga, Bombay.
2	Bassein	
3	Bhiwandi	

Serial No.	Names of municipal districts.	Name of the asylum, hospital or house declared to be suitable for the maintenance and treatment of lepers resident within or removed from the municipal districts shown against each in column 1.
	Bombay Suburban District.	
4	Ghatkopar-Kirol	Acworth Leper Home, Matunga, Bombay.
5	Vile-Parle	
6	Juhu	
	Bombay Suburban District.	
1	Ghatkopar-Kirol	Edalji Framji Albless Leper Home, Trombay, Bombay Suburban District.
2	Vile-Parle—Andheri	
3	Juhu	
	Nasik District.	
1	Igatpuri	Leper Hospital, Nasik.
2	Nan gaon	
3	Manmad	
4	Bhagur	
5	Sinnar	
6	Yeola	
7	Trimbak	
8	Malegaon	
	Poona District.	
9	Saswad	
10	Jejuri	
11	Baramati	
12	Indapur	
13	Sirur	
14	Talegaon-Dabhade	
15	Alandi	
16	Junnar	
	West Khandesh District.	
1	Nandurbar	Leper Hospital, Sholapur.
2	Shahada	
3	Taloda	
4	Sindkheda	
5	Betawad	
6	Shirpur	
	Poona District.	
7	Saswad	
8	Jejuri	
9	Baramati	
10	Indapur	
11	Sirur	
12	Talegaon-Dabhade	
13	Alandi	
14	Junnar	
	Ahmednagar District.	
15	Sangamner	

Serial No.	Names of municipal districts.	Name of the asylum, hospital or house declared to be suitable for the maintenance and treatment of lepers resident within or removed from the municipal districts shown against each in column 1.
	East Khandesh District.	
16	Yawal	Leper Hospital, Sholapur.
17	Faizpur	
18	Raver	
19	Savda	
20	Parola	
21	Chopda	
22	Dharangaon	
23	Erandol	
	Satara District.	
24	Ashta	
25	Islampur	
26	Karad	
27	Mahableshwar	
28	Mhaswad	
29	Panchgani	
30	Rahimatpur	
31	Satara Suburban	
32	Tasgaon	
33	Vita	
34	Wai	
	Sholapur District.	
35	Barsi	
36	Karmala	
37	Sangola	
	Poona District.	
1	Saswad	Kondhwa Leper Hospital, Poona District.
2	Jejuri	
3	Baramati	
4	Indapur	
5	Sirur	
6	Talegaon-Dabhade	
7	Alandi	
8	Junnar	
	East Khandesh District.	
9	Yawal	
10	Faizpur	
11	Raver	
12	Savda	
13	Parola	
14	Chopda	
15	Dharangaon	
16	Erandol	
	Satara District.	
17	Ashta	Kondhwa Leper Hospital, Poona District.
18	Islampur	
19	Karad	
20	Mahableshwar	
21	Mhaswad	
22	Panchgani	

Serial No.	Names of municipal districts.	Name of the asylum, hospital or house declared to be suitable for the maintenance and treatment of lepers resident within or removed from the municipal districts shown against each in column 1.
	Satara District—contd.	
23	Rahimatpur	Kondhwa Leper Hospital, Poona District.
24	Satara Suburban	
25	Tasgaon	
26	Vita	
27	Wai	
	Bijapur District.	
1	Bagalkot	Leper Hospital, Hindalgi, District Belgaum.
2	Guledgud	
3	Ilkal	
	Dharwar District.	
4	Navalgund	
5	Nargund	
6	Haveri	
7	Byadgi	
8	Ranebennur	
9	Gudguddapur	
	Kanara District.	
10	Karwar	
11	Kumta	
12	Sirsi	
13	Haliyal	
14	Honavar	
15	Bhatkal	
16	Gokarn	
17	Ulvi	
	Belgaum District.	
18	Nipani	
19	Athni	
20	Gokak	
21	Saundatti-Yellamma	
22	Bail-Hongal	
	Ratnagiri District.	
1	Chiplun	Sir Dinshaw Maneckji Petit Leper Hospital, Ratnagiri.
2	Malvan	
3	Vengurla	
	Kolaba District.	
1	Alibag	Leper Hospital, Pui.
2	Mahad	
3	Matheran	
4	Panvel	
5	Pen	
6	Roha Ashtami	
7	Uran	

Serial No.	Names of municipal districts.	Name of the asylum, hospital or house declared to be suitable for the maintenance and treatment of lepers resident within or removed from the municipal districts shown against each in column 1.
	Kolaba District.	
1	Alibag	Leper Hospital, Poladpur.
2	Mahad	
3	Matheran	
4	Panvel	
5	Pen	
6	Roha Ashtami	
7	Uran	

THE BOMBAY COURT OF WARDS ACT, 1905 (BOM. I OF 1905).

G. N., R. D., No. 9606-A, dated 21st September 1908 (B. G., Pt. I, p. 1474).

S. 46. Bombay Court of Wards Rules, 1908.

Amended by G. N., R D., No. 1987, dated 3rd March 1910 (B. G., Pt. I, p. 372).
Amended by G. N. R. D., No., 1849, dated 30th May 1910 (B. G., Pt. I, p. 793).
Amended by G. N., R. D., No. 6295-F, dated 14th November 1922 (B. G., Pt. I, p. 2638)
Amended by G. N., R. D., No. 10258/24, dated 30th March 1928 (B. G., Pt. I, p. 629)
Amended by G. N., R. D., No. 2867/28, dated 23rd May 1930 (B. G., Pt. I, p. 1321)
Amended by G. N., R. D., No. 2867/28, dated 27th October 1930 (B. G., Pt. I, p. 2656).
Amended by G. N., R. D., No. 7479/33, dated 15th January 1938 (B. G., Pt. IV-A, p. 69).
Amended by G. N., R. D., No. 7479/33, dated 19th December 1941 (B. G., Pt. IV-B, p. 963).

In exercise of the powers conferred by section 46 of the Bombay Court of Wards Act, 1905 (Bom. I of 1905), the Governor in Council is pleased to make the following rules, namely :—

Rules.

1. (1) These rules may be called the Bombay Court of Wards Rules 1908.

(2) These rules shall extend to all parts of the State of Bombay to which the said Act extends but shall not apply to estates within the area to which the Gujarat Talukdars' Act, 1888, extends, which are or may be hereafter, under the management of the Talukdari Settlement Officer as the Court of Wards within that area.

(3) In these rules "the Act" means the Bombay Court of Wards Act, 1905.

2. The Court of Wards may remove any guardian appointed for the person of a Government ward for any of the following causes :—

(*a*) for abuse of his trust ;

(*b*) for continued failure to perform the duties of his trust ;

(*c*) for incapacity to perform the duties of his trust ;

(*d*) for ill-treatment, or neglect to take proper care of his ward ;

(*e*) for contumacious disregard of any provision of the Act or of any order of the Court of Wards ;

(*f*) for conviction of an offence implying, in the opinion of the Court of Wards, a defect of character which unfits him to be the guardian of his ward ;

(*g*) for having an interest adverse to the faithful performance of his duties

(*h*) for ceasing to reside within the local limits of the jurisdiction of the Court of Wards ;

(*i*) in the case of a female ward, upon her marriage to a husband who is not, in the opinion of the Court of Wards, unfit to be guardian of such ward :

Provided that the Court of Wards shall not remove a guardian appointed by will or other instrument or appointed or declared under the Guardians and Wards Act, 1890, except with the previous consent of the District Court.

3. *Remuneration of guardians.*—The Court of Wards may award to a guardian such remuneration as, having regard to all the circumstances of the case, it think fit.

4. *Appointment and remuneration of managers.*—Any person interested in the good management of the property of a Government ward under the superintendence of the Court of Wards may be appointed manager of such property. Where for any reason there is no such person available, any person qualified

by character, merit, industry and knowledge may be appointed manager. A manager may be appointed for property comprising a single estate or comprising a group of estates within the limits of a single district, as the Court of Wards, having regard to the size and other circumstances of the estate or estates may deem suitable. The remuneration of such a manager shall be fixed by the Court of Wards with due regard to the financial condition and other resources of the estate or estates placed under his management.

5. *Removal of Manager.*—A manager appointed under the Act may be removed for any of the causes for which a guardian may be removed under rule 2 and for bankruptcy or insolvency and for any special cause rendering it desirable in the opinion of the Court of Wards that he should be removed.

6. (1) The amount of security to be furnished by a manager shall not be less than is sufficient to cover the maximum receipts which it is estimated may be in the hands of the manager at any one time.

(2) Such security may consist of a deposit in the Post Office Savings Bank or of a deposit of Government Promissory Notes or a security bond may be executed in Form A as the Court of Wards shall deem fit in each case.

(3) The Manager shall, if the amount of the security does not exceed one thousand rupees, furnish at least one surety ; in any other case he shall furnish at least two sureties.

(4) Servants of the estate, whose duties require them to deal with money, shall furnish such security as the Court of Wards shall deem fit. Such security shall consist either of a deposit in the Post Office Savings Bank or, with the approval of the Court of Wards any such servant may execute a security bond in Form A.

(5) A register of securities furnished shall be kept in the Huzur Treasury office in form No. I.

7. The following returns shall be rendered by managers to the Court of Wards :—

(1) An inventory of all the property belonging to each estate on first assumption of management in form No. II.

(2) A yearly statement of increase or decrease in the property of each estate and the reasons therefor in form No. II.

(3) A yearly return of demands, collections and balances for each estate in form No. IX.

(4) A monthly return of receipts and payments on account of personal deposits in form No. V.

(5) A monthly return of receipts and expenditure for each estate in form No. IV and a monthly abstract thereof.

(6) A yearly budget estimate for each estate for the year beginning with the 1st August to be submitted on or before the 1st May in duplicate in form No. VII.

8. The Court of Wards shall submit to the State Government an annual consolidated report upon the estates under its superintendence in form No. X, with such variations as may from time to time be prescribed in this behalf by the State Government.

9. (1) All Government securities and securities the interest whereon is guaranteed by the Central Government or State Government shall be forwarded to the Deputy Controller of the Currency, Bombay, for safe custody in cases where it is likely that they will be held for a period longer than five years and interest is intended to be drawn during the period.

All such securities which are likely to be held for less than 5 years and more than 12 months and the interest thereon is intended to be drawn during the period shall be forwarded to the Treasury Officer of the District for safe custody.

(2) All securities of the kind referred to in sub-rule (1) which are likely to be deposited for 12 months or less, or when they are deposited for more than 12 months and when interest is not intended to be drawn during the period, all securities other than those referred to in sub-rule (1), all title-deeds, all Savings Bank Pass Books in which deposits are completed, and all jewellery and ornaments, the use of which is not permitted to the ward, shall be deposited for safe custody in either the Taluka or District Treasury, as the Court of Wards may direct.

10. The delegation of powers to managers shall be notified by notices posted at the offices of the Collector of the district and of the Mamlatdar of the taluka, (and, where the property is situated in the limits of a petha or mahal, of the Mahalkari of the petha or mahal) and at the chavdi or other conspicious place of the village or villages, in which the property concerned is situated.

11. All expenses lawfully incurred in respect of an estate shall be debited to and be recovered out of the income of the estate.

12. The notice prescribed by sub-section (1) of section 14 of the Act shall also be published in one or, if the Court of Wards thinks it necessary, in more newspapers. A copy of such notice shall be sent to each of such persons as are known to be creditors and a copy of it shall be posted at the offices of the Collector of the district, and of the Mamlatdar of the taluka, (and, where the ward resides or any of his property is situated within the limits of a petha or mahal, of the Mahalkari of the petha or mahal) and at the chavdi or other conspicuous place of the village or villages, within which the ward resides or within which any portionof his immoveable property is situated.

13. The schedule of debts and liabilities required to be submitted to the State Government by section 18 of the Act shall be accompanied by a report containing a careful review of the financial position of the estate and shall be accompanied by thefollowing sub-schedules :—

(1) *Sub-schedule of landed property consisting of villages, shares of villages, etc., in the following form* :—

		Details of the property.						
			Area of share.					
District in which the property is situated.	Village in which the property is situated.	Proportional extent of share.	Total	Cultivated.	Rental of share.	The State Government Revenue and cesses chargeable on share.	Area of home farm land in share.	Remarks.
1	2	3	4	5	6	7	8	9

Note.—(*a*) Any encumbrances ascertained should be noted in the Remarks column.

(*b*) If the share consists of a fractional right in any undivided property statistics for the whole of the joint property may be entered in columns 4 to 8, the extent of interest or share being clearly stated in the column of Remarks.

(2) *Sub-schedule of house property* and landed property other than that shown in sub-schedule (1).

(3) *Sub-schedule of moveable property* showing the value of personal property owned by the estate under the classes "(*i*) Cash, (*ii*) Jewels, (*iii*) Grain, (*iv*) other," the total amount of the debts and arrears of rent due to the estate and the amount under each head which is probably recoverable.

(4) *Sub-schedule of income and expenditure* showing the probable average income and expenditure, the establishment ordered to be employed in managing the estate and the scale of pay of such establishment, the sums allotted annually for the maintenance of the ward and his family and for their education, and the instalments by which the debts, if any, are to be liquidated.

14. Every manager shall keep the following accounts :—

(1) A register of securities in form No. I.

(2) An inventory of all the property belonging to each estate on first assumption of management in form No. II.

(3) A day book of receipts and expenditure for each estate in form No. III.

(4) A classified register of receipts and expenditure for each estate in form No. IV (Parts I and II) and a monthly abstract thereof.

(5) A register of receipts and payments on account of personal deposits in form No. V.

(6) A register of advances in form No. VI.

(7) The budget as sanctioned from time to time by the Court of Wards in form No. VII.

(8) A statement showing the liabilities and progress made in liquidating the debt of each estate in form No. VIII.

15. Every manager shall send to the Mamlatdar of the taluka—

(*a*) as soon as the inventory in form No. II is completed, a copy thereof and

(*b*) at the end of each year, a copy of the yearly statement of increase and decrease in form No. II.

16. The accounts to be kept by the manager shall be for the revenue year commencing with the 1st August and ending with the 31st July.

17. The manager shall promptly pay into the Treasury all collections of money.

18. The manager shall be given a permanent advance to be fixed in each case by the Court of Wards.

19. All sums required for expenditure shall be drawn from the Treasury by cheques.

20. Where the Court of Wards withdraws its superintendence from the property of a Government ward, the following records and documents shall ordinarily, and subject to the provisions of rules 21 and 22, be made over to the land-holder, namely :–

(1) Correspondence between the Court of Wards and the vendor regarding any purchase of property made on behalf of the estate, together with all documents affecting the purchase.

(2) Correspondence between the Collector and the purchaser regarding the sale of any property belonging to the estate, together with all documents affecting the sale.

(3) Correspondence between the Court of Wards and any persons who have any claims against or are indebted to the estate regarding such claims and all documents appertaining thereto.

(4) Correspondence between the Court of Wards and lessees regarding leases granted by the Court of Wards.

(5) Papers connected with proceedings in civil, revenue or criminal courts relating to the person or property of a Government ward.

(6) Pattas and all other documents entered into between the Court of Wards and farmers of forest or other revenue ; and counterparts received from them.

(7) Such statement of accounts as may suffice to show clearly the financial position of the estate at the time of its release from management.

Note.—Copies of any accounts or vouchers will be given on application at the expense of the land holder and the examination of the accounts will be permitted to him.

(8) Bonds and other documents securing repayment of money to the estate.

21. The Court of Wards may, in its discretion, direct that any of the records and documents referred to in rule 20 shall not be made over to the land holder, and may in its discretion, on the application of the land-holder, direct that any records or documents not referred to in rule 20 shall be made over to the land-holder.

22. Without the express sanction of the Court of Wards none of the following records or documents shall be made over to the land-holder, namely :—

(*i*) Correspondence between the Court of Wards or manager and any superior authority and reports made by the Court of Wards or manager.

(*ii*) Correspondence with and opinions of the Remembrancer of Legal Affairs or Government Pleader and copies of such correspondence or opinions.

(*iii*) Correspondence reflecting in any way on the conduct of the Government servants or employees of the Court of Wards.

(*iv*) Correspondence relating to the allowances made to or claims preferred by members of the family of the land-holder.

23. The Court of Wards may from time to time delegate all or any of its powers to the Collector of any district in which any part of the property of a Government ward is situated, and may at any time revoke such delegation : Provided that the following powers shall not be delegated without the special sanction of the State Government, namely :—

(*i*) The power to expend any sum or incur any liability exceeding Rs. 5,000 in amount or value ;

(*ii*) the power to compromise any claim exceeding Rs. 5,000 in value ;

(*iii*) the power to raise a loan of an amount exceeding Rs. 1,000 ;

(*iv*) the power generally to revise tenants' rents ;

(*v*) the power to remove a manager in receipt of a salary of or exceeding Rs. 150 *per mensem* ;

(*vi*) the power to sanction a budget for an estate yielding a gross income of or exceeding Rs. 20,000 *per annum* ;

(*vii*) the power to sanction expenditure which has not been provided for in a budget and which cannot be provided for by re-appropriation ;

(*viii*) the power to prescribe under rule 14(8) forms of accounts to be kept by managers ;

(*ix*) the power to give sanction to making over to a landholder records which may not be made over under rule 20 or records which under rule 22 may not without the express sanction of the Court of Wards be made over, and to refuse to make over any records referred to in rule 20 ;

(*x*) the power to write off irrecoverable amounts exceeding Rs. 100 due to an estate.

N.B.—In cases of emergency, the Collector may assume the power of the Court of Wards in any case coming under heads (*i*) to (*ix*) submitting his proceedings without delay to the Court of Wards for confirmation.

FORM A.

KNOW ALL MEN BY THESE PRESENTS that (principal) of (1st surety) of (2nd surety) of are jointly and severally bound to A. B., the Court of Wards, for the division of in the sum of rupees (Rs.) to be paid to the said A. B., or his attorney, executors, administrators, successors or assigns. For which payment to be made we bind ourselves, and each of us, in the whole, our and each of our heirs, executors and administrators jointly and severally by these presents.

Dated this WHEREAS the above bounden (principal) was on the day of 1919 appointed by the said Court of Wards to the office of* for the estate of† in village of in the taluka of in the district of and now holds the said office.

NOW THE CONDITION of the above written bond is such that if the said (principal) whilst he shall hold the said office shall always truly and faithfully perform all his duties appertaining to the said office and act in accordance with the provisions of the Bombay Court of Wards Act, 1905, and the rules for the time being in force thereunder and all orders from time to time given by lawful authority so far as the said Act, rules and orders apply to and define the duties appertaining to the said office and shall duly account for or deliver in such manner and to such person or persons as may by the said A. B., or his attorney, executors, administrators, successors or assigns be required all and every the sum and sums of money and securities for money and all property whatsoever which he may receive or be entrusted with by virtue of his said office and shall not embezzle, withhold, destroy or in any way injure or damage any such moneys, securities or property as aforesaid and further shall indemnify the said A. B., his attorney, executors,

*Here enter name of office, whether manager or otherwise.

†Here enter name of Government Ward.

administrators, successors or assigns against all loss and damage which during his said office as aforesaid may at any time be sustained by the said A. B., his attorney, executors, administrators, successors and assigns by means of the neglect, failure, misconduct, disobedience, omission or insolvency of the said
(principal)

THEN this obligation shall be void and of no effect. Otherwise the same shall be and remain in full force and virtue.

PROVIDED ALWAYS and it is hereby agreed and declared that neither of them the said (1st surety) and (2nd surety) shall be at liberty to terminate their suretyship except upon giving to the said A. B., or his attorney, executors, administrators or successors six months' notice in writing of his or their intention so to do, and his or their liability under this bond shall continue in respect of all omissions and defaults on the part of the said or or both of them occurring up to expiration of the said period of six months.

FORM No. I.

Register of Securities.

Name of Office..... Rule requiring Security.....

Name and designation of officers.	Amount of security.	Nature of security.	Names and residence of sureties, if any, and dates of their bonds.
1	2	3	4

Names and residence of new sureties, if any, substituted for former ones who have died or withdrawn or whose fitness is considered doubtful and dates of their surety bonds.	Amount of security, if any, for which each surety is liable on account of other officers whether in the same or in any other Department.	Opinion of the Court of Wards as to sufficiency of present security and date on which such opinion was recorded.	Remarks.
5	6	7	8

Leave two pages for each office.

The register should be indexed and paged.

FORM No. II.

Inventory of property belonging to the estate of.....
in the taluka of.....in the district of.....

| Immovable property. | | |

FORM No. III.

Day book of receipts and expenditure of the estate of.....
for the year.....

Receipts.					
Date.	Serial No.	From whom received.	On what account.	Amount.	Total including balance.
1	2	3	4	5	6
				Rs. a. p.	Rs. a. p.

Expenditure.					
Date.	Serial No.	To whom paid.	On what account.	Amount.	Total for the day including balance.
1	2	3	4	5	6
				Rs. a. p.	

FORM No. IV.

PART I.

Classified register of receipts of the estate of.....for the month of.....

Head of receipt.	Budget estimate.	Total to end of previous month.	Here enter dates of the months.					Total during month.	Total to date.
			1st	2nd	3rd	4th	5th	and so on	
(Here enter Budget Heads.)									

FORM No. IV.

PART II.

Classified register of the expenditure of the estate of.....for the month of.....

Head of expenditure.	Budget estimate.	Total to end of previous month.	Here enter dates of months.							
			1st	2nd	3rd	4th	5th	and soon	Total during month.	Total to date.	Remarks.
(Here enter Budget Heads.)											

RETURN (FORM IV).

PARTS I & II.

Monthly return of receipts and expenditure (of the estate of.....for the month of.....

Receipts.	Budget estimate.	Total to end of previous month.	Total of the month.	Total to date.
(Here enter Budge Heads.)				

Disbursement.	Budget estimate.	Total to end of previous month.	Total in this month.	Total to date.
(Here enter Budget Heads.)				

FORM No. V.

Monthly Return / Register } of receipts and payments on account of personal deposits.
Estate of.....Treasury of.....

taluka of.....district of.....

Date.	No. of payment cheque.	Amount received.	Amount paid.	Balance after each transaction.	Initials of the Officer.	Remarks.

FORM No. VI.

Register of advances of the estate of.....

No.	Name and residence of persons to whom money is advanced.	Nature of document.	Amount of advance.	Date from which limitation runs.	Date from which limitation expires.	Recoveries.		Remarks.
						Date.	Amount.	

Key to Register of Advances.

Year, month and date of the period on which limitation ends.	Person from whom amount is due.	Amount.	Date of Execution of Document.	Remarks.
1	2	3	4	5

FORM VII.

Budget Estimate for the estate of.....in the taluka of .....

in the district of.....for the year 19 -19 .

Receipts.	Amount of sanctioned scheme.	Actual of the previous year.	Estimate for the current year.	Estimate for the ensuing year.	Disbursement.	Amount of sanctioned scheme.	Actuals of the previous year.	Estimate for the current year.	Estimate for the ensuing year.
1	2	3	4	5	6	7	8	9	10
I. Opening balance.					1. The State Government revenue and cesses.				
II. Agricultural lands—					C.2. Rent to superior landlords.				
1. Rents and cesses					3. Management of property.				
2. Home farm cultivation.					4. Contribution for the general management of estates.				
3. Miscellaneous					5. Maintenance of proprietors.				
III. Forest.					6. Education.				
IV. House rent.					7. Miscellaneous.				
V. Interest.					8. Interest on loans.				
VI. Loans.					E-9. Estimated outlay on account of estate improvements.				
VII. Miscellaneous.					10. Investments.				
VIII. Total receipts.					11. Loans repaid.				
IX. Grand total.					Total ...				
					Total Disbursements ...				
					Closing Balance ...				
					Grand Total ...				

FORM No. VIII.

Statement showing the liabilities and progress made in liquidating debt in the Court of Wards.

estate of..... during the year.....

			Debts settled in previous years.		
Name and residence of creditors	Debts due on assumption of charge	Debts incurred in previous years after charge was assumed	By incurring other debts	By sale of property	Rejected by Court of Wards or Civil Court
1	2	3	4	5	6

Debts settled in previous years.				
Remitted by creditors	From current income	Total	Balance of debt at the beginning of the year.	Balance of accumulated interest at the beginning of the year
7	8	9	10	11

(*contd.*)

FORM No. VIII—*contd.*

Statement showing the liabilities and progress made in liquidating debt in the Court of Wards.

estate of..... during the year.....

		Debts settled during current year.		
Additional debts incurred during the year	Interest due for the year	By incurring fresh debts	By sale of property	Rejected by Court of Wards or Civil Court
12	13	14	15	16

Debts settled during current year.						
Remitted by creditors	From current income	Total	Interest paid during the Year	Balance of debts at the end of the year	Balance of accumulated interest at the end of the year	Debt by which it was expected on assumption of management that estate would clear of debts.
17	18	19	20	21	22	23

FORM No. IX

Yearly return of demands, collections and balances.

Estate of..... in the taluka of..... in the district of..... for the year ending.....19 .

Number of villages.	Demands.			Collections.		
	On account of arrear of past years.	Of the current year.	Total.	Of arrears of past years.	Of the current year.	Total.
1	2	3	4	5	6	7

Written off		Balance outstanding at the end of			Remarks.
Of past Years.	Of current Year.	Of past Years.	Of the current year	Total.	
8	9	10	11	12	13

FORM No. X.

Skeleton Form of the Report of Court of Wards, and Statements to be appended thereto.

From

_____

_____;

To

_____

_____.

Dated _____19

Sir,

I have the honour to submit the Annual Report on the working of the management of private Estates by the Court of Wards for the year ending 31st July 19 .

2. NUMBER OF ESTATES UNDER MANAGEMENT.

(Here give the number of Estates in the beginning of the year, new one added and released during the year. In the case of the latter, state briefly the reasons for termination of the management).

3. Income.

4. EXPENDITURE.

5. COLLECTION OF ESTATES DUES.

6. THE STATE GOVERNMENT REVENUE CESSES AND RATES.

(Any remissions granted by the State Government should be stated in this para.)

7. COST OF MANAGEMENT.

8. ADVANCES GRANTED TO CULTIVATORS.

9. SPECIAL SCHEME FOR MANAGEMENT.

10 MAINTENANCE AND EDUCATION OF WARDS.

11. REPAYMENT OF DEBTS AND EXISTING LIABILITIES.

12. GENERAL REMARKS.

I have the honour to be,
Sir,
Your most obedient servant,

STATEMENT I

Showing the general position of estate under the management of the State Government

(Details are given only for estates with gross income of Rs. 10,000 and above Figures for other estates are lumped together.)

1 Serial No.	2 Name of District.	3 Name of estate.	4 Total area of estate	5 Cultivated area.	6 Uncultivated area.	7(i) Assessment.	7(ii) Cesses.	7(iii) Other demands.	7(iv) Total.	8(i) Income due from agricultural land excluding land revenue.	8(ii) Income due from house rent.	8(iii) Total.	9 Total gross income recovered.	10 Total gross expenditure.	11 Invested.	12 Uninvested.	13 Total liabilities.	14 Cost of management.	15 Percentage of gross income.	16 Remarks.
						Total Government demand.				Total gross income.					Balance.					
1	Kaira ..	A B ..								CD										
2		E F								G H										
3		I J								K L										
4 to 10		Totals for small estates.																		

STATEMENT II.

Showing the efficiency of rent collection in estates under the management of the State Government.

Name of District.	Name of Estate.	Demands.			Collection.		
		Current.	Arrears.	Total.	On account of current year.	On account of arrears.	Total.

Amount written off.	Balance.			Details of Balances.
	Converted into bonds of decrees.	Others.	Total.	

STATEMENT III.

Showing progress made in liquidation of debt in Court of Wards estates during the year.

Name of District.	Name of Estate.	Debts due on assumption of charge.	Debts incurred in previous years after charge was assumed.	Additional debts incurred during year.	Debts						
					By incurring fresh debts.	By sale of property.	settled during current year.				
							Rejected by Court of Wards or Civil Court.	Remitted by creditors.	From current income.	Balance.	Date by which it was expected on assumption of management that estate would be clear of debt.

THE MAMLATDARS' COURTS ACT, 1906 (BOM. II OF 1906).

G. N., J. D., No. 7788, dated 9th December 1902 (B. G., Pt. I, p. 2053). S. 3(a)

In exercise of the powers conferred by section 3, clause (1), and by section 4 of the Mamlatdars' Courts Act, 1876 (Bombay Act III of 1876), the Governor in Council is pleased to direct, in supersession of the Notification of the Government of Bombay in the Judicial Department, No. 157, dated the 9th January 1900, except so far as it relates to the taluka of Shrigonda and Karjat, that the Mamlatdars of the marginally noted talukas in the district of Ahmednagar shall have the powers of a Mamlatdar described in section 4 of the said Act within the territorial limits of their respective revenue charges : and to withdraw the powers conferred by the marginally noted Notifications of the Government of Bombay in the Judicial Department upon the persons specially authorised therein to exercise the powers of a Mamlatdar under the said Act.

1. Nagar.
2. Parner.
3. Jamkhed.
4. Shevgaon.
5. Nevasa.
6. Rahuri.
7. Kopargaon.
8. Sangamner.
9. Akola.

1. No. 6457 of 13th October 1902.
2. No. 6556 of 17th October 1902.
3. No. 6456 of 13th October 1902.
4. No. 3626 of 5th June 1902.
5. No. 7628 of 26th November 1901.
6. No. 8285 of 10th December 1900.
7. No. 6560 of 17th October 1902.
8. No. 8285 of 10th December 1900.
9. No. 8284 of 10th December 1900.

G. N., J. D., No. 8141, dated 23rd December 1902 (B. G., Pt. I, p. 2125). S. 3(a)

In exercise of the powers conferred by section 3, clause (1), and by section 4 of the Mamlatdars' Courts Act, 1876 (Bombay Act III of 1876) the Governor in Council is pleased to direct, in supersession of so much of Government Notification No. 157, dated the 9th January 1900, as relates to the talukas of Shrigonda and Karjat, that the Mamlatdars of the said Talukas in the district of Ahmednagar shall have the powers of a Mamlatdar described in section 4 of the said Act within the territorial limits of their respective revenue charges : and to withdraw the powers conferred by the marginally noted Government Notifications upon the persons specially authorised therein to exercise the powers of a Mamlatdar under the said Act.

No. 2417, dated the 4th April 1900.
No. 7072, dated the 10th November 1902.

G. N., J. D., No. 8142, dated 23rd December 1902 (B. G., Pt. I, p. 2125). S. 3 (a)

In exercise of the powers conferred by section 3, clause (1), and by section 4 of the Mamlatdars' Court Act, 1876 (Bombay Act III of 1876), the Governor in Council is pleased to direct, in supersession of Government Notifications No. 3931 and No. 3932, dated the 18th June 1902, that the Mamlatdar, taluka Karmala in the district of Sholapur, shall have the powers of a Mamlatdar described in section 4 of the said Act, within the territorial limits of his revenue charge ; and to withdraw the powers conferred by Government Notification No. 3930, dated the 18th June 1902, upon the person specially authorised therein to exercise the powers of a Mamlatdar under the said Act.

S. 3(a)

G. N., J. D., No. 257, dated 20th January 1903 (B. G., Pt. I, p. 93).

In exercise of the powers conferred by section 3, clause (1), and by section 4 of the Mamlatdars' Courts Act, 1876 (Bombay Act III of 1876), the Governor in Council is pleased to direct, in supersession of so much of Government Notification No. 3441, dated the 15th May 1900, as relates to the taluka of Anand and Government Notification No. 7698, dated the 29th November 1901, relating to the taluka of Nadiad, that the Mamlatdars of the said talukas in the district of Kaira shall have the powers of a Mamlatdar described in section 4 of the said Act, within the territorial limits of their respective revenue charges: and to withdraw the powers conferred by the marginally noted Government Notifications upon the persons specially authorized therein to exercise the powers of a Mamlatdar under the said Act.

No. 6103, dated the 27th September 1902.
No. 5333, dated the 22nd August 1902.

S. 5(1)

G. N., J. D., No. 3136, dated 3rd May 1899 (B. G., Pt. I, p. 551).

Modified by G. N., H. D., No. 8918/3-III, dated 13th April 1937.

Under the provisions of section 4 of the Mamlatdars' Courts Act, III of 1876, the Governor in Council is pleased to order the transfer of the villages and Cantonment named below from the territorial limits of the jurisdiction under the aforesaid Act of the Mamlatdar, taluka Haveli in the Poona District, to those of the City Mamlatdar, Poona, with effect from the 1st June 1899 :—

1. Kothrud.
2. Wanauri.
3. Ghorpadi.
4. Ambegaon Khurd and Budruk.
5. Katraj.
6. Aundh.
7. Yerandavane.
8. Bhamburda.
9. Mundhava.
10. Kondhwe Khurd and Budruk.
11. Sangvne Haveli.
12. Munjeri.
13. Dapudi.
14. Bopodi.
15. Mahamadvadi.
16. Hadapsar.
17. Vadgaonsheri.
18. Bopkheb.
19. Yerrowda.
20. Mali.
21. Parawati.
22. Hingne Budruk and Khurd.
23. Pashan.
24. Kalas.
25. Narhe.
26. Dhan Kavadi.
27. Poona Cantonment.
28. Kirkee.

G. N., J. D., No. 161, dated 9th January 1900 (B. G., Pt. I, p. 78). S. 5(1)

Under the provisions of section 4 of the Mamlatdars' Courts Act, 1876, the Governor in Council is pleased, in supersession of any previous orders, to fix as the territorial limits of the jurisdictions of the Mamlatdars of the following talukas in the Ahmedabad District the limits of the Headquarter Stations of their respective talukas :—

Viramgam.	Daskroi.
Dhandhuka.	Sanand.
Dholka.	Gogha.
Prantij.	

G. N., J. D., No. 570, dated 23rd January 1900 (B. G., Pt. I, p. 173). S. 5(1)

Amended by G. N., H. D., No. 8918/3-I, dated 13th April 1937.

Under the provisions of section 4 of the Mamlatdars' Courts Act, 1876, the Governor in Council is pleased, in supersession of any previous orders, to fix as the territorial limits of the jurisdictions of the Mamlatdars of the following talukas in the Broach District the limits of the Headquarter Stations of their respective talukas :—

Vagra.	Broach.
	Jambusar.

G. N., J. D., No. 963, dated 7th February 1900 (B. G., Pt. I, p. 238). S. 5(1)

Under the provisions of section 4 of the Mamlatdars' Courts Act, 1876, the Governor in Council is pleased, in supersession of any previous orders, to fix the limits of the Headquarter Station of taluka Ankleshwar as the territorial limits of the jurisdiction of the Mamlatdar of taluka.

G. N., H. D., No. 8918/3-III, dated 13th April 1937 (B. G., Pt. I, p. 818). S. 5(1)

In exercise of the powers conferred by sub-section (*1*) of section 5 of the Mamlatdars' Courts Act, 1906 (Bom. II of 1906), and in modification of Government Notification in the Judicial Department, No. 3136, dated the 3rd May 1899, the Government of Bombay is pleased to exclude the following villages from the territorial limits of jurisdiction under the said Act of the Mamlatdar, Poona City, and include them within the territorial limits of jurisdiction of the Mamlatdar of the Haveli Taluka, with effect from the 15th May 1937 :—

1. Kothrud.
2. Ambegaon Khurd and Budruk.
3. Katraj.
4. Kondve Khurd and Budruk.
5. Sangvi-Haveli.

6. Dapodi.
7. Mahomedwadi.
8. Hadapsar.
9. Vadgaonsheri.
10. Bopkhel.
11. Hingne Budruk and Khurd.
12. Pashan.
13. Kalas.
14. Narhe, and
15. Dhankavadi.

S. 5(1) **G. N., H. D., No. 8918/3-V, dated 7th May 1937 (B. G., Pt. I, p. 1139).**

In exercise of the powers conferred by sub-section (*1*) of section 5 of the Mamlatdars' Courts Act, 1906 (Bom. II of 1906), and in supersession of Government Notifications, Judicial Department, Nos. 874, 875, 876 and 877, dated the 3rd February 1902, the Government of Bombay is pleased to include the following villages in the Niphad and Yeola Talukas and Chandor Mahal within the territorial limits of jurisdiction under the said Act of the Mamlatdars of the Niphad and Yeola Talukas and Mahalkari of Chandor Mahal respectively in the Nasik district, namely :—

Niphad Taluka.

1. Vinchur.
2. Saykhede.
3. Takli.
4. Kotumgaon.
5. Pimpalgaon-Najik.
6. Nimgaon Vakda.

Yeola Taluka.

1. Nimgaon Madhe.
2. Ambegaon.
3. Dhulgaon.
4. Somthan Des.
5. Babhulgaon.
6. Nyaharkhede
7. Desmane.
8. Pimpalgaon Lep.
9. Paregaon.
10. Dhanakwadi.
11. Adgaon Repal.
12. Valadgaon.
13. Manori.
14. Satare.
15. Nevurgaon.
16. Kasarkhede.

Chandor Mahal.

1. Konkankhede.
2. Mesankhede.
3. Dongorgaon.
4. Dhodambe.

THE PRINCE OF WALES MUSEUM ACT, 1909 (BOM. III OF 1909).

G. N., G. D., No. 1386, dated 6th March 1911 (B. G., Pt. I, p. 388). **S. 5.**

Amended by G. N., G. D., No. 5446-A, dated 9th September 1911.
Amended by G. N., G. D., No. 10789, dated 19th October 1920.
Amended by G. N., G. D., No. 1637, dated 30th January 1922.
Amended by G. N., G. D., No. 1637, dated 25th May 1922.
Amended by G. N., G. D., No. 1334-D, dated 16th July 1923.
Amended by G. N., G. D., No. 1637, dated 26th August 1932.
Amended by G. N., G. D., No. 1637, dated 15th November 1932.
Amended by G. N., G. D., No. 1637, dated 29th February 1936.
Amended by G. N., G. D., No. 1637, dated 9th September 1936.
Amended by G. N., G. D., No. 4291, dated 6th March 1937.
Amended by G. N., G. D., No. 2106/33, dated 29th December 1937.
Amended by G. N., G. D., No. 1637, dated 29th July 1941.
Amended by G. N., G. D., No. 1637, dated 18th December 1941.
Amended by G. N., G. D., No. 1637, dated 17th February 1942.
Amended by G. N., G. D., No. 1637, dated 20th March 1942.
Amended by G. N., E. D., No. 8029, dated 11th January 1950.

In exercise of the powers conferred by section 5 of the Prince of Wales Museum Act, 1909 (III of 1909), the Governor in Council is pleased to make the following rules :—

PRINCE OF WALES MUSEUM OF WESTERN INDIA.

Rules for the purposes of section 5 of Act III of 1909.

1. The following provisions shall be observed with respect to the Meetings of the Board, namely :—

Board's Meetings.

(*a*) The Board shall meet together at least once in every 6 months.

(*b*) At the first Meeting in each official year the Board shall appoint a Chairman from among their number.

(*c*) The Chairman may, when he thinks fit, and shall, upon the written request of at least two Trustees, call a Special Meeting.

(*d*) The Meeting shall be convened by the Secretary, who shall send to each member, not later than the day previous to a Meeting, the list of business, and no business not entered on such list shall be transacted without the consent of the Meeting. In the case of members not residing in Bombay notice of the business should reach them in time to permit of their attending the Meeting.

(*e*) No business shall be transacted at any meeting unless at least four Trustees are present from the beginning to the end of such meeting : provided that if in consequence of the operation of this sub-rule a meeting is adjourned, the quorum required by the said sub-rule shall not be necessary for the transaction of business at such adjourned meeting. But no business shall be brought before such adjourned meeting other than that which was in the agenda of the meeting which was postponed for want of a quorum.

(*f*) Every Meeting shall, if the Chairman is present, be presided over by him ; if he be absent, by any one of the Trustees present who may be chosen by the Meeting.

(*g*) The minutes of the previous Meeting shall be previously circulated and be taken as read, unless the majority of the members present request that such minutes be read.

(*h*) If any member present draws the attention of the Chairman to any portion of the minutes of the previous Meeting as being erroneously entered in the Minute Book, such amendment as to the Chairman may seem proper shall be made before the minutes are signed.

(*i*) The business before a Meeting of the Board shall, ordinarily be discussed informally. But if in the interests of order it appears desirable to discuss any particular question in a formal manner, the Chairman may, with the consent of the Meeting, direct that the discussion of this question be formal. In such case a motion or amendment must be duly proposed and seconded, after which alone it will be before the Meeting for discussion. A Trustee, having spoken to a motion or amendment, is not at liberty to speak again to such motion or amendment : provided that the movers of the amendment and the original motion shall have a right of reply in the order named, immediately after which the motion or amendment shall be put to the vote in the manner prescribed in clause (*k*).

(*j*) All remarks must be addressed to the Chairman.

(*k*) When a motion has been put to the meeting, any mamber may propose an amendment. An amendment to an amendment may be proposed. Amendments, whether to a motion or to an amendment, shall be put to the vote either in the reverse order in which they have been moved or in the order in which they affect the motion, whichever method may be adopted by the Chairman at his discretion.

In the event of an amendment being carried, all other amendments, together with the original motion, shall fall to the ground and the amendment so carried shall then be submitted to the meeting as a substantive motion ; amendments to the motion so submitted may be proposed and dealt with as above. This procedure shall be continued until an amendment which has been carried as such is put to the vote and carried as a substantive motion.

(*l*) The consideration of any particular item in the list of business of which three days' notice has not been given shall, at the request of any two members of the Board made before discussion thereon begins, either orally or, if absent, by letter, be postponed until the next Meeting.

(*m*) Written speeches shall not be read.

(*n*) Every motion and amendment shall be submitted in writing to the Chairman. The Chairman shall have power to divide into two or more distinct propositions any motion or amendment which, in his opinion, is so complicated as to be likely to lead to confusion or inconvenience be being voted upon as one proposition.

(*o*) All questions shall be decided by a majority of votes of the Trustees present, the President having a second or casting vote in all cases of equality of votes.

(*p*) If a poll be demanded, the names of the Trustees voting and the nature of their votes shall be recorded by the President.

(*q*) The Chairman shall decide summarily all points of order or procedure.

(*r*) If at any time it appears to any Trustee that the language used by a member is improper, he may move that the member should no longer be heard. On such a motion being seconded, it shall be put to the Meeting by the Chairman without discussion, and if two-thirds of the members present vote in favour of it, such member shall not be allowed to address the Meeting any further on the subject.

(*s*) Minutes shall be kept of the names of the Trustees present and of the proceedings of each Meeting in a book to be provided for this purpose, which shall be signed at the next ensuing Meeting by the President of such Meeting and shall be opened to inspection by any Trustee during office hours.

2. The Trustees may, from time to time, appoint Committees, to consist of any member or members of their body, for carrying out the purposes of the Act, and may delegate any of their powers, either with or without restriction or limitation, to such Committees and may revoke any such appointment or extend, vary, modify or annul any delegation made or any restriction or limitation imposed.

Committees.

3. The Trustees may, from time to time, make such regulations and give such directions as to the Trustees may seem expedient regarding—

(*a*) the exercise by any Committees appointed by the Trustees in pursuance of these rules of the powers delegated to such Committees ;

(*b*) the conduct of business entrusted to any such Committees ;

(*c*) the appointment by such Committees of any Sub-committees, to consist of any member or memebers of their own body, for the purpose of conducting or facilitating the conduct of the business entrusted to such Committees ;

(*d*) the employment by such Committees of professional or other expert persons to advise or assist such Committees upon any question arising in connection with the exercise of the powers delegated to such Committees and the terms and condition of such employment ;

(*e*) the holding of Meetings by any Committees appointed by the Trustees in pursuance of these rules ;

(*f*) the procedure to be observed in the convening and holding of Meetings of any Committees so appointed ;

(*g*) the conduct of business at such meetings ;

(*h*) the management, investment or expenditure of funds, and the keeping and rendering of accounts by any Committees appointed by the Trustees in pursuance of these rules ;

(*i*) the making of reports by any Committees so appointed ; and

(*j*) all matters in respect of which any power shall be delegated to or vested in any such Committees.

4. All Committees appointed by the Trustees in pursuance of these rules shall, in the exercise of the powers delegated and in the conduct of matters entrusted to them and in their proceedings, conform to the regulations made and directions given by the Trustees in the manner aforesaid.

5. No delegation made to any Committee in pursuance of these rules shall operate to prevent the Trustees from acting in the exercise of any power so delegated.

6. The Trustees shall keep accounts of all moneys received and expended by them, and shall cause such accounts to be audited annually by the Accountant-General, Bombay, and an abstract of such accounts, together with the Auditor's certificate thereon, shall be pnblished for general information.

Accounts.

7. (1) *Investment of surplus money.*—Surplus moneys of the funds of the Board or of any loan raised under the Act may be deposited with the Imperial Bank of India, or with such other Bank or Banks as may be approved by the State Government, or may be invested in public securities or any of the securities specified in section 20 of the Indian Trusts Act, 1882, or in debentures of the Prince of Wales Museum of Western India.

(2) The Board may, at any time, withdraw any such deposit or dispose of any such securities or debentures and may, in accordance with the provisions of sub-rule (1), redeposit or invest the money so withdrawn or deposit or reinvest the proceeds of the disposal of such securities or debentures.

8. *Investment of sinking fund money.*—Sinking fund moneys may be invested in public securities or in any of the securities specified in section 20 of the Indian Trusts Act, 1882, or in debentures of the Prince of Wales Museum of Western India.

9. The Museum shall in ordinary circumstances be open to the public every day of the year except Mondays, when it shall be closed for cleaning and except on Good Friday and Christmas Day. It shall, however, be kept open on such Mondays as are Gazetted public holidays.

10. Any part or whole of the public galleries may at any time required, remain temporarily closed to the public on account of repairs, arrangemet of exhibits or any other Museum work.

11. The Museum will ordinarily be kept open to the public from 10 a.m. to 6-30 p.m. from March to May ; from 10 a.m. to 6 p.m. in February and from June to September and from 10 a. m. to 5–30 p. m. from October to January.

12. Admission shall be free on all open days except Tuesdays and Thursdays, when an admission fee of two annas per person shall be charged.

Note :—The Trustees shall have discretion to exempt mofussil students from payment of the admission fee on Tuesdays and Thursdays.

13. Visitors are to be decent and orderly in their appearance and behaviour. The officers shall have powers to exclude all disorderly persons, or cause them to withdraw.

14. No smoking, eating or pan-chewing can be permitted in the public galleries of the Museum.

15. Visitors on entering the Museum shall hand over their umbrellas, sticks and similar articles to the attendant at the counter, for custody. The said articles shall be returned to the owners when leaving the Museum. Any article objectionable from the point of view of the Museum shall not be received for custody from any visitors, nor shall he be allowed to take it into the Museum with him.

16. Dogs are not allowed in the Museum.

17. Visitors shall leave their cameras in the custody of the attendant at the counter of the Museum. No sepcimen in the Museum shall be photographed or mechanically reproduced by visitors in any manner without the previous permission of the Officer concerned. Ordinary sketches or drawings of the exhibits, copies of inscription, may, however, be made by visitors but the same shall not be published by visitors without the previous sanction of the Trustees of the Museum.

18. Visitors shall not offer any fees or gratuities to any servant of the Museum. Any servant of the Museum found asking for or taking any fee or gratuity shall be liable to such punishment as the authorities concerned or the Trustees may decide upon.

18-A. Notwithstanding anything contained in rule 18, the provisions of rules 351 354 and 360 of the Bombay Civil Services Rules shall, so far as may be, apply to the Curator of the Archaeological Section, subject to the modification that the powers exercisable by the State Government under the said rules in respect of Government servants shall be exercisable by the Board in respect of the said Curator.

19. Complaints or helpful suggestions, if any, may be made by visitors at the Secretary's office.

20. At times when the Museum is closed to the public the officers of the Museum may admit any student or visitors under special circumstances.

21. Visitors shall not pluck flowers nor in any way damage plants or any structure in the garden or grounds of the Museum.

22. Visitors committing nuisance in any part of the compound of the Museum shall be liable to prosecution.

23. Visitors are not allowed to sleep in the Museum grounds nor hawkers to enter the compound for vending their wares to visitors.

24. Very young children are to be in charge of a responsible person when in the Museum or the garden.

25. Visitors are not allowed to bring dogs into the garden except on leash.

26. The sand-pit in the garden shall be open to unobjectionable children only. No nuisance shall be committed by children in or around the sand-pit.

27. The garden shall be opened and closed to visitors, before and after the opening and closing of the Museum at the discretion of the Trustees.

28. Visitors will not be admitted to any part of the Museum grounds marked as "Private" or "No Admission".

29. The Trustees are empowered to sanction all original works and special repairs and approve estimates for the same, provided, however, that they shall obtain the approval of the State Government to the general design and specifications in the case of major works relating to extensions, structural alterations, or new structures. They shall sanction the purchase of exhibits and approve their prices; sanction the write off of the amounts of losses; sanction the creation of all permanent and temporary posts; make appointments to the higher posts of the Museum staff and grant leave to the officers holding the higher appointments; and punish, suspend, discharge and dismiss these persons.

30. The Chairman may sanction all original works and special and current repairs and approve estimates, and purchase of exhibits, not exceeding Rs. 500 in any one case; sanction expenditure in excess of Rs. 100 up to a limit of Rs. 500 at one time, under any item provided for in the Budget; sanction the write off of the amounts of losses up to a limit of Rs. 100 in any one case; sanction the appointment of permanent and temporary subordinate staff and grant leave to incumbents; and punish, suspend, discharge and dismiss these persons.

31. The Chairman may arrange investments of surplus funds of the Board at his discretion in accordance with rule 7, showing such investments in the monthly statements of accounts to be passed by the Trustees at their meetings.

32. The Heads of Departments, and the Assistant Curator of the Art Section subject to the approval of the Curator of that Section, may sanction expenditure not exceeding Rs. 100 on any one item provided for in the Budget estimates of the Departments; make appointments to the posts of inferior servants and grant leave to the inferior staff; and punish, suspend, discharge and dismiss these persons.

33. The Trustees may make a lump sum permanent advance up to a limit of Rs. 500 to each of the Heads of Departments against the Budget provisions, to meet expenditure under rule 32.

34. The Trustees shall follow *mutatis mutandis* the rules followed by the State Government as they exist from time to time in respect of leave, acting and leave allowances and travelling allowances, subject to any orders of the Trustees of a general or special nature.

35. Every subscriber to the provident fund which may be established by the Board for the benefit of the officers and servants employed by it shall subscribe monthly to such fund at such rate as the Board may prescribe and the Board shall, every year on the 31st day of March, contribute to the account of each subscriber an amount equal to the amount contributed by the subscriber.

THE BOMBAY MEDICAL ACT, 1912 (BOM. VI OF 1912).

G. N., G. D., No. 6775, dated 22nd September 1913.

S. 6.

Amended by G. N., G. D., No. 3903, dated 19th December 1925.

Amended by G. N., G. D., No. 5777, dated 26th June 1926.

Under the provision of section 6 of the Bombay Medical Act, 1912 (Bom. VI of 1912), the Governor in Council is pleased to prescribe the following fees for the entry in the Bombay Medical Register of any additional qualification or qualifications which any registered person may have obtained subsequent to his registration :—

1. For the registration of each additional qualification including a qualification in Public Health, or State, or Tropical Medicine—Rupees five.

Provided that the maximum fee for the registration of any number of additional qualifications at one time shall not exceed rupees fifteen.

2. For the additional registration of a Foreign Medical qualification—Rupees ten.

3. No practitioner whose name has been removed from the Register under section 9 of the Act will be re-registered unless he pays the original registration fee of Rs. 15.

G. N., G. D., No. 6774, dated 22nd September 1913.

S. 16.

Amended by G. N., G. D., No. 2099, dated 16th March 1945.

The following Rules made by the Governor in Council under section 16 of the Bombay Medical Act, 1912 (Bom. VI of 1912), are published for general information :—

1. In these rules, unless there be something repugnant in the subject or context :—

(*a*) The expression "The Act" means the Bombay Medical Act, 1912.

(*b*) The expression "the Council" means "the Bombay Medical Council" established under the Act.

(*c*) The expression "the Registrar" means the Registrar appointed under section 5 of the Act.

2. An account shall be opened in the Bank of Bombay* in the name of the Council and all monies of the Council shall be deposited in the Bank, subject to the reservation mentioned in rule 3.

3. The Registrar shall receive all monies payable to the Council. He shall not retain in his hands a sum of more than Rs. 100, the balance being lodged in the Bank to the credit of the Council.

4. The Registrar shall in the month of July in each year prepare a statement of income and expenditure of the preceding financial year ending 31st March, and draw the attention of the Council to such matters as seem deserving of notice.

5. The annual accounts shall be made up by the Registrar under the direction of the Executive Committee.

6. In the month of September in each year, an estimate of the revenue and of the expenditure of the Council for the year commencing on 1st April then next ensuing, shall be laid before the Council.

**Note.*—Now known as the Imperial Bank of India, Bombay.

7. Such estimate shall make provision for the fulfilment of the liabilities of the Council and for effectually carrying out its objects. It shall include on its revenue side, besides all revenue ordinarily anticipated, such grant as the State Government may be pleased to allot and all fees received from registration and other sources.

8. The Council shall consider the estimate so submitted to it and shall sanction the same either unaltered or subject to such alteration as shall be deemed fit.

9. The Council may at any time during the year for which any estimate has been sanctioned cause a supplementary estimate to be prepared and submitted to it. Every such supplementary estimate shall be considered and sanctioned by the Council in the same manner as if it were an original annual estimate. No expenditure shall be incurred by the Council which is not duly provided for in the budget or in a supplementary budget estimate.

10. A bill or other vouchers presented as a claim for money shall be received and examined by the Registrar. If the claim be for a sum not exceeding Rs. 10 and the bill is in order, he shall pay it. If the claim be for a sum exceeding Rs. 10 but not exceeding Rs. 100 payment shall be made after the claim is sanctioned by the President. If the claim be for a sum exceeding Rs. 100, payment shall not be made until it has been examined and passed by the Executive Committee.

11. The Registrar shall immediately bring into account in the General Cash-Book all monies received or spent by the Council.

12. All Cheques on the Bank shall be signed by any one member of the Executive Committee and by the Registrar.

S. 19 (2)

G. N., G. D., No. 6773, dated 22nd September 1913.

Amended by G. N., G. D., No. 817, dated 18th October 1921.
Amended by G. N., G. D., No. 2099, dated 31st March 1922.
Amended by G. N., G. D., No. 817, dated 18th April 1922.
Amended by G. N., G. D., No. 3903, dated 16th May 1923.
Amended by G. N., G. D., No. 2099, dated 11th March 1924.
Amended by G. N., G. D., No. 817, dated 25th March 1925.
Amended by G. N., G. D., No. 2099, dated 19th October 1928.
Amended by G. N., G. D., No. 2099B, dated 12th November 1929.
Amended by G. N., G. D., No. 2099, dated 14th May 1934.
Amended by G. N., G. D., No. 2099, dated 19th November 1936.
Amended by G. N., G. D., No. 2107/33, dated 15th November 1938.
Amended by G. N., G. D., No. 817, dated 14th October 1939.
Amended by G. N., G. D., No. 2099, dated 3rd January 1940.
Amended by G. N., G. D., No. 2099, dated 15th April 1941.
Amended by G. N., G. D., No. 2099, dated 21st April 1942.
Amended by G. N., G. D., No. 2099, dated 31st December 1942.
Amended by G. N., G. D., No. 2099, dated 29th April 1943.
Amended by G. N., G. D., No. 2099, dated 9th June 1944.
Amended by G. N., G. D., No. 2099, dated 9th October 1945.
Amended by G. N., G. D., No. 2099, dated 19th November 1945.
Amended by G. N., H. & L. G. D., No. 2099, dated 6th June 1947.
Amended by G. N., H. & L. G. D., No. 9189, dated 6th June 1947.
Amended by G. N., H. & L. G. D., No. 2099, dated 26th November 1949.

The following Rules made by the Bombay Medical Council, having been approved by the Governor in Council, are published, as required by sub-section (2) of section 19 of the Bombay Medical Act, 1912 (Bom. VI of 1912) :—

In these rules, unless there be something repugnant in the subject or context—

(*a*) The expression "the Act" means the Bombay Medical Act, 1912.

(*b*) The expression "the Council" means the Bombay Medical Council" established under the Act.

(*c*) The expression "the Registrar" means the Registrar appointed under section 5 of the Act.

I.—MEETINGS OF THE COUNCIL.

1. The COUNCIL shall ordinarily meet for the transaction of business on the first Monday in the months of February and September in each year.

2. An extraordinary meeting of the COUNCIL, of which 15 days' notice shall be given, may be summoned by the PRESIDENT at any time, and shall be summoned by him on a written requisition signed by not less than seven members of the COUNCIL.

3. All meetings of the Council shall be summoned by the Registrar by letter addressed to each member stating the time and place of meeting.

4. The summons convening any meeting shall declare the purpose of the meeting, whether for *General* Bussinss or for any (named) *Special* Business, and, at any meeting which is for *Special* Business, no business shall be entered on further than such as has been named in the summons, unless the COUNCIL, by resolution agree to consider such business.

5. Previously to any meeting of the COUNCIL, the REGISTRAR shall, with the PRESIDENT, prepare a *Provisional Programme of Business*, and shall furnish a copy thereof to each member of the COUNCIL, not less than ten days before the day of meeting and at the same time forward to all members of the COUNCIL copies of the documents and evidence in any penal cases to be brought before the COUNCIL during that Session.

6. Any Notice of Motion to be inserted in the *Programme of Business* for the first day of the Session must be sent to the REGISTRAR at least fifteen clear days before the beginning of the Session.

II.—APPOINTMENT OF MEMBERS OF THE COUNCIL.

7. A book shall be kept, containing the names of the members of the COUNCIL, the Electorates they represent, the date of appointment of each member, the term for which he was appointed, and the date of the death or retirement of each member ; and such book shall be regularly kept up, so as to show the period at which each of the Bodies that has power to appoint should proceed to a new appointment ; and the same particulars shall also be observed with regard to members appointed by the State Government.

8. Sixty days before the expiration of the term of any existing appointment, the REGISTRAR shall draw the attention of the President and of the Appointing Authority to the vacancy that will arise, in order that such new appointment may be made to take effect from the day on which the corresponding old appointment will expire.

9. On the resignation, death, or lapse of appointment of any member of the COUNCIL, the REGISTRAR shall draw the attention of the PRESIDENT, and of the Appointing Authority to the vacancy thus caused in order that the same may be filled up.

III.—FORMS TO BE OBSERVED FOR FILLING VACANCIES IN THE COUNCIL.

10. In the case of nominated members, the PRESIDENT shall inform the State Government of the vacancy, requesting them to fill the same.

11. In the case of elected members, the President or any other person authorised by him in this behalf shall be the Returning Officer; and such Returning Officer shall some time not less than forty-two days, nor more than sixty days, before the day on which the term of office of such member will expire, and as soon as conveniently may be, after the occurrence of any vacancy arising from the death or resignation of such member, issue his precept to the electorate concerned, requiring the said electorate to elect a member or members by a date mentioned in the precept.

12. The following shall be the procedure adopted for filling up vacancies by the electorates :—

(1) The Electoral Roll shall be prepared by the REGISTRAR from the Register, and shall contain the name, qualifications and address of every person qualified to vote for the election of a member to fill up the vacancy or vacancies. Any person who is qualified for election to the COUNCIL under section 2 (2) of the Act may be nominated as a candidate for election either under sub-section (*c*) or under sub-section (*d*) of section 2 (2) of the Act.

(2) Candidates qualified for election must be proposed and seconded by persons qualified as electors; no elector shall propose or second the nomination of more persons than are required to fill up the vacancy or vacancies. Provided also that if more nominations than are required to fill up a vacancy or vacancies be subscribed by the same elector, all nominations subscribed by him shall be held to be void.

(2) (*a*) The candidate shall sign the nomination paper declaring that he is willing to serve on the Council, if elected, failing which the nomination paper shall be invalid.

(3) Every proposal for nomination must be in writing, and must be signed by the proposer and seconder, and sent by post or otherwise, so as to reach the Returning Officer not less than forty days before such date as may be appointed by the COUNCIL in this behalf.

(3) (*a*) Any candidate shall be at liberty to withdraw his candidature within seven days of his nomination.

(4) If in any case of election the number of candidates duly nominated does not exceed the number required to fill up the vacancy or vacancies, the Returning Officer shall forthwith declare such candidates to be elected.

(5) If more candidates than are necessary to fill up the vacancy or vacancies be nominated, the Returning Officer shall forthwith publish their names and addresses in the *Bombay Government Gazette* and otherwise as the COUNCIL shall deem fit, and shall further cause their names to be entered in voting papers in the Form as laid down in the Appendix to this rule.

(6) Twenty-one days before such date as may be appointed by the Council in the behalf, the Returning Officer shall send by post to each elector one such voting paper signed by the Returning Officer, a smaller blank cover with the words "Voting Paper" printed thereon, and a bigger cover on which are printed on the left top corner the serial alphabetical number, and the name and signature columns at the lower left corner and the address of the Returning Officer on the said bigger cover, printed as under :—

"To

The Returning Officer,

C/o Bombay Medical Council Office, Bombay 1."

(6) (*a*) An elector who has not received his voting and other connected papers sent by post or whose papers, before they are despatched back to the Returning Officer have been inadvertently spoiled in such manner that they cannot be conveniently used or who has lost his papers, may, on his transmitting to the Returning Officer a declaration to that effect signed by himself, require the Returning Officer to send him duplicate papers in place of those not received, spoilt or lost; and if the papers have been spoilt, the spoilt papers shall be returned to the Returning Officer who shall cancel them on receipt. In every case when duplicate papers are issued, a record thereof shall be kept by the Returning Officer and a mark "Duplicate" shall be placed on the bigger cover, which will bear the same serial alphabetical number as was originally given to the said elector. The voting paper issued in such cases shall also be marked "Duplicate".

(7) Before the date appointed by the Council in this behalf every elector, desirous of voting, shall send his voting paper to the Returning Officer, and the Returning Officer shall keep the same collected in sealed boxes.

(7) (*a*) The President shall nominate as scrutineers such number of members of the Council not exceeding four, as he thinks fit.

(8) The Returning Officer shall attend for the purpose of counting the votes on such date and at such time and place as may be appointed by the PRESIDENT in this behalf. Any candidate may be present in person or by an accredited representative at the counting of the votes.

(9) When the counting of the votes has been completed, the Returning Officer shall forthwith declare the candidates to whom the largest numbers of votes have been given, to be elected and shall forthwith inform the successful candidate by letter of his being elected to the Council. If any candidate thus shown to be elected has withdrawn from the election, or refuses to accept election, that one of the remaining candidates to whom the next largest number of votes has been given shall be held to have been elected in the place of the withdrawing candidate, and so on for as many of the remaining candidates as there may be vacancies caused in this way.

(10) When an equality of votes is found to exist between any candidates, and the addition of a vote will entitle any of the candidate to be declared elected, the determination of the person to whom such one additional vote shall be deemed to have been given shall be made by lot, to be drawn by the Returning Officer, and in such manner as the PRESIDENT or the person authorised by him in this behalf may determine.

(11) Upon the completion of the counting and after the result has been declared by him, the Returning Officer shall seal up the voting papers and all other documents relating to the election and shall retain the same for a period of six months, and thereafter cause them to be destroyed.

(12) The Returning Officer shall inform the PRESIDENT of the result of the election.

(13) The COUNCIL shall appoint, and shall notify in the *Bombay Government Gazette* and in such other manner as it thinks fit, such suitable time and place for each of the following proceedings, namely:

(*a*) receiving of nomination papers under rule 12 (3);

(*b*) the sending of voting papers under rule 12 (6);

(*c*) the last day for receiving voting papers and the day for the counting of the votes under rule 12 (7).

(14) The COUNCIL may, of its own motion, or on objection made, declare any election, that has been held, to be void on account of corrupt practice or any other sufficient cause and may call on the electorate to make a fresh election. The decision of the COUNCIL under this rule shall be final.

(15) The decision of the COUNCIL on any question that may arise as to the intention, construction, or application of these rules shall be final.

APPENDIX.

Form

[*See* Rule 12 (5).]

Voting Paper.

....Members are to be elected to the MEDICAL COUNCIL by the persons entered in the electoral roll.

Serial No.	Names of candidates duly nominated.	Vote.

Returning Officer.

Instructions.

(1) Each elector has votes.

(2) He shall vote by placing the mark × opposite the names of the candidates whom he prefers.

(3) The voting paper shall be invalid if the mark × is placed opposite the names of more than....candidates, or if the marks are so placed as to render it doubtful to which candidates they are intended to apply.

(4) The elector shall enclose the voting paper, duly filled in, in the smaller cover and enclose this in the bigger cover, supplied by the Returning Officer, and shall write his full name (which may be typewritten) and signature in the left hand corner of the bigger envelope in the printed columns therefor. If the elector fails so to write his full name and signature, the voting paper shall be invalid.

(5) Every elector shall send his voting paper in a separate cover direct to the Returning Officer.

(6) If the Returning Officer receives more than one voting paper from any elector, all such voting papers shall be invalid.

(7) If more than one mark is placed before the name of any candidate the whole voting paper will be disqualified.

13. On receipt of official notice of the election of a member, the PRESIDENT shall inform the State Government of the same for publication in the *Bombay Government Gazette*. The notification of the election of a member shall be read by the REGISTRAR and he shall then be introduced to the meeting by some member of the COUNCIL. The above procedure shall be adopted also in the case of nominated members.

IV.—ORDER OF BUSINESS OF THE COUNCIL.

14. When the PRESIDENT has taken the Chair the roll shall be called, and any member not present before the *Minutes* of the previous meeting are confirmed shall be deemed absent.

15. No member, after taking his place, shall leave the meeting without permission from the PRESIDENT.

16. The PRESIDENT shall be a Member of all Committees of the COUNCIL.

17. Before the commencement of any meeting of the COUNCIL, the PRESIDENT in consultation with the REGISTRAR shall prepare the *Programme of Business* containing the subjects to be brought forward and the notices of motion given by members and this programme shall be prepared and distributed to all members of the COUNCIL as required.

18. All Motions and Amendments shall be in writing, shall be signed by the Mover and Seconder, and, before they are spoken to by other members, shall be read from the Chair or by the REGISTRAR under the authority of the Chair. All formal Amendments shall be framed so that they may be read as independent Motions.

18(*a*) The mover shall have the right of speech before any motion or amendment is seconded.

19. Any Motion standing over from the previous day shall take precedence of new matter, unless the COUNCIL otherwise determine.

20. No Motion or Amendment shall be withdrawn after having been read from the Chair or by the authority of the Chair, unless by permission of the COUNCIL.

21. The Seconder of a Motion may reserve his speech to any period of the Debate; but only the Proposer has the right of final reply.

22. If an Amendment be proposed, it shall be disposed of before any other Amendment is moved.

23. The Amendment shall first be put to the vote; and if it be negatived, a second Amendment may be moved, and shall be disposed of in the same way as the first Amendment; and so on, until no further Amendment is proposed.

24. Should every Amendment be negatived, the original Motion shall then be put to the vote.

25. If any Amendment be carried, the original Motion so amended shall be regarded as a substantive Motion, to which further Amendments may be moved.

26. In all cases where a division has taken place, any member of the COUNCIL may require that the names or the numbers or both the names and the numbers, of the majority, of the minority, of those who decline to vote, and of those who are absent, be entered in the *Minutes*.

27. When a Motion is under debate, no further proposal shall be received except one of the following:—

(*i*) An Amendment, namely, "That the motion, be amended as follows....."

(*ii*) The postponement of the question, namely, "That the consideration of the Motion be postponed."

(*iii*) The adjournment of the debate, namely, "That the debate on the Motion be now adjourned."

(*iv*) The adjournment of the COUNCIL, namely, "That the COUNCIL do now adjourn."

(*v*) The Closure of the debate, namely, " That the COUNCIL do now proceed to vote on the Motion. "

(*vi*) The Previous Question as to the Motion, namely, " That the COUNCIL, instead of proceeding to deal with the Motion, do pass to the next item on the *Programme of Business.*"

28. When an Amendment is under debate, no further proposal shall be received except one of the following :—

(*i*) The adjournment of the debate on the Amendment, namely, " That the debate on the Amendment be now adjourned. "

(*ii*) The adjournment of the COUNCIL, namely, " That the COUNCIL do now adjourn. "

(*iii*) The Closure of the debate on the Amendment, namely, " That the COUNCIL do now proceed to vote on the Amendment. "

(*iv*) The Previous Question as to the Amendment, namely, " That the COUNCIL instead of proceeding to deal with the Amendment, do resume the debate on the Motion originally proposed. "

29. The proposal for the Postponement of the question may specify a date for the further consideration of the question, or be made *sine die.*

30. If the proposal for the Adjournment of the debate be carried, the COUNCIL shall pass to the next item on the *Programme of Business,* and the debate shall be resumed at the next ordinary meeting of the COUNCIL. The proposer of the Adjournment shall, on the resumption of the debate, be entitled to speak first.

31. If the proposal for the Adjournment of the COUNCIL be carried, the question under debate shall be dropped from the *Programme of Business.*

32. On the proposal for the Adjournment of the COUNCIL being made and seconded, it shall be competent for the PRESIDENT OR CHAIRMAN, before putting the question, to take the opinion of the COUNCIL as to whether it will, before rising, proceed to the transaction of unopposed business.

33. The proposal for the Closure shall be made and seconded without debate, and shall, unless the PRESIDENT or CHAIRMAN shall rule otherwise, be put forthwith. Should the proposal be carried, the Motion or Amendment under debate shall be at once voted on by the COUNCIL.

34. The proposal for the Previous Question shall be made and seconded without debate, and shall be put forthwith. Should the proposal be carried, the Motion or Amendment to which it applies shall be dropped from the *ramem Progof Business.*

34(*a*). The President may at his discretion obtain the votes of members of the Council on any particular question by Circular, after having placed before them all the facts and information relating to the same and obtaining their views thereon, such question being decided by a majority of votes and a minute regarding it being added to the minutes of the Council.

V.—MINUTES OF THE COUNCIL.

35. The *Minutes* of each meeting shall be read at the following meeting for the approval of the members and shall be confirmed by the President after a resolution to that effect passed thereat.

36. The public proceedings of the meetings of the Council shall be preserved in the form of printed *Minutes* after confirmation by the signature of the President.

The printed minutes shall contain—

(*a*) the agenda,

(*b*) the papers connected with the cases of enquiries under section 9,

(*c*) in respect of items other than those mentioned in (*b*) above,—

(*i*) the Registrar's Note,

(*ii*) the decision of the Executive Committee and

(*iii*) the Council on each item.

37. The *Minutes* of each Meeting shall contain such Motions and Amendments as have been proposed and adopted, or negatived, with the names of the Proposer and Seconder, but without any comment or observation of Members annexed thereto.

38. When a new or amended *Regulation* is adopted by the COUNCIL a formal statement shall be placed on the Minutes as to the effect of the new or amended *Regulation* upon previous *Regulations* on the same subject.

39. After the close of any Session of the COUNCIL, a printed copy of the confirmed *Minutes* of such Session shall be sent to each member.

40. The *Minutes* of the meetings of the Executive Committee shall be printed uniformly with those of the Council and copies thereof sent to each member of the Council.

The minutes shall contain—

(*a*) the agenda,

(*b*) the Registrar's note, and

(*c*) the decision of the Committee on each of the items on the agenda.

41. The full *Minutes* of the Council after final revision in accordance with rule 36, shall be kept in order that, as soon as convenient after the Sessions, they may be made up in sheets and consecutively paged for insertion in the yearly volume.

VI.—EXECUTIVE COMMITTEE.

42. The EXECUTIVE COMMITTEE shall consit of the PRESIDENT and six members of the COUNCIL elected by ballot at the first meeting of the COUNCIL and the Executive Committeee so elected will hold office for one year.

43. The EXECUTIVE COMMITTEE shall ordinarily meet once every month on such dates as may be fixed by the PRESIDENT.

44. For a Meeting of the EXECUTIVE COMMITTEE four members including the PRESIDENT or CHAIRMAN shall be a quorum.

45. Should there occur, during the recess, any vacancy in the EXECUTIVE COMMITTEE they shall be empowered to fill up such vacancy, except in cases where a summons has been issued for a meeting of the COUNCIL when the COUNCIL itself shall elect.

Should any member of the EXECUTIVE COMMITTEE be absent from two consecutive meetings without leave of the Committee he shall *ipso facto* cease to be a member of the Committee. If the period of leave exceeds three months, a vacancy is thereby created.

46. The EXECUTIVE COMMITTEE shall keep Minutes of their proceedings which shall be dealt with according to the same procedure as that indicated in rule 36, for the Minutes of the Council.

47. In case of the death of the REGISTRAR, or his incapacity from illness, when the COUNCIL is not in Session, the EXECUTIVE COMMITTEE shall appoint a person to perform temporarily the duties of REGISTRAR.

48. The EXECUTIVE COMMITTEE shall superintend the publication of the Medical Register which shall be prepared by the Registrar who shall cause it to be printed after entering therein annually a statement of the distribution of the copies of the Register to Government Officers as approved by the State Government and to others as may be directed by the EXECUTIVE COMMITTEE.

49. The EXECUTIVE COMMITTEE shall order each year such number of copies of the Medical Register to be printed as may seem to the Registrar to be required on a revision of the annual distribution list.

50. The EXECUTIVE COMMITTEE shall consider and prepare Reports upon any subjects, that may seem to require the attention of the COUNCIL, and such Reports shall be printed and circulated among the members of the COUNCIL ten days at least before the meeting of the COUNCIL.

51. The EXECUTIVE COMMITTEE shall, before each meeting of the COUNCIL, prepare the business for the consideration of the COUNCIL.

52. The EXECUTIVE COMMITTEE shall be authorised to apply to the Medical Licensing Bodies for such information as may be necessary for the due execution by the Committee of such business as may be delegated to them.

53. The Returns of Professional Examinations and their Results shall be confided to the care of the EXECUTIVE COMMITTEE, who shall prepare annually a Table of Results of such Examinations, to be laid before the COUNCIL.

54. The printing of the volumes of *Minutes* shall be under the direction of the EXECUTIVE COMMITTEE.

55. [*Deleted.*]

56. All petitions presented to the COUNCIL shall be referred to the EXECUTIVE COMMITTEE to be examined and reported upon before being considered by the COUNCIL.

57. Subject to the provisions of the preceding rule, all petitions addressed to the COUNCIL immediately before or during the Session of the COUNCIL shall be laid upon the table.

58. The EXECUTIVE COMMITTEE shall be empowered to inquire into all cases for the purpose of carrying into effect section 20 of the Act, relating to the registration of Diplomas already included or to be included in the schedule of the Act, and shall report to the COUNCIL the result of the opinion arrived at by them.

59. The EXECUTIVE COMMITTEE shall consider and report to the COUNCIL on all matters concerning Preliminary General Education and Examination, the course of Professional Study and Professional Examinations, and with the Visitation of these Examinations; including Study and Examination for Degrees and Diplomas in Public Health and State Medicine.

60. The EXECUTIVE COMMITTEE shall prepare Reports on such subjects as may be indicated to them by the COUNCIL at its sittings, or by the PRESIDENT at other times. The Reports, when finally approved by the Committee, shall be presented to the Council.

VII.—FEES FOR ATTENDING COUNCILS, AND OTHER EXPENSES.

61. For attendance on the COUNCIL, the EXECUTIVE COMMITTEE or Sub-Committee etc., and for travelling expenses therefor, the scale of fees shall be as set forth in the following rules.

62. The rate of payment for attendance on the COUNCIL shall be the same for all members of the COUNCIL.

63. The fees for attendance on the COUNCIL shall be Fifty Rupees a day for each member attending.

64. The travelling expenses of members shall be paid as follows :—

(*i*) Officials should draw the travelling allowance which they are entitled to claim according to their grades under the Fundamental Rules or the Bombay Civil Services Rules as the case may be.

(*ii*) A non-official member should be allowed one first class fare, *plus* one third class fare for a servant, both ways, halting allowance and road mileage according to the rules applicable to first class Government officers. The halting allowance will be admissible for any day on which he is required to halt at a place, which is not the place where his permanent residence is situated, on the business of the Council, or the Committee or Sub-Committee etc. The third class fare for the servant is recoverable only if a certificate to the effect that the servant actually travelled is attached to the travelling allowance bill.

N.B.—In the event of a member actually travelling throughout the 24 hours between midnight and midnight, halting allowance would not be admissible. On the other hand, should he halt for less than 24 hours for a meeting he would be entitled to it.

65. The fees for attendance at meetings of the EXECUTIVE COMMITTEE shall be Thirty Rupees a day, with the usual travelling expenses as under Rule 64.

VIII.—REGISTRATION.

66. Any appeal to the COUNCIL against a refusal of the REGISTRAR to register in the case of first registration, or to alter any entry in the Register, must state the grounds on which registration is claimed and furnish the names of the qualifications and the dates on which they were received. On receipt of such an appeal, the EXECUTIVE COMMITTEE shall conduct an enquiry and submit a report to the COUNCIL.

67. Every person whose name has been entered on the Register shall be entitled to receive from the Registrar a Certificate of Registration on payment of the stamp duty for the time being leviable thereon under the Indian Stamp Act, 1899, or any other law for the time being in force relating to the levy of stamp duty, which certificate shall set forth the full name of the person registered, his address, the date and place of registration, and the qualifications in respect of which he has been registered. Form marked A.

68. No application for a duplicate certificate of Original Registration in the Medical Register shall be entertained, but certified copies of entries in the Medical Register in the following form may be issued to any one on payment of a fee of Rs. 2 together with the proper amount of stamp duty that may for the time being be leviable thereon.

Office of the Bombay Medical Council,
Bombay, 195 .

No.

Certified to be a true copy of the entry in the Bombay Medical Register of the name specified below :—

Name.	Address.	Date of Registration.	Qualifications.

Registrar.

N.B.—This certified copy remains evidence of registration only until the publication of the printed Medical Register for 19 . It is NOT, nor must it be used as EVIDENCE of the IDENTITY of the holder with the person named herein.

68(*a*). A fee of Rs. 5 shall be levied for registering a change of name in the Medical Register.

69. Every application by a Registered Medical Practitioner for the removal of his name at his own request from the *Medical Register*, shall be accompanied by a declaration, to be made by the applicant, that he is not aware of any proceedings or of any reason for the institution of any proceedings which might result in establishing cause for the erasure of his name from the *Medical Register* without his consent, or for depriving him without his consent of any qualification or licence entitling him to be registered.

The application shall further be accompanied by an undertaking by the applicant that he will not apply for registration either in Bombay or in other States in India within a period of two years from the date of the removal of his name, also that he will submit testimonials of two registered practitioners who know him to the effect that he has not committed any act during the period between the removal and application for re-registration which might result in establishing cause for the erasure of his name from the Medical Register without his consent, or in depriving him without his consent of any qualification or licence entitling him to be registered in case he were to apply for registration after that period.

Every such application shall, in the first instance, be referred by the REGISTRAR to the Medical Authorities who granted the applicant his Qualification, or Qualifications to ascertain whether there is any valid objection to such removal.

The REGISTRAR shall bring such application before the next meeting of the COUNCIL or EXECUTIVE COMMITTEE, who will consider the application and any objections thereto, and the PRESIDENT may put from the Chair the question.

Whether the REGISTRAR shall erase the applicant's name from the *Medical Register*.

The REGISTRAR shall, upon the removal of the appllicant's name from the *Register*, send notice of such removal to the applicant by a letter addressed to his registered address.

69(*a*). The Executive Committee shall restore to the *Medical Register*, if it sees fit, the name of any person which may have been erased therefrom under section 6 of the *Act* but no application for the restoration to the *Medical Register* of the name of a person which has been removed under section 6 of the *Act* shall be entertained unless it be accompanied by a declaration made by the applicant setting forth the facts of the case, and stating that he is the person originally registered, and by a certificate from two practitioners registered under the *Acts* as to his identity, or in the case of an applicant residing abroad a certificate signed by two persons, who

shall be magistrates or officers holding a commission in one of Government Services, Civil Naval, or Military, or Justices of the Peace, or two resident practitioners registered under the *Act*. A fee of Rs. 5 shall be levied for the re-registration of practitioners whose names have been removed from the *Register* under section 6 of the Act.

70. In accordance with the provisions of section 6 of the Act, the REGISTRAR shall keep a Register of Medical Practitioners in the form approved by the State Government and he shall enter therein, in alphabetical order, the name of every person who is registered under the Act, together with his address and qualifications, with the date on which each qualification was granted. He shall also enter—on the payment of such fees as may be prescribed by the State Government—any additional qualifications which any registered person may have obtained.

71. Each page of this *Register* shall be verified by the REGISTRAR's signature.

72. The REGISTRAR shall as early as possible in each year, cause to be printed and published, in the same form as the Medical Register itself, a correct List of all persons whose names appear in the Register on the 31st December preceding. The REGISTRAR shall keep an interleaved copy of such printed List wherein he shall make, during the year, any entry, alteration or erasure that may be necessary.

A.

MEDICAL REGISTRATION-CERTIFICATE.

Re. 1-0-0
Stamp.

BOMBAY MEDICAL COUNCIL OFFICE:
19 .

[*Certificate-number* .]

I hereby certify that the following is a true copy of the entry in the Medical Register of the name specified below :—

Name.	Address.	Date of Registration.	Qualifications.

Note.—This certified copy remains evidence of Registration ONLY until the PUBLICATION of the Printed Medical Register for 19 .

REGISTRAR.

Seal.

IMPORTANT NOTICE.

Every Registered Medical Practitioner should be careful to send the REGISTRAR immediate Notice of any change in his Address, and also to answer all inquiries that may be sent to him by the REGISTRAR in regard thereto, in order that his correct Address may be duly inserted in the MEDICAL REGISTER: otherwise, by section 6 of the BOMBAY MEDICAL ACT, 1912, such Practitioner is liable to have his name erased from the MEDICAL REGISTER.

* * * * * * * *

73. There shall be made, every year, and entered in the printed *Medical Register*, an enumeration of (1) the total number of persons in the published *Register*; (2) the number of persons added by registration during the year; (3) the number restored to the Register; (4) the number erased from the *Register*, stating the section of the Act under which the name had been erased; and (5) the number removed by death.

IX.—PENAL REMOVALS FROM THE *Medical Register*.

74. Whenever information reaches the Office of the COUNCIL that a Registered Medical Practitioner has been convicted of a cognizable offence as defined by section 9 of the Act, or has been under the censure of any judicial or other competent authority in relation to his professional character, or has been guilty of conduct which *prima facie* constitutes infamous conduct in a professional respect, the REGISTRAR shall make an abstract of such information and shall submit the same to the PRESIDENT.

75. Where the information in question is in the nature of a complaint by a person or body charging the Practitioner with infamous conduct in a professional respect, such complaint shall be made in writing addressed to the REGISTRAR, and shall state the grounds of complaint and shall be accompanied by one or more declarations as to the facts of the case.

76. Every declaration must state the description and true place of abode of the declarant, and where a fact stated in a declaration is not within the personal knowledge of the declarant the source of the information and grounds for the belief of the declarant in its truth must be accurately and fully stated. Declarations and parts of declarations which are made in contravention of this Rule will not be accepted as evidence.

77. The abstract and, where a complaint has been lodged, the complaint and all other documents bearing on the case, shall be submitted by the REGISTRAR to the PRESIDENT, who shall, if he thinks fit, instruct the REGISTRAR to ask the Practitioner by means of a registered letter for any explanation he may have to offer. The documents, including any explanation forwarded by the Practitioner to the REGISTRAR, shall then be referred to the EXECUTIVE COMMITTEE, who shall consider the same, and shall have power to cause further investigation to be made and further evidence to be taken, and to refer if necessary to a SOLICITOR for his advice and assistance, and to instruct him to take the opinion of COUNSEL and otherwise to obtain such advice and assistance as they shall think fit. If the COMMITTEE are of opinion that a *prima facie* case is not made out, the case shall not proceed further, and the REGISTRAR shall inform the complainant of the *Resolution* of the COMMITTEE. If the Committee is of opinion that the circumstances suggest that a letter of warning be sent, the Committee is empowered to send it. If the COMMITTEE resolve that the case is one in which an inquiry ought to be held, the PRESIDENT shall direct the REGISTRAR to take steps for the institution of an inquiry, and for having the case heard and determined by the COUNCIL.

78. An inquiry with a view to the removal of a name from the *Register* under Section 9 shall be insti uted by the issue of a notice in writing, on behalf of the COUNCIL, by the REGISTRAR addressed to the Practitioner. Such notice shall specify the nature and particulars of the charge, and shall inform him of the day on which the COUNCIL intend to deal with the case, and shall call upon the Practitioner to answer the charge in writing and to attend before the COUNCIL on such day. The notice shall be in the Form given in the *Appendix* to Chapter IX, with such variations, as circumstances may require, and shall be sent three weeks before the date of inquiry, and shall be accompanied by a print of section 9 of the *Act* and of the following rule.

79. In every case in which the EXECUT VE COMMITTEE resolve that an inquiry shall be instituted and a notice for an inquiry is issued accordingly, either party shall, for the purpose of his defence or reply as the case may be, and upon request in writing for that purpose signed by himself or his Solicitor, be entitled to be supplied by the REGISTRAR with a copy of any declaration, explanation, answer, or other document given or sent to the COUNCIL by or on behalf of the other party, which such other party will be entitled on proper proof to use at the hearing as evidence in support of or in answer to the charge specified in the notice of inquiry; and every notice of inquiry shall draw the particular attention of the Practitioner to this Rule.

80. Any answer, evidence, or statement forwarded, or application made, by the Practitioner between the date of the issue of the notice and the day named for the hearing of the charge, shall be dealt with by the PRESIDENT in such manner as he, under legal advice, shall think fit.

81. All material documents which are to be laid before the COUNCIL as evidence in regard to the case shall be printed, and a copy shall be furnished to each member of the COUNCIL before the hearing of the case.

82. At the hearing of the case by the COUNCIL, their SOLICITOR may be present to advise as to the conduct of the ca e and a COUNSEL employed by them may act as JUDICIAL ASSESSOR. The complainant and also the Practitioner may be represented or assisted by a Solicitor with or without Counsel.

83. Where a complainant appears personally or by Counsel or Solicitor, the following will be the order of procedure :—

(1) The REGISTRAR to the COUNCIL will read to the COUNCIL the notice of the inquiry addressed to the Practitioner.

(2) The complainant will then be invited to state his case by himself or his legal Representative, and to produce his proofs in support of it. At the conclusion of the complainant's proofs his case will be closed.

(3) The Practitioner will then be invited to state his case by himself or by his legal Representative, and to produce his proofs in support of it. He may address the COUNCIL either before or at the conclusion of his proofs, but only once.

(4) At the conclusion of the Practitioner's case the COUNCIL will, if the Practitioner has produced evidence, hear the complainant in reply on the case generally but will hear no further evidence except in any special case in which the COUNCIL may think it right to receive such further evidence. If the Practitioner produces no evidence the complainant will not be heard in reply except by special leave of the COUNCIL.

(5) Where a witness is produced by any party before the COUNCIL, he will be first examined by the party producing him, and then cross-examined by the adverse party, and then re-examined by the party producing him. The COUNCIL reserves to itself the right to decline to admit in evidence any declaration where the declarant is not present for or declines to submit to cross-examination.

(6) The PRESIDENT and the JUDICIAL ASSESSOR, when present, may put questions to any witness ; and members of the COUNCIL, through the PRESIDENT, may also put questions to any witness.

84. Where there is no complainant or no complainant appears, the following will be the order of procedure :—

(1) The REGISTRAR to the COUNCIL will read to the COUNCIL the notice of inquiry addressed to the Practitioner, and will state the facts of the case and produce before she COUNCIL the evidence by which it is supported.

(2) The Practitioner will then be invited to state his case by himself or by his legal Representative, and to produce his proofs in support of it. He may address the COUNCIL either before or at the conclusion of his proofs, but only once.

(3) The SOLICITOR to the COUNCIL may be heard in reply if the COUNCIL so desire.

85. Upon the conclusion of the case, the COUNCIL will deliberate thereon in private, and at the conclusion of the deliberations the PRESIDENT shall, for the purpose of summing up the result of the deliberations call upon the COUNCIL to vote on such of the following *Resolutions* to be put from the CHAIR as may be applicable to the circumstances of the case :—

(1) In the case of a Practitioner who has been convicted of a felony, misdemeanour, crime or offence—

That———has been proved to have been convicted of a cognizable offence as defined in the Code of Criminal Procedure, 1898, alleged against him in the notice of inquiry.

(2) In the case of a Practitioner charged with infamous conduct in a professional respect—

(*a*) *That the Council do now proceed to decide whether the facts alleged against ———in the notice of inquiry have been proved or have not been proved.*

If this *Resolution* is not carried, the further hearing of the case will stand adjourned till the next or some other future Session of the COUNCIL as the COUNCIL shall direct, and the hearing thereof will be taken at such next or other future Session as an adjourned case.

If this *Resolution* is carried, the COUNCIL shall be called upon by the PRESIDENT to vote on the following *Resolution* to be put from the *Chair* :—

(*b*) *That the facts* [*or the following facts* (specifying them)] *alleged against——— in the notice of inquiry have been proved to the satisfaction of the Council.*

If this *Resolution* is carried, the COUNCIL may either proceed to judge whether, on the facts proved, the accused Practitioner has been guilty of infamous conduct in a professional respect and to direct the REGISTRAR to erase his name from the *Medical Register* or may postpone its judgment and adjourn the case until the next or some other future Session.

(3) In the case of a Practitioner convicted of a felony (or misdemeanour or crime or offence), or charged with infamous conduct in a professional respect for the purpose of deciding whether or not the judgment of the COUNCIL on the conviction (or fact) proved shall be postponed, the COUNCIL shall be called upon by the PRESIDENT to vote on the following *Resolution* to be put from the *Chair* :—

(c) *That the Council do now proceed to pronounce its judgment on the conviction (or facts) proved against*—

If this *Resolution* is not carried, the judgment of the COUNCIL will stand postponed till the next or some other future Session of the COUNCIL as the COUNCIL shall direct, and the case will be taken at such next or other future Session as a case in which judgment has been postponed.

If this *Resolution* is carried the COUNCIL shall proceed at once to pronounce its judgment on the case, and shall be called upon by the PRESIDENT to vote upon the following *Resolution* to be put from the *Chair* :—

In the case of a conviction :—

(d) *That—having been proved to have been convicted of the felony* (or *misdemeanour* or *crime* or *offence*) *alleged against him in the notice of inquiry, the Registrar be directed to erase his name from the* Medical Register.

In the case of a Practitioner charged with infamous conduct in a professional respect :—

(e) *That the Council donow judge——to have been guilty of infamous conduct in a professional respect, and do direct the Registrar to erase from the* Medical Register *the name of*—

If *Resolution* (d) or (e), as the case may be, is not carried, the PRESIDENT may announce the judgment of the COUNCIL in the form—

That the Council does not see fit to direct the Registrar to erase from the Medical Register *the name* of—.

86. In the event of an adjournment of the hearing, or of a postponement of judgment, to another Session, the COUNCIL, on the case coming on again for consideration, may hear the Practitioner and the complainant (if any), and receive such further evidence in relation to the charge, and in relation to the conduct of the accused Practitioner subsequent to hearing of the charge by the COUNCIL as it shall think fit.

Notice in writing shall be given by the REGISTRAR of the COUNCIL, to the Practitioner, and to the complainant (if any), of the day fixed for the further consideration, and shall request the attendance of the Practitioner on that day before the COUNCIL, and the complainant and the Practitioner shall each be requested to furnish to the REGISTRAR, in writing, not less than fifteen days before the day so fixed, a statement in writing of any further facts or evidence which he may desire to be laid before the COUNCIL. The notice shall be given so as to allow at least twenty-eight days between the day on which the notice is given and the day appointed for the further consideration. No further facts or evidence presented by a party to the inquiry shall be received or considered by the COUNCIL, unless a statement thereof has been previously furnished to the REGISTRAR in compliance with this rule.

87. On the case coming on before the COUNCIL for further consideration, the SOLICITOR if present, or the Reigstrar when the Solicitor is not present shall, if necessary, state the facts and explain the position of the case to the COUNCIL. The Practitoner shall then be invited to address the COUNCIL, either personally or by

his legal Representative, and lay before the COUNCIL any further facts or evidence of which he may have duly given notice to the REGISTRAR; and the complainant (if any) shall then be invited to address the COUNCIL, either personally or by his legal Representative and lay before the COUNCIL, any further evidence of which he shall have duly given such notice.

At the conclusion of the further hearing, the COUNCIL shall deliberate on the case in private; and at the conclusion of the deliberation the PRESIDENT shall call upon the COUNCIL to vote in an adjourned case on the same resolutions as at the original hearing, and in a case in which judgment was postponed on *Resolutions* (*c*) and (*d*) or (*c*) and (*e*) in Rule 86, as the case may be.

88. When the COUNCIL has received notice from a Licensing Body that any Qualification has been duly and legally withdrawn from a Registered Medical Practioner by such Body, provided that the Qualification has not been withdrawn on the ground of the adoption of any theory of Medicine or Surgery, then the COUNCIL shall, if it thinks fit, by formal *Resolution* put by the PRESIDENT from the *Chair*, direct the REGISTRAR to remove such Qualification or Qualifications from the *Medical Register* as appertain to such medical practitioner.

89. If, under the direction of the COUNCIL, all the Qualifications of any Registered Medical Practitioner have been erased from the *Medical Register*, then the COUNCIL shall, if it thinks fit, by formal *Resolution* put by the PRESIDENT from the CHAIR, direct the REGISTRAR to remove the name of such Practitioner from the *Medical Register*.

90. The REGISTRAR shall upon the removal of any name from the *Register*, pursuant to the provisions of the preceding *Clausses*, or of section 9 of the *Act*, forthwith send notice of such removal to the Practitioner, and such notice shall be sent by a registered letter addressed to the last known adreess, or to the registered address of the Practitoner. The REGISTRAR shall also send, forthwith, intimation of any such removal to the Dean or Secretary or other proper officer of any Body or Bodies from which the Practitioner had received his Qualification or Qualifications.

91. The REGISTRAR shall, within one month after any names have been removed from the *Medical Register* by order of the COUNCIL under section 9 of the *Act*, send to the Bodies concerned a list of all such names, and shall call the attention of each Licensing Body to the following Rule of the COUNCIL:—

"The COUNCIL recommends that no person whose name has been once removed from, and has not been restored to, the *Medical Register* shall, without previous reference to the MEDICAL COUNCIL, be admitted to examination for any new Qualification which is registrable in the *Medical Register*."

APPENDIX TO CHAPTER IX.

NOTICE TO A REGISTERED PRACTITIONER TO ATTEND PROCEEDINGS FOR REMOVAL OF HIS NAME FROM THE *Medical Register*, UNDER SECTION 9 OF THE *Bombay Medical Act*, 1912.

SIR,—On behalf of the MEDICAL COUNCIL I give you notice that information and evidence have been laid before the COUNCIL by which the complainants make the following charge against you, namely: [*Here set out the circumstances briefly*] and that in relation thereto you have been guilty of infamous conduct in a professional respect.

Or that you were, on the day of convicted of the following [offence] at namely: [*Set out particulars of the conviction*].

And I am directed further to give notice that on the day of 19 , a meeting of the MEDICAL COUNCIL will be held at at o'clock in the to consider the abovementioned charges against you, and decide whether or not they should direct your name to be removed from the *Medical Register*, pursuant to section 9 of the *Bombay Medical Act, 1912*. You are invited and required to answer in writing the above charges, and to attend before the MEDICAL COUNCIL at the abovenamed place and time, to establish any denial or defence that you may have to make to the abovementioned charges, and you are hereby informed that if you do not attend as required, the MEDICAL COUNCIL may proceed to hear and decide upon the said charges in your absence.

Any answer or other communication or application which you may desire to make respecting the said charges, or your defence thereto, must be addressed to the REGISTRAR of the MEDICAL COUNCIL, and transmitted so as to reach him not less than days before the day appointed for the hearing of the case.

A copy of the 9th section of the *Bombay Medical Act, 1912*, and of certain Rules of the MEDICAL COUNCIL, to which your particular attention is invited, is enclosed herewith for your information.

(Signed)

Registrar.

X.—RESTORATION OF A NAME TO THE *Medical Register*.

92. Applications for restoration to the *Medical Register* of a name removed under section 9 of the Bombay Medical Act shall be entertained at the next Session of the COUNCIL only.

93. If any person whose name has been erased from the *Medical Register* by direction of the COUNCIL, and who (in the case of a Medical Practitioner) still possesses a Qualification entitling him to be registered, makes application to the COUNCIL for the restoration of his name to the *Register*, the following shall be the method of procedure:—

(*i*) The application shall be in writing, addressed to the COUNCIL, and signed by the applicant, and must state the ground on which the application is made.

(*ii*) No application for the restoration to the *Medical Register* of the name of a person which has been removed under section 9 of the *Act* shall be entertained unless it be accompanied by a declaration made by the applicant setting forth the facts of the case, and stating that he is the person originally registered, and by a certificate from two practitioners registered under the Act as to his identity, or in the case of an applicant residing abroad an identity certificate (as per form 3 in Appendix to Chapter X) signed by two persons, who shall be magistrates or officers holding a commission in one of Government Services, Civil, Naval, or Military, or Justices of the Peace, or two resident practitioners registered under the Medical Act.

(*iii*) The statements in the application must also be verified by certificates in writing, to be given by a Justice of the Peace and by a Registered Medical Practitioner resident in the neighbourhood where the applicant had been residing since his removal, who were and are well acquainted with him before and since the erasure of his name, and they must testify to his present good character.

(*iv*) On receipt of the application, it shall be referred by the REGISTRAR to the EXECUTIVE COMMITTEE, for consideration and report. Before an application is considered by the COMMITTEE, the REGISTRAR shall notify the same to the Licensing Bodies whose Qualifications were held by the applicant at the time his name was erased; and shall further, by letter addressed to the person or body (if any) on whose complaint the applicant's name has been erased give notice of the application and of the time when the Committee intend to consider the same.

(*v*) The EXECUTIVE COMMITTEE shall consider the application and may, if they think fit, adjourn the consideration to a future date or require further evidence or explanations from the applicant.

(*vi*) The EXECUTIVE COMMITTEE shall make a Report to the COUNCIL upon the application *in camera* embodying in such Report such recommendations as the COMMITTEE shall think fit to make, with the reasons for the recommendations.

(*vii*) The application and certificate shall be in the Forms 1 and 2 in the *Appendix* to Chapter X, with such variations as circumstances may require. Printed forms shall be kept by the REGISTRAR who shall supply them to intending applicants.

APPENDIX TO CHAPTER X.

FORM NO. 1.

"*Statutory declaration by Applicant for Restoration of Name to the Medical Register.*

"TO THE BOMBAY MEDICAL COUNCIL.

"(*i*) I, the undersigned (1), now holding the Qualification of (2) , do solemnly and sincerely declare that the following are the facts of my case, and in reason of which I seek restoration of my name to the *Medical Register*.

"(*ii*) In the year (3) my name was duly registered in the *Medical Register* in respect of the following Qualifications, namely , (4) , and at the date of the erasure of my name hereinafter mentioned I was registered in respect of the same Qualifications, [(5) and also in respect of the following additional Qualifications, namely, . . .]

"(*iii*) At an inquiry held on the (6) day of the BOMBAY MEDICAL COUNCIL directed my name to be erased from the *Medical Register* on a complaint made to the BOMBAY MEDICAL COUNCIL by (7) of

(1) Insert full name.
(2) Insert Qualifications, if any.
(3) Insert date.
(4) Insert original Qualifications.
(5) To be added, if necessary.
(6) Insert date of inquiry.]
(7) Insert name and address of complainant.

and the offence for which the BOMBAY MEDICAL COUNCIL directed the erasue of my name was (8).

"(*iv*) Since the erasure of my name from the *Medical Register* I have been residing at (9) and my occupation has been

"(*v*) It is my intention if my name is restored to the *Medical Register* to (10)

"(*vi*) The grounds of applicantion are (11)

(Signed)

"Declared at

on

before me,

"A Commissioner for Oaths, or Justice of the Peace."

FORM No. 2.

Certificate in support of Application.

I,

of

certify as follows :—

"(*i*) I am (12)

"(*ii*) I have read paragraphs (*iv*) and (*v*) of the application of and say that I have been and am well acquainted with the said both before and since his name was erased from the *Medical Register*, that I believe him to be now a person of good character, and that the statements in the said paragraphs are to the best of my knowledge, information, and belief, true.

"(Signed)

"(Name)

"(Address and Qualifications)"

FORM No. 3.

Certificate of Identity.

I hereby certify that the aforesaid applicant is the above specified whose name formerly stood in the *Medical Register* with the following address and the qualifications. :—*

Name

Address

Registered Qualifications or Commission

Date (Here insert name and adress of person certifying.)

(8) Insert charge on which name was erased.
(9) The blanks in this paragraph must be filled in according to circumstances.
(10) Insert particulars as to proposed future professional occupation.
(11) All facts and grounds on which the application is made should be clearly and concisely stated.
(12) State whether a J. P. or a Registered Practitioner.
*Here insert applicant's former address and registered qualifications.

XI.—REGISTRAR, CLERKS, AND OFFICE-HOURS.

94. The scale of pay of the post of Registrar shall be 200—10—300. The present incumbent of the post, Mr. B. M. Sidhaye, B.A.,LL.B., B.T., shall, however, be eligible to draw pay in the scale of Rs. 250—10—300. In respect of leave and allowances the Registrar shall be subject to the Bombay Civil Services Rules.

95. The post of Registrar shall be of a permanent tenure. He shall be a full time officer of the Council and shall not be allowed to do any other work except with the approval of the Council. The person appointed to the post of Registrar shall be on probation for a period of one year.

96. The REGISTRAR shall keep his *Registers* in accordance with the provisions of the *Act* and the Rules and Regulations of the MEDICAL COUNCIL.

97. The REGISTRAR shall be present at every Meeting of the COUNCIL and of the EXECUTIVE COMMITTEE, and shall take *Minutes* of the proceedings at such Meetings.

98. The REGISTRAR, as Secretary, shall conduct and have charge of the correspondence of the COUNCIL, and shall issue all requisite notices in the manner required under these rules.

99. The REGISTRAR shall fulfil all the duties that may be required of him by the Rules and Regulations for the time being of the COUNCIL.

100. Public holidays excepted, the REGISTRAR shall attend at the Office from 10-30 a.m. to 5-30 p.m. on Mondays, Tuesdays, Wednesdays, Thursdays, and Fridays, and from 10-30 a.m. to 2 p.m. on Saturdays, and at other times when necessary, and shall not absent himself from his duties unless with permission from the PRESIDENT. The Executive Committee shall grant leave to the Registrar according to the Bombay Civil Services Rules.

101. The REGISTRAR shall be authorised to obtain whatever temporary additional assistance may be required, subject to the sanction of the PRESIDENT.

102. The REGISTRAR shall have the general control of the management of the office, authority over the Clerks and servants and superintendence of the building.

103. The duties of the Clerks shall be such as shall be assigned to them by the REGISTRAR, under the direction of the EXECUTIVE COMMITTEE.

104. Public holidays excepted, the Clerks shall attend at the Office from 10-30 a.m. to 5-30 p.m. on Mondays, Tuesdays, Wednesdays, Thursdays, and Fridays, and from 10-30 a.m. to 2 p.m. on Saturdays, and at other times when necessary, and they shall not be absent from their duties unless by permission from the REGISTRAR. The Executive Committee shall grant leave to the Clerks according to the Bombay Civil Services Rules. Leave to peons shall be granted by the Registrar in accordance with those rules.

XII.—RETURNS FROM MEDICAL LICENSING BODIES.

105. In all cases where information under sction 13 of the *Act* is required by the COUNCIL from the Bodies named in the Schedule to the Act, the REGISTRAR shall give notice to the several Bodies at least one month before such information is to be rendered.

106. During the month of January in each year, the Indian Medical Licensing Bodies indicated in the Schedule to the *Act* shall be invited to make returns to the COUNCIL, according to a prescribed form, stating the number of the Candidates who, in the preceding year, have passed the respective Examinations of such Bodies, and the number of those who have been rejected at such Examinations.

XIII.—CORPORATE SEAL.

107. The Corporate Seal shall be kept in a box having two different locks, and the key of one of these locks shall be in the custody of the PRESIDENT, and the key of the other lock in the custody of the REGISTRAR.

108. The Seal shall be affixed only by order of the COUNCIL, or, when the COUNCIL is not sitting, by order of the EXECUTIVE COMMITTEE; but its use by such Committee shall be limited to such acts as may be necessary to carry into effect the powers delegated to it by the COUNCIL.

109. Any order for affixing the Seal shall state the object of its use, and shall be entered in the *Minutes* of the COUNCIL or of the EXECUTIVE COMMITTEE, as the case may be.

XIV.—VISITATION OF EXAMINATIONS.

110. Under the powers conferred by section 13(*b*) of the *Act*, the COUNCIL shall from time to time appoint members of the COUNCIL as Visitors, who shall be deputed to attend and be present at such of the Professional Examinations required for obtaining the Qualifications of any of the Licensing Bodies as the COUNCIL may direct.

111. It shall be the duty of the EXECUTIVE COMMITTEE to advise the COUNCIL as to the Examinations to be visited and as to the time and place of each Visitation.

112. Each Visitor shall receive from the PRESIDENT a formal Commission in writing, under the Seal of the COUNCIL.

113. A Visitor shall not receive any remuneration, but shall be paid travelling allowance under the Civil Service Regulations, the non-official members being treated as officers of the first class.

114. It shall be the duty of Visitors to report on each Examination visited by them, and they shall include in their *Report* such particulars and observations thereon as they deem important for the information of the COUNCIL.

115. Visitors shall include in their *Reports* in the form of a brief diary, a statement of th days and hours at which they were present during the course of each Examination visited, and of the parts or divisions of the Examination in progress on each day.

116. The *Reports* of Visitors when prepared shall be forwarded to the PRESIDENT who shall cause them to be printed. The final proof copies of the *Reports*, as corrected, shall be signed in writing by the Visitors, and shall be preserved by the REGISTRAR as the authoritative copies.

117. The *Reports* of Visitors shall be referred by the PRESIDENT to the EXECUTIVE COMMITTEE for consideration and report to the COUNCIL, and shall be deemed confidential unless in any particular case the COUNCIL shall otherwise direct.

XV.—Inspection of Documents.

The following shall be the conditions on which leave is granted to members of the Council to inspect the documents of the Council, when not required for use by its legal advisers :—

118. A notice in writing of three clear days shall be given to the Registrar, except when the Council is in Session, when special leave may be granted.

119. The subject of the documents needed for inspection shall be stated.

120. The Registrar shall be held responsible for the safe custody of all documents.

121. It shall be an instruction to the Registrar to have the documents so arranged with respect to chronological order and otherwise as to facilitate their inspection during office hours.

122. Documents under inspection shall not be removed from the premises of the Council.

123. All such documents and the information therefrom derived shall be regarded as strictly confidential.

THE BOMBAY SMOKE NUISANCES ACT, 1912 (BOM. VII OF 1912).

G. N., G. D., No. 2810-A, dated 9th April 1913. **S. 11.**

Amended by G.N., G.D., No. 6402, dated 17th August 1915.
Amended by G.N., G.D., No. 3057, dated 1st May 1916.
Amended by G.N., G.D., No. 3836, dated 10th April 1923.
Amended by G.N., G.D., No. 3836, dated 29th January 1925.
Amended by G.N., G.D., No. 3836, dated 20th October 1925.
Amended by G.N., G.D., No. 3836, dated 11th July 1927.
Amended by G.N., G.D., No. ,760 dated 26th September 1927.
Amended by G.N., G.D., No. 7249, dated 19th July 1930.
Amended by G.N., P. D., No. 7249, dated 8th July 1931.
Amended by G.N., P.D., No. 8366, dated 21st December 1931.
Amended by G.N., P. & R.D., No. 7249, dated 19th February 1935.
Amended by G.N., P. & S.D., No. 1766/34, dated 20th June 1938.
Amended by G.N., P. & S.D., No. 8366, dated 12th March 1940.
Amended by G.N., P. & S.D., No. 8366, dated 1st April 1946.

In exercise of the powers conferred by section 11 of the Bombay Smoke Nuisances Act, 1912 (Bom. VII of 1912), as subsequently modified and with the previous sanction of the Governor General in Council, the Governor in Council is pleased to make the following rules to carry out the objects of the said Act, namely :—

I.—Meetings of Commission.

1. *Ordinary meetings.*—The Commission shall meet for the transaction of business ordinarily thrice in every year in Bombay upon such day and at such hours as the Commission shall from time to time determine.

2. *Special meetings.*—The President, or the member of the Commission to whom in his absence the President may delegate his duties, may, whenever he thinks fit, and shall upon requisition made in writing by not less than three members of the Commission, call a special meeting of the Commission.

3. *Notice of meetings.*—(*a*) At least five days' notice of all meetings shall be given to each member. Such notice shall be sent by post or by such other method as may be convenient :

Provided that the accidental failure of service of notice on any member shall not invalidate the proceedings at any meeting.

(*b*) The notice shall set forth the business to be transacted at the meeting, and no business other than that so stated shall be transacted, except with the consent of the President.

4. *Quorum.*—At every meeting of the Commission three members shall constitute a quorum.

5. *President at meetings.*—Every meeting shall be presided over by the President of the Commission or, in his absence, by such member as the members present at the meeting shall choose from among their number to preside at such meeting.

6. *Adjournment for completion of business.*—The President of any meeting at which a quorum of the Commission is present may adjourn the meeting from time to time and from place to place.

7. *Business to be transacted at meeting so adjourned.*—No business shall be transacted at any meeting held in pursuance of an adjournment under rule 6 other than that which was left unfinished at the original meeting ; and it shall not be necessary to give fresh notice of such adjourned meeting.

8. *Adjournment where no quorum.*—If at the time appointed for any meeting a quorum is not present, the meeting shall stand adjourned to some future date to be appointed by the President, and five days' notice of such adjourned meeting shall be given. The members present at such adjourned meeting shall have power to dispose of all business before it, whether a quorum is present or not.

9. *Motions and amendments.*—The President may, if he thinks fit, require that every motion and amendment be duly put in writing and be proposed and seconded before it is considered by the Commission.

10. *Votes on resolutions.*—(*a*) Whenever necessary, the votes of the members of the Commission present in meeting shall be taken by the President, and the resolution supported by the greater number of votes shall be deemed to be the resolution of the Commission at such meeting.

(*b*) The President shall have a second or casting vote in all cases of equality of votes :

Provided that when votes are taken, any member present may require that the votes given on each side shall be recorded.

11. *Minutes of proceedings.*—Minutes of the proceedings of every meeting of the Commission shall be drawn up and entered in a book to be kept for the purpose, and shall be submitted at the next ordinary meeting and, when approved, shall be signed by the President of such meeting.

12. *Supply of minutes to the State Government and to members.*—A copy of the minutes of every meeting of the Commission shall, as soon as possible, be transmitted to the State Government or to such officer as the State Government may direct.

13. *Reconsideration of subject of business once disposed of.*—Except on a requisition, in writing, made and signed by not less than four members in Bombay and two members of any Sub-Committee appointed under rule 16 elsewhere, no subject of business which has once been disposed of at a meeting shall be reconsidered by the Commission within a period of six months from the date of such disposal.

14. *Fees for attendance at meetings.*—A fee of thirty rupees shall be paid to each member of the Commission who attends any meeting of the Commission and to each member of the Sub-Committee appointed under rule 16, who attends any meeting of the Sub-Committee at which a quorum is present and business is transacted, and at which he is present from the beginning to the end thereof :

Provided always that no fee shall be paid in respect of any meeting at which is transacted such business only as has been adjourned from a former meeting.

15. *Effect of continued absence of non-official member from meeting.*—When any non-official member has been absent from four consecutive meetings he shall cease to be a member of the Commission and the President shall report the fact to the State Government with a request that steps may be taken for filling up the vacancy.

16. *Sub-Committees.*—(*a*) The Commission may from time to time, in accordance with a resolution passed at a meeting, appoint Sub-Committees of its members for the purpose of carrying into effect any of the provisions of the Act which the Commission is empowered to carry into effect, with such powers and under such instructions, direction or limitations as by such resolution may be defined; and may by a like resolution alter the constitution of, or dissolve, any such Sub-Committee.

(*b*) Two members of any such Sub-Committee shall form a quorum.

II.—Powers and Duties.

17. *Exercise of authority of the Commission.*—For the purposes of section 10 of the Act, the authority of the Commission shall be exercised by the President or by any of the members to whom the President may delegate his duties during his illness or his absence from Bombay:

Provided that any action taken by the President, or by any member exercising authority under this rule, shall be reported to the Commission at its next ordinary meeting.

18. *Duties of Inspectors.*—Every Inspector appointed under section 5 of the Act shall—

(*a*) submit reports to the Commission regarding any specified area within which, in his opinion, it is expedient that all or any of the trades and manufactures mentioned in sub-section (*1*) of section 7 of the Act should be prohibited under the said section;

(*b*) draw up and submit to the Commission a list of furnaces to be inspected under clause (*a*) of sub-section (*1*) of section 10 of the Act;

(*c*) keep records of his inspections of furnaces, and of his observations on the smoke emitted therefrom;

(*d*) submit his diaries for the information of the Commission;

(*e*) carry out the orders of the Commission as to the reporting of offences against the Act, and as to obtaining the authority of the Commission before prosecution; and

(*f*) carry out the orders of the Commission in respect of the inspection of any particular furnace, or class of furnaces, and in other respects generally for the purposes of the Act.

19. *Method of dealing with reports and diaries.*—(*a*) The President of the Commission or, in his absence, any member named by him, shall peruse the reports and diaries submitted by Inspectors, and shall issue necessary orders in accordance with the provisions of the Act.

(*b*) Such reports and diaries shall be laid before the Commission at its next meeting.

20. *Submission of Commission's recommendations to the State Government.*—Whenever the Commission is satisfied that it is expedient that any or all of the trades and manufactures mentioned in sub-section (*1*) of section 7 of the Act should be prohibited in any specified area, it may submit a recommendation to that effect to the State Government, stating reasons for making such recommendation, and giving a specification of the boundaries of such area.

III.—Emission of Smoke.

21. *Method of determining density of smoke.*—The density of smoke emitted from a furnace shall be determined by reference to Ringlemann's Smoke Gauge according to the scales described below :—

Ringlemann's Smoke Gauge consists of six squares, corresponding to scales upon a white background—

Scale 1—Consists of a white square which has no black lines across it and which is all white.

Scale 2—Consists of a white square with black lines drawn across the white background, vertically and horizontally 1 mm. in width and 9 mm. apart.

Scale 3—Consists of a white square with black lines similarly drawn, 2·3 mm. in width and 7·7 mm. apart.

Scale 4—Consists of a white square with black lines similarly drawn, 3·7 mm. in width and 6·3 mm. apart.

Scale 5—Consists of a white square with black lines similarly drawn, 5·5 mm. in width and 4·5 mm. apart.

Scale 6—The square is entirely black.

The squares described in this scale, if held at a distance of from 30 to 40 paces from the observer, present the appearance of blacks and greys of varying density, with which the colour of the smoke emitted from a furnace may be compared.

22. *Observation of density.*—The smoke emitted from a furnace or furnaces shall be held to be the smoke emitted from the chimney connected therewith, and its density for the purpose of the rules shall be observed at its exit from the chimney.

23. *Limits beyond which emission of smoke becomes an offence.*—(1) Smoke of the scales of density Nos. 1, 2 and 3 as determined in accordance with rule 21 may be emitted from furnaces for any time.

(2) Smoke of the scales of density Nos. 4 and 5, as determined in accordance with the said rule, may be emitted from furnaces for the times prescribed in respect of each such scale in the following table.

(3) Smoke of density varying from the scale of density No. 4 to the scale of density No. 5 may be emitted for times rateably reduced in accordance with the explanation to this rule, and not in excess of the times entered in column 4 of the table, provided that smoke of the scale of density No. 5 shall in no case be emitted for times in excess of those entered in column 2.

(4) Smoke of the scale of density No. 6 as determined in accordance with rule 21 is entirely prohibited and may not be emitted from any furnace.

Table of limits of Smoke.

1	2 In the case of density scale 5.	3 In the case of density scale 4.	4 In the case of densities scales 5 and 4 together.
Smoke may be emitted from a chimney serving.	For minutes per hour.	For minutes per hour.	For minutes per hour (rateably reduced in accordance with the explanation below).
One or two furnaces	2	3	2·21
Three or four furnaces	3	4	3·13
Five or six furnaces	4	5	4·05
Seven, eight or nine furnaces	5	6	4·97
Ten or more furnaces	6	7	5·89

Explanation.—For the purposes of sub-clause (3) of this rule the time during which smoke of the scale of densities Nos. 4 and 5 is emitted shall be reduced, in the case of smoke of the scale of density No. 4 in the ratio of 0·37 to 1 and in the case of smoke of the scale of density No. 5 in the ratio of 0·55 to 1.

Example.

Smoke of density scale 5 may be emitted from a chimney serving ten furnaces for 6 minutes per hour, and of density scale 4 for 7 minutes. The total time during which smoke of these densities may therefore be emitted is, when reteably reduced, $6 \times 0{\cdot}55 + 7 \times 0{\cdot}37$ or 5·89 minutes per hour.

24. *Extension of time in case of original lighting or stoking of furnaces.*—In lighting up fires in furnaces, or in stoking furnaces to raise steam, for the purpse of commencing the work of the factory, double the time prescribed in the above table shall be allowed during the first two hours, once a day.

25. *Furnaces of ocean-going steamers.*—The furnaces of the main boilers of ocean-going steamers when raising steam prior to leaving port or to moving from one part to another thereof shall be allowed, for half an hour before moving and for one hour after moving, thrice the time prescribed in the table in rule 23. Tugs while actually towing or assisting in the transportation of ocean-going steamers within the limits of the port shall also be allowed thrice the times prescribed in the said table.

26. *Altitude of chimneys from which smoke may be emitted.*—Smoke shall not be emitted from a furnace at a lower altitude than 100 feet from the firing-floor level :—

Provided that this rule shall not apply in the following cases :—

(1) Existing chimneys that are, in the opinion of the Commission, of sufficient height for the purpose of the Act.

(2) Furnaces in portable or travelling engines.

(3) Furnaces of engines which, in the opinion of the Commission, are intended for temporary purposes.

(4) Furances in steam-vessels.

(5) Any other furnaces especially exempted by the Commission.

27. *Issue of warning by Inspectors.*—When it appears to an Inspector that an offence has been committed under the Act in respect of any furnace, he may serve the owner of such furnace with a written warning by registered post. Such warning shall inform the owner of the furnace of the time and date of such offence, and shall be accompanied by a copy of the record of the observation taken, and it shall inform the owner that if the offence is again committed after the expiry of a period, which shall not be less than ten days, he will be liable to prosecution under the Act :—

(*i*) Provided that if in the opinion of the Inspector, material alterations in the furnace are necessary or appliances require to be fitted to the furnace, the period of warning may be extended to four months, or a longer period, if in the opinion of the Commission it is necessary.

(*ii*) Provided also that no warning need be given in the case of any steam-ship, locomotive or portable engine, before a prosecution is instituted.

28. *Record of observations.*—Records shall be kept by the Commission of the observations of the smoke from furnaces under the signature of the Inspector who has made the observations.

29. *Numbering of chimneys.*—A number shall be given to each chimney, and the number of each chimney, from which smoke is emitted in greater density or for a longer period than is allowed by these rules, shall be reported to the Commission.

IV.—Procedure regarding the submission and approval of plans under section 9-A (1).

30. *Procedure regarding the submission and approval of plans for the erection, alteration, addition to or re-erection, of furnace, flue or chimney.*—(1) Every person intending to erect, re-erect, alter or add to a furnace, flue or chimney must make an application for the purpose to the Chief Inspector of Smoke-nuisances for obtaining the approval of the Commission to the plans of the furnace, flue or chimney intended to be erected, altered, added to or re-erected. Such plans shall also show clearly the proposed alteration, addition or re-erection as the case may be.

(2) Every such application must be accompanied by two copies of the said plans, one of which, on approval of the Commission, shall be retained in the office of the Chief Inspector of Smoke- nuisances, and the other shall be returned at the time of communicating such approval to the applicant.

(3) Full particulars as to the dimensions and material of the furnace, flue or chimney, intended to be erected, altered, added to, or re-erected, as well as of the proposed alteration, addition, or re-erection as the case may be, shall be shown on the plans submitted, and the plans as approved by the Commission shall be adhered to.

(4) The plans shall comply with the following particulars :—

(*a*) The areas of flues and chimneys expressed as a percentage of the total fire grate area shall not be less than the percentage shown below against each item—

Back end or down take flue	45
Bottom flue	40
Side flues	33
Delivery flue to main	33
Main flue connected to grate having an area of less than 150 sq. ft.	30
Main flue connected to grate having an area of 150 sq. ft. or more.	25
Chimney connected to grate having an area of less than 150 sq. ft.	25
Chimney connected to grate having an area of 150 sq. ft. or more	20

(*Note.*—In the case of boilers having no fire grate; e.g., where oil fuel is used, the calculated equivalent fire grate area which would be necessary for coal as fuel should be taken.)

Provided that, in the case of boilers of the marine, locomotive, vertical and other similar type, the flues and chimneys shall not be of less area than the corresponding smoke outlets of the smoke-box or uptake forming an integral part of the structure.

(*b*) The flues and chimneys shall be air-tight and of substantial design and material, and dampers, where required to be fitted, shall be of the same area as the flue passages.

(*c*) All bends of the flues to the chimneys shall have the corners well rounded off so as to allow easy flow of gases through the flues. Every flue shall have a minimum width of 11 inches.

(*d*) Furnace doors shall be substantial and well fitted and shall have an air-regulating apparatus.

Provided that nothing contained in this rule shall apply to any steam vessel, railway or road locomotive or to any existing furnace, flue or chimney, except when it is altered, added to or re-erected.

(5) Nothing contained in this rule shall be deemed to derogate from the powers of the Commission to approve any plan not complying with any of the particulars specified in clause (*a*) of sub-rule (4).

THE BOMBAY TOWN PLANNING ACT, 1915 (BOM. I OF 1915).

G. N., G. D., No. 3772, dated 29th May 1916.

S. 52.

Amended by G. N., G. D., No. 4566, dated 4th July 1916.
Amended by G. N., G. D., No. 740, dated 28th January 1919.
Amended by G. N., G. D., No. 2844, dated 30th June 1924.
Amended by G. N., G D., No. 2844, dated 2nd February 1925.
Amended by G. N., G. D., No. 6271, dated 8th July 1925.
Amended by G. N., G. D., No. 2844, dated 8th October 1928.
Amended by G. N., G. D., No. 2844, dated 26th July 1930
Amended by G. N., G. D., No. 6271, dated 27th November 1935.
Amended by G. N., G. D., No. 2119/33, dated 25th April 1938.
Amended by G. N., G. D., No. 3157/33, dated 2nd April 1941.
Amended by G. N., G. D., No. 3157/33, dated 31st October 1946.

In exercise of the powers conferred by section 52 of the Bombay Town Planning Act, 1915 (Bom. I of 1915), the Governor in Council is pleased to make the following rules, namely :—

1. In these rules unless there is anything repugnant in the subject or context,—

(*a*) words or expressions which are defined in the Bombay Town Planning Act, 1915, shall have the same meaning as in that Act, and

(*b*) "Section", "sub-section", and "clause" shall mean, respectively, a section, sub-section, or clause of that Act.

2. (1) The officer holding an enquiry into disputed ownership under section 4 shall, as such enquiry proceeds, record a minute of the proceedings in his own hand embracing the material averments made by the parties interested, the material parts of the evidence, the decision, and the reasons for the same.

(2) Such enquiry shall be in public and seven days' notice of the enquiry shall be given to the parties to the dispute.

3. Previous to entry under section 5 into any building or upon any enclosed court or garden attached to a dwelling house twenty-four hours' notice in writing shall be given to the owner or occupier thereof, unless the owner or occupier has given his consent to such entry.

4. Local authority's declaration of intention to make a scheme shall include a statement that if within one month from the date of publication in the *Bombay Government Gazette* any person likely to be affected by such scheme communicates in writing to the Government of Bombay any objection or suggestion relating to such scheme the Government of Bombay will consider such objection or suggestion.

5. A local authority in addition to publishing a declaration of intention to prepare a town planning scheme in the *Bombay Government Gazette*, shall further publish the declaration by means of an advertisement in one or more newspapers published in the regional language and circulating within the jurisdiction of the local authority, and by posting copies of the advertisement in prominent places in or near the area proposed to be included in the scheeme and at the office of the local authority. The

advertisement shall contain the local authority's resolution making such declaration and shall intimate that the plan of the area proposed to be included in the scheme is open for public inspection at the head office of the local authority during office hours.

6. (1) The local authority shall call one or more meetings of persons known to to have rights in land or buildings in the area included in a proposed draft scheme and of other persons known to be affected by the scheme, provided that tenants whose leases expire within a year of the date of the local authority's declaration of intention to make a scheme need not be called. Due notice of such meetings shall be given in the area subject to the jurisdiction of the local authority and shall be sent by post to all persons believed to have an interest in the lands included in the scheme, when their addresses are known to the local authority, and also to any Government Department, or public body concerned. Such meetings shall be held as soon as may be convenient after the Government of Bombay has sanctioned the making of the scheme, and unless their is good reason to the contrary on the land included in the draft scheme.

(2) At such meetings the proposed draft scheme shall be generally described and explained, and a minute of each meeting shall be kept.

(3) Where the number of persons likely to be affected by the scheme is large, the local authority should where possible promote the formation of one or more committees of representatives of such persons. In some cases it may be found advisable to appoint a member of the local authority to be chairman of each committee. Use should be made of such committees for the purpose of explaining the scheme to landowners, and for the purpose of discussion and consultation during the course of the preparation of a draft scheme under section 10.

(4) Before the final adoption of a draft scheme, all objections shall be carefully considered, and the proposed scheme shall, with due regard to the interests of the public, be modified so as to meet as far as is possible the wishes of persons interested.

(5) The publication of a draft scheme under section 10 of the Act shall be by means of an advertisement in the *Bombay Government Gazette*, and in one or more newspapers published in the regional language and circulating within the jurisdiction of the local authority, and by posting copies of the advertisement in prominent places in or near the area comprised in the scheme and at the office of the local authority. The advertisement shall state the fact of a draft scheme having been prepared and the limits of the area comprised in the scheme and shall intimate that a copy of the scheme is open for public inspection at the head office of the local authority during office hours. It shall also recite section 13 of the Act. The date of publication referred to in section 13 means the date on which the *Bombay Government Gazette* containing the advertisement is published.

7. A draft scheme shall contain in addition to the particulars specified in clauses (*a*) to (*e*) of section 11 the following particulars, namely :—

(*i*) A map on a scale not smaller than one inch to the mile showing the area included in the scheme and the country within at least 2 miles of that area on every side. Such map shall show in particlar all existing roads and lands proposed to be reserved or allotted for roads in the scheme and all existing and proposed means of communication of every kind.

(*ii*) A plan on a scale not smaller than 200 feet to the inch showing the original plots with identification numbers and all existing buildings.

(*iii*) A plan on a scale not smaller than 200 feet to the inch showing both the original plots and the manner in which it is proposed to alter the boundaries of original plots.

(*iv*) A plan on a scale not smaller than 200 feet to the inch showing the boundaries of plots as it is proposed that they will appear after the final scheme is executed such plots being numbered serially. This plan shall illustrate as far as possible, by means of colours, letters, and explanatory notes, or in some other convenient manner, all such provisions of the scheme as may properly be illustrated in a plan. It shall also show such levels or contours as may be necessary for a proper understanding of the scheme.

(*v*) A re-distribution and valuation statement in Form A showing the estimated amounts to be paid to or by each of the owners included in the scheme.

(*vi*) A copy of the estimates of all works contemplated in the scheme and a statement of the dates on which it is anticipated that the respective works will be completed. The approximation of dates must be correct to within six months and the local authority shall be bound by these dates in the case of owners whose contributions are affected thereby.

(*vii*) A statement in Form B explaining the finance of the scheme as estimated.

8. (1) The period within which a local authority shall submit a draft scheme to the State Government under sub-section (*1*) of section 14 shall be four months from the date of its publication under sub-section (*1*) or sub-section (*2*) of section 10, as the case may be :

Provided that the State Government may, if it thinks fit, extend such period by a further period not exceeding three months, on the application in writing of the local authority in that behalf.

(2) The local authority shall submit along with the draft scheme—

(*i*) copies of the minutes of meetings held under rule 6 and particulars regarding any representative committee appointed under that rule ;

(*ii*) particulars of the steps taken to consult owners in the preparation of the draft scheme ; and

(*iii*) particulars of the manner in which the draft scheme has been published under rule 6.

(3) The draft scheme and the papers referred to in sub-rule (2) shall be submitted in duplicate.

(4) The period within which the State Government may sanction or refuse to give sanction to a draft scheme under sub-section (*2*) of section 14 shall be twelve months from the date of its submission to the State Government under sub-section (*1*) of section 14.

9. A commencement certificate under clause (*a*) of sub-section (*1*) of section 15 shall be in Form C.

10. (1) A local authority, for the purpose of the enquiry referred to in clause (*c*) of sub-section (*1*) of section 15, shall serve a notice upon such person calling upon him to show cause why he should not be directed to remove, pull down or alter

any building or other work in the area included in a scheme in respect of which the provisions of clause (*a*) or clause (*b*) of sub-section (*1*) of the said section 15 have been contravened and fixing a date not earlier than seven days from the date of service of the notice, for the hearing of the case.

(2) The local authority, if it considers it expedient to do so, may appoint a committee of not less than 3 of its members to hear such cases.

(3) Any representation which may be made by the person served with the notice in person or by recognized agent on the day appointed or which may be received in writing by such day, shall be duly considered. A minute shall be kept of the proceedings by the presiding officer and the reasons for the decision shall be stated. The decision shall be signed by the persons passing it.

11. In the City of Bombay when an arbitrator has been appointed, the authority authorized by section 33 (2) to appoint the president of the tribunal of arbitration shall be forthwith requested to make such appointment and to communicate the name of the person appointed to the State Government.

12. The appointment of an arbitrator for a town planning scheme or of a president of a tribunal of arbitration shall be notified in the *Bombay Government Gazette*, and shall be communicated to the local authority concerned. The local authority shall, immediately on receiving from the State Government information of the appointment, post up at the office of the local authority and in some prominent place within the area of the jurisdiction of the local authority a copy of the Government Notification appointing the arbitrator or the President, and shall give in the copy their addresses.

13. The local authority shall render all reasonable assistance to the arbitrator and shall allow him to examine freely all papers, documents, and plans connected with the scheme.

14. *Procedure of the arbitrator*—

(1) Before commencing the preparation of the final scheme the arbitrator shall give notice of the date on which he will commence his duties and shall state therein the time, as provided in rule 15 within which the owner of any property or right is injuriously affected by the making of town planning scheme shall be entitled under section 21 to make a claim before him. Such notice shall be advertised in one or more newspapers published in the regional language and circulating within the jurisdiction of the local authority and shall be posted in prominent places at or near the area comprised in the scheme and at the arbitrator's office.

(2) After the date fixed in the abovementioned notice the arbitrator shall continue to carry on his duties as far as possible on all ordinary working days and during ordinary working hours.

(3) Special notice of at least twenty-four hours shall be served upon the persons interested in each plot or particular comprised in the scheme, before the arbitrator proceeds to deal in detail with the portion of the scheme relating thereto. The notice shall also be posted at the arbitrator's office. Such notice shall be given in the cases mentioned in sub-section (*1*), (*2*) and (*9*) of section 30 and in any other cases where any persons have not been sufficiently informed that any matter affecting them is to be considered.

(4) The arbitrator shall give all persons affected by any particular of the scheme sufficient opportunity of stating their views and shall not pass any decision till he has duly considered their representations, if any.

(5) The proceedings shall not be conducted with the formalities of judicial proceedings, but whenever there are conflicting claims or any difference of opinion with regard to any portion of the scheme the arbitrator shall record a brief minute in his own hand setting out the points at issue and the necessary particulars, and shall pass a clear decision with the reasons therefor. All such minutes shall be appended to the scheme.

(6) The arbitrator shall record and enter in the scheme every decision passed by him under sub-sections (*1*), (*2*), (*3*), (*7*) and (*8*) of section 30. The calculations and estimates required by sub-sections (*3A*), (*3B*), (*3C*), (*3D*), (*4*), (*5*), (*6*) and (*9*) of section 30 shall be fully set out and clearly recorded.

(7) The final scheme drawn up by the arbitrator shall contain the particulars specified in rule 7.

(8) The component parts of the scheme shall be so arranged that they may be readily referred to in connection with the map and plans.

14-A. The Head of the Town Planning and Valuation Department in respect of all town planning schemes in the State of Bombay may, in accordance with the final scheme drawn up by the arbitrator under section 30 and rule 14, issue a certificate in Form D specifying the area and boundaries of a reconstituted plot, the nature of the tenure of, and of the owner's title to such a plot and the name of the person to whom the plot has been allotted under the final scheme.

15. The time within which the owner of any property or right which is injuriously affected by the making of a town planning scheme shall be entitled under section 21 to make a claim before an arbitrator shall be three months from the date fixed in the notice given by the Arbitrator under sub-rule (*1*) of rule 14 for the commencement of his duties.

16. The period to be prescribed under sub-section (*2*) of section 24 shall be one month from the date on which the owner is directed by the arbitrator under sub-section (*1*) of section 24 to make payment.

17. The president of the tribunal shall, within one month of the date on which he receives from the arbitrator the proposals referred in section 32, appoint an impartial person as assessor under section 33, and shall report the name of the person appointed to the State Government. The fact that the tribunal has been constituted and the person constituting it shall be notified in the *Bombay Government Gazette*, communicated to the local authority concerned, and notified by the local authority in the manner prescribed in rule 12.

18. *Procedure of the Tribunal of Arbitration*—

(1) No business shall be transacted by the tribunal unless all the members are present.

(2) Where any member of the tribunal ceases to act under sub-section (*7*) of section 33, the tribunal shall proceed with any business in hand as soon as a new member is appointed and it shall not be necessary to transact any business *de novo* by reason of such change in the constitution of the tribunal.

(3) The tribunal shall record their reasons in writing in any case where the proposals of the arbitrator under clauses (*3-A*), (*3-B*), (*3-C*), (*3-D*), (*4*), (*5*), (*6*) and (*9*) of section 30 are modified, varied or rejected by them.

(4) Before each part of a scheme is taken into consideration the tribunal shall give such notice as they deem sufficient to the parties interested in such part.

(5) The tribunal shall meet and adjourn as they think proper with due regard to the despatch of business.

19. The publication by the Government of Bombay under section 40 of a notification relating to the final scheme forwarded by the arbitrator shall be by means of an advertisement in one or more newspapers published in the regional language and circulating within the jurisdiction of the local authority concerned, and by posting copies of the advertisement in or near the area included in the scheme and at the office of the local authority.

20. When a scheme is sanctioned by the Government of Bombay under sub-section (*1*) of section 40, the arbitrator shall without delay forward a copy of the scheme to the Superintendent of Land Records in order that the survey records may be corrected.

21. (1) The local authority shall proceed as follows against any persons liable to be summarily evicted under section 42. The local authority shall in the first instance serve a notice upon such person requiring him within such time as may appear reasonable after receipt of the said notice to vacate the land, and, if such person fails to comply with the notice, the local authority shall depute an officer or servant to remove him.

(2) If such person resists or obstructs the officer,or, after eviction, re-occupies the land, the local authority shall prosecute him under section 188 of the Indian Penal Code.

22. A local authority before removing, pulling down, or altering any building or other work under clause (*a*) of sub-section (*1*) of section 43 shall give not less than seven days' notice of its intention to do so to the owner or occupier, if any, of such building or other work.

23. A local authority before executing any work under clause (*b*) of sub-section (*1*) of section 43 shall give not less than seven days' notice of its intention to do so to the person whose duty it is to execute the work.

23A. (1) Any local authority making an application for the variation of a scheme under sub-section (*1*) of section 45B shall state in such application all the particulars ; respect of the variation to be made.

(2) If such variation affects any of the items in Form A (Redistribution and Valuation Statement) or Form B (Finance Statement), prepared in connection with the scheme an extract from Form A and a revised Statement in Form B, together with a plan showing the change or changes proposed to be made, shall be sent along with the application made under sub-rule (1).

(3) The application and the papers referred to in sub-rule (2) shall be sent to the State Government in duplicate.

(4) The publication of the draft variation under sub-section (*2*) of section 45B shall be made by means of a notification published in the *Bombay Government Gazette* and in two newspapers circulating within the jurisdiction of the local authority.

Such notification shall also state that any person affected by the draft variation may communicate in writing any objection to such variation to the State Government through the Collector and the Commissioner and that the draft variation shall be open to the inspection of the public at the office of the local authority during office hours. The State Government shall also supply the local authority with such number of copies of the notification, not exceeding 15, as the local authority may require and such copies shall be affixed by the local authority in prominent places within the area affected by the scheme and more particularly within the area affected by the draft variation.

(5) When a variation is made under sub-section (*6*) of section 45B, the Arbitrator, and where no Arbitrator is appointed, the Collector concerned, shall as soon as may be forward a copy of such variation to the Superintendent of Land Records who shall correct the Survey Records affected by the variation.

24. (1) Documents, plans and maps relating to a sanctioned scheme made by a local authority shall be open for public inspection at the head office of the local authority at any time during the office hours of the local authority for a period of six months from the date of the *Bombay Government Gazette* in which the sanction was published.

(2) All final town planning schemes, shall, on the expiry of the period mentioned in sub-rule (1), be lodged with the Town Planning and Valuation Department of the Consulting Surveyor to Government.

25. All notices required to be served upon any person under these rules shall unless otherwise provided be served as nearly as may be in the manner laid down in the Code of Civil Procedure, 1908, for the service of a summons on a defendant.

26. The proceedings of local authorities under the Bombay Town Planning Act, 1915, shall be regulated by the municipal or local law applicable to such authorities so far as may be consistent with the provisions of that Act and these rules.

27. Any person who contravenes any of the provisions of the Act or of a final scheme published under section 40 shall, on conviction, be punishable with fine which may extend to Rs. 1,000 and in the case of a continuing contravention with an additional fine which may extend to Rs. 10 for every day during which such contravention continues after conviction for the first such contravention.

FORM A.

(Rules 7 and 14)

TOWN PLANNING SCHEME No.

Redistribution and Valuation Statement.

ORIGINAL PLOT.							FINAL PLOT.								
					Value in Rupees.				Value in Rupees.						
									Undeveloped.		Developed.				
Serial No.	Name of owner.	Tenure.	Number.	Area in square yards.*	Without reference to value of structures.	Inclusive of structures.	Number.	Area in square yards.	Without reference to value of structures.	Inclusive of structures.	Without reference to value of structures.	Inclusive of structures.	Demand from (+) or by (—) owner under section 19. Column 9b *minus* column 6b.	Increment (section 17). Column 10a *minus* columns 9a	Contribution (section 18) per cent. of column 12.	Addition to (+) or deduction from (—) contribution to be made under other sections.	Net Demand from (+) or by (—) owner, being the addition of columns 11, 13, 14.	Remarks.
1	2	3	4	5	6a	6b	7	8	9a	9b	10a	10b	11	12	13	14	15	16
													Rs.	Rs.	Rs.	Rs	Rs. —	
Total ..																		

*Instead of a square yard a guntha or other suitable unit may be taken as the unit of area.

FORM B.

(Rule 7).

Finance of Town Planning Scheme No.
of the
(Name of local authority).

Date Rs.

Expenses under section 3 (*a*), (*b*), (*e*), (*f*) and (*g*) ... ...

Other expenses*—

Expenses shown in the redistribution and valuation statement (total of Col. 11 of Form A) ... ...
Cost of publication under section 9(*2*) and under section 10(*1*) (Rules 5 and 6) ...
Compensation under section 15 (*2*) ... ...
Legal expenses under section 16(*c*) ... ...
Compensation under section 21 ... ...
Cost of demarcation, salaries of arbitrator and Tribunal of Arbitration and their staff and other expenses under section 39 (*2*) ... ...

(*a*) Total ...

Total of increments (Col. 12 of Form A) Rs.
Proportion of increment to be contributed by each holder (section 18) %
(*b*) Total of the contributions under section 18, Rs.

Net cost of scheme to local authority [(*a*)—(*b*)] Rs.

*In detail (sections or authority to be quoted).

NOTE.—The sign (—) before an item of expense indicates that the amount is payable to the local authority.

Particulars should be inserted showing how the net cost of the scheme to the local authority is proposed to be met.

FORM C.

(Rule 9).

COMMENCEMENT CERTIFICATE.

Permission is hereby granted, under section 15 of the Bombay Town Planning Act, 1915 (Bombay I of 1915),

to*

to†

on the following conditions, *viz.*,

*Name of person.
†Description of work.

FORM D.

BOMBAY TOWN PLANNING ACT, 1915.

Certificate of Tenure and Title.

Town Planning Scheme ‡ No.—

[Sanctioned under Government Notification, Department, No. , dated the 19 , and published at page of *Bombay Government Gazette*, dated]

A. G. or Sq. Yds.

Final Plot No. Area

Reputed owner Mr.

Present occupant holding the land on years lease

since *Date* Mr. §

Sketch of Final Plot No.

(Here enter the sketch).

Tenure.—Ordinary Rayatwari or Inam or any other as the case may be with reference to original plots. (If there are different tenures for different portions of the whole plot these will be shown separately on the plan being divided by a think chain line).

Title.—(Here describe the nature of the owner's title as found by the Arbitrator or Special Officer appointed under section 4 of the said Act).

Rights.—(If the owner of the plot has any special rights transferred to his final plot from the original plot or any new rights given to him under the scheme these may be entered here).

Disabilities.—(Rights of any other owner or person over this plot such as mortgage or easement, etc., may be entered here).

Note.—(1) The above plot shall be held subject to all the restrictions and regulations specified in the above Town Planning Scheme as finally sanctioned and published by Government under Notification No. , dated , and as regards *assessment* subject to the provisions of the Bombay Land Revenue Code, 1879, and of the rules and orders from time to time issued thereunder.

(2) No buildings or excavations or any other alterations shall be carried out in the above plot except with special written permission of the local authority having jurisdiction over the area at the time and in accordance with the provisions of the said Scheme.

(3) The holder of this certificate may apply to the Collector to have the amount and nature of the assessment and the period of guarantee shown on the certificate. The Collector's endorsement shall declare that non-agricultural assessment is, except in the case of inam land, liable to revision should the land be appropriated to any non-agricultural use—section 48 of the Bombay Land Revenue Code, 1879.

(4) Any other special regulation in respect of the above plot.

This certificate is granted under rule 14A of the rules under the Bombay Town Planning Act, 1915, as a *prima facie* proof of the tenure and title of the owner above named and shall be valid unless declared otherwise by a decree from a Civil Court within the period of limitation from the date hereof, by and under the hand and seal of the Consulting Surveyor to Government

This day of One thousand nine hundred and A.D.

Collector, Bombay Suburban District'

Consulting Surveyor to Government

Collector, Bombay Suburban District.

---

‡ Enter name of place.

§ This should only be entered if the land is held on a building lease for a period of at least 30 years.

THE BOMBAY CITY SURVEY ACT, 1915 (BOM. IV OF 1915).

G. N., R. D., No. 5912-B, dated 14th May 1924 (B. G., Pt. I, p. 1107). **S. 18**

In exercise of the powers conferred by section 18 of the Bombay City Survey Act, IV of 1915, the Governor in Council is pleased to publish the following rules made for the recovery of an amount not greater than one-half of the total cost of the survey under the provisions of section 10 of the said Act and in accordance with which rules the amount payable by the holders of land shall be regulated by the Collector of Bombay.

Rules under section 18 of Act IV of 1915.

(1) The liability to the payment of a survey fee under section 10 (1) of the Act shall be as laid down in the scale below :—

For every Cadastral Survey number with—	Rs.
(1) an area below 100 square yards	10
(2) an area between 101 and 200 square yards	15
(3) an area between 201 and 500 square yards	20
(4) an area between 501 and 1,000 square yards	30
(5) an area between 1,001 and 5,000 square yards	40
(6) an area between 5,001 and 10,000 square yards	60
(7) an area over 10,000 square yards	80

In addition the following fees calculated on the basis of rateable values shall be payable :—

Properties in class (1) with a rateable value of Rs. 500 and upwards.	2
Properties in class (2) with a rateable value of Rs. 1,500 and upwards	3
Properties in class (3) with a rateable value of Rs. 2,500 and upwards	4
Properties in class (4) with a rateable value of Rs. 5,000 and upwards	6
Properties in class (5) with a rateable value of Rs. 10,000 and upwards	10
Properties in class (6) with a rateable value of Rs. 15,000 and upwards	15
Properties in class (7) with a rateable value of Rs. 20,000 and upwards	20

In all classes except class (1), property of which the rateable value is less than annas 4 per square yard, will be entitled to a reduction of 20 per cent. in the fee chargeable under the area scale.

(2) For purpose of section 10 (1) of the Bombay City Survey Act, 1915, the area will be taken to be the area as ascertained from the latest survey and the rateable value will be taken to be the net rateable value as given in Municipal Assessment Registers for the year 1920-21. Where the values for that year are not available the latest value will be taken for calculation.

(3) Under section 10(2) (*b*), the holder of any land of which the area and the net rateable value are respectively 10 square yards or less and Rs. 5 or less shall be exempt from payment of a survey fee. This exemption is contingent on the co-existence of both these conditions (as regards area and value) in the holding.

(4) The Collector may delegate any or all of his powers to be exercised under section 10(3) and 10(4) as regards the issue and service of notices and other process and signing of certified extracts from maps and Registers, to the Superintendent, Bombay City Survey and Land Records Office, or any of his other gazetted assistants.

THE BOMBAY DISQUALIFICATION OF ALIENS ACT, 1918 (BOM. VI OF 1918).

G. N., G. D., No. 3738, dated 19th September 1932 (B. G., Pt. I, p. 2163). S. 5.

In exercise of the powers conferred by section 5 of the Bombay Disqualification of Aliens Act, 1918 (Bom. VI of 1918), the Governor in Council is pleased to exempt Portuguese subjects resident in the Bombay Presidency from the operation of the said Act.

G. N., G. D., No. 3738, dated 14th June 1926 (B. G., Pt. I, p. 1433). S. 6.

In exercise of the powers conferred by section 6 of the Bombay Disqualification of Aliens Act, 1918 (Bom. VI of 1918), the Government of Bombay are pleased to direct that the names of all local boards and all municipalities in municipal districts outside the City of Bombay should be omitted from the Schedule to the said Act.

THE CITY OF BOMBAY PRIMARY EDUCATION ACT, 1920 (BOM. XV OF 1920).

G. N., E. D., No. 236-A, dated 28th September 1923 (B. G., Pt. I, p. 2258). S. 15

Modified by G. N., E. D., No. 2249, dated 28th November 1938.

In exercise of the power vested in them by section 15 of the City of Bombay Primary Education Act, XV of 1920, Government are pleased to exempt the European and Anglo-Indian communities and, for the present, girls of the Mahomedan community from the operation of the aforesaid Act.

G. N., E. D., No. 2249, dated 30th May 1929 (B. G., Pt. I, p. 1259). S. 15

In exercise of the powers conferred by section 15 of the City of Bombay Primary Education Act, 1920 (Bom. XV of 1920), and in modification of Government Notification in the Educational Department, No. 236-A, dated the 28th September 1923, so far as it relates to the exemption of girls of the Muhammadan community from the operation of the said Act, the Government of Bombay are pleased to direct that, with effect from the 1st August 1929, the exemption shall apply to girls of the Muhammadan community between the ages of 10 and 11 years.

G. N., G. D., No. 2249, dated 28th November 1938 (B. G., Pt. I-A, p. 405). S. 15

In exercise of the powers conferred by section15 of the City of Bombay Primary Education Act, 1920 (Bom. XV of 1920), and in modification of Government Notifiactions in the Educational Department, No. 236-A, dated the 28th September 1923 and No. 2249, dated the 30th May 1929, so far as they relate to the exemption of girls of the Muhammadan community from the operation of the said Act, the Government of Bombay is pleased to direct that the exemption hitherto granted to girls of the Muhammadan community between the ages of ten and eleven years shall be withdrawn.

G. N., E. D., No. 236, dated 28th September 1923 (B. G., Pt. I, p. 2254). S. 18

Amended by G. N., E. D., No. 236, dated 27th December 1927.

Amended by G. N., E. D., No. 236, dated 29th January 1931.

Amended by G. N., E. D., No. 7682, dated 21st February 1944.

In exercise of the powers conferred by section 18 of the City of Bombay Primary Education Act, XV of 1920, Government are pleased to prescribe the following rules for the purposes of the aforesaid Act.

Rules.

1. For the purpose of these rules, Primary Education means education given through any recognised vernacular in the Infant Classes and Standards I to IV inclusive as prescribed in the standards of instruction sanctioned by the Schools' Committee and approved by the State Government.

English shall be accepted as the vernacular of such Indian Christians as speak no recognised Indian vernacular of the State and claim that English is their mother-tongue.

2. The educational authority by whom the duties imposed by sub-sections (1) and (6), respectively, of section 2 of the Act shall be performed shall be the Director of Public Instruction, Bombay State and the Educational Inspector, Bombay Division.

3. The application for permission to issue a notification under section 3 of the Act shall ordinarily be made at least three months before the date on which the notification is to be issued and at least six months before the date from which primary education is to be made compulsory. The application shall state whether the issue of a notification has been determined by a resolution passed at a general meeting of the Municipality specially called in this behalf and supported by at least two-thirds of the Councillors present at the meeting and by at least one-half of the whole number of the Councillors and also specify whether primary education is proposed to be made compulsory in the case of boys only or of girls only or of both boys and girls. It shall be addressed to the Secretary to Government, Educational Department, by the Corporation, a copy thereof being simultaneously furnished to the Educational Inspector, Bombay Division, and the Director of Public Instruction, and shall be accompanied by (*i*) a copy of the proposed notification, (*ii*) a statement in the annexed form "A" showing the existing provision for primary education in the Municipal district and the additional provision proposed to be made under section 4 of the Act and (*iii*) a statement showing the number of children likely to be excluded by the one mile rule [section 8 (*c*) of the Act].

4. Adequate provision for free and compulsory education under section 4 of the Act shall comprise—

(*i*) suitable provision not only for all children of either sex who on the date of the issue of a notification under the Act are liable under such notification, but also for all children of either sex who shall become liable thereafter under the aforesaid notification.

(*ii*) Teaching through and in Marathi, Gujarati, or Urdu according to the needs of the locality concerned. Where, however, there is a demand for education through any other vernacular, suitable arrangements shall be made for teaching through and in it, provided that the average attendance at any school opened for this purpose shall not fall short of 25.

(*iii*) The provision of suitable accommodation for pupils at the rate of not less than 8 square feet per child on the rolls of each school.

(*iv*) The provision of requisite sanitary appliances and more particularly, of an adequate number of latrines and urinals.

(*v*) The supply of the necessary articles of school furniture, *e.g.*, a chair, a table, blackboard and mats or benches for the children to sit on in each class room, and of the necessary text-books, maps, charts and scientific and otherapparatus.

(*vi*) The provision, so far as local conditions permit, of an adequate play-ground for each school, or (where this is not possible) of common play-grounds for approved groups of schools.

(*vii*) The employment of qualified* or trained teachers only at the rate of one for every 40 pupils on the rolls of each school ; in schools in which the average attendance exceeds 200 the head-masters shall be employed in addition to the ordinary staff of class teachers ; unqualified teachers shall not be employed unless qualified teachers are not available.

(*viii*) The payment of trained and untrained teachers according to the rates laid down by the Corporation with the approval and sanction of the State Government.

(*ix*) The appointment of paid officers, hereinafter called the " Special Attendance Officers ", whose duty it shall be to act under the orders of the Schools Committee in any matter falling wihin the business of the Committee, e.g., to organise a census of school children liable under the notification issued under the Act for compulsory primary education and to prepare and publish on behalf of the Schools Committee a register of such children in the form hereinafter prescribed, maintain it in good order, revise it every year and supply copies of it to the officers and institutions concerned, to see that parents of such children do not fail to cause them to attend a recongnised primary school in the locality, to note parents failing to do so and their reasons therefor (to be ascertained after careful personal enquiries) and to report to the Schools Committee from week to week all such cases of default ; and, on authorisation by the Schools Committee, to make complaints to a Magistrate on its behalf against defaulting parents and employers of children of compulsory age under sections 10 and 11 of the Act.

(*x*) The appointment of one or more Superintendents (who should act under the orders of the Schools Committee) for the efficient supervision and control of Municipal and other recognised primary schools.

5. The Bombay Municipality before applying the provisions of this Act to the Municipal District or to any part thereof, shall take a census of children ordinarily residing in the District or in the part in question in order to ascertain the number of those who will be of compulsory school age on the date from which compulsory education is to be enforced and shall prepare and publish for general information in the annexed form " B " a register in the local vernacular of such children (boys and girls being grouped separately if compulsion is proposed to be applied to both boys and girls simultaneously) two month before that date, supplying at the same time a copy thereof to the Educational Inspector, Bombay Division, and the Deputy Educational Inspector, Bombay, as well as to the Head mistress of each recognised primary school in the locality. A complete register of all children of compulsory school-going age, attending as well as non-attending, shall be maintained in the office of the Special Attendance Officer of the Schools Committee. Registers of non-attending children of compulsory school-going age only shall be printed and published in the month of November of each succeeding year. Copies of the registers of non-attending children of school-going age shall be supplied to the officers and institutions concerned. Copies of the registers shall also be exhibited for public use at a fixed place in the Municipal Office during office hours on working days. No change shall be made in them except on the authority and under the initials of such person as may be authorised by the

A qualified male teacher is one who has passed the Vernacular Final Examination or who holds a Public Service Certificate. A qualified female teacher is one who has passed at least the vernacular 5th standard.

Schools Committee in this behalf. The registers of attending as well as non-attending children shall be open to inspection by the Educational Inspector, Bombay Division, who shall have the right to scrutinise them and make such inquiries into their reliability as he may from time to time consider necessary or expedient.

6. Notwithstanding anything contained in clause (*ix*) of rule 4 or rule 5, the State Government may, in any particular year when it considers it necessary and expedient to do so, permit the Corporation to dispense with the taking of a census of school children liable under the notification issued under the Act for compulsory primary education, and with the printing and publishing of registers of non-attending children of school-going age.

A

Statement showing the present and Proposed provision for Primary Education in the Municipal Area.

Name of Ward or section of the Bombay Municipality.	Area in square.	Population excluding Europeans and Anglo-Indians.	Total number of existing Municipal and recognised Schools (Aided or Unaided) for Primary Education in the locality at the end of the previous official year.			
1	2	3	4			
				For Boys.	For Girls.	Total.
		Male ..	Municipal Schools ..			
		Female ..	Recognised Schools (Aided or Unaided).			
		Total ..				

Total number of pupils attending Schools indicated under column 4.				Average area of floor space per pupil provided in Schools under column 4 (*i.e.* in the class rooms excluding verandahs)
	Boys.	Girls.	Total.	Sq. ft.
Attending Municipal Schools ..				Schools ..
Attending recognised Schools ..				In recognised Schools ..

A—*contd.*

Total number of Trained, Untrained and Unqualified Teachers in Schools under column 4 and the average number of pupils per teacher. 7						Total direct expenditure of schools under column 4 in the previous official year. 8
	Trained.	Untrained.	Unqualified.	Total.	Average number of pupils per teacher.	Rs
In Municipal Marathi and Gujarathi Schools.						Of Municipal schools.
In Municipal Urdu Schools.						Salaries of staff.
In other Municipal Schools.						Pension Contributions.
In recognised Marathi, Gujarathi Schools.						House-rent ..
In recognised Urdu Schools.						Grants-in-aid to recognised Schools.
In recognised School of other kinds.						Miscellaneous including Contingencies and furniture, etc.
						Total ..
						Of other recognised Schools.
						Total ..

Government grant to the Municipality and to other recognised Schools in the locality in the previous official year. 9	Approximate total number of children liable for compulsory Primary Education in the Municipal area. 10			Approximate number of children liable for Compulsory Primary Education already at School. 11			Additional number of children to be provided for under the Compulsory Education Scheme. 12		
Rs.	Boys.	Girls.	Total.	Boys.	Girls.	Total.	Boys.	Girls.	Total.
To the Municipality.									
To other recognised Schools.									

A—*concld.*

Number of additional children which the existing Municipal and recognised Schools are expected to absorb. 13	Number of additional Municipal Schools teaching up to Standard IV at least proposed to be opened. 14	Arrangements proposed to be made for the accommodation of the additional Municipal Schools required. 15	Arrangements available to teach pupil in Municipal and other Schools (taken as a whole) under the proposed Scheme. 16
Expected to be absorbed by Municipal Schools.	Boys Schools ..	Rs.	
Expected to be absorbed by recognised Schools.	Girls Schools ..		
	Total ..		

Arrangements proposed to be employed in Municipal Schools. 17			Estimated increase in expenditure under the proposed Scheme with full details of recurring and non-recurring items. 18
	Number.	Fixed grades of salaries for Municipal School teachers.	*Recurring.* Rs.
Trained ..			Salary of Staff including that of supervision and of Special Attendance Officers ..
Untrained but qualified at Rs. per mensem.			Pension Contribution .. .. ..
			House-rent .. ..
Unqualified (for Urdu Schools only).			Contingencies and Miscellaneous .. ..
			Remission of Fees .. .. ..
			Grant-in-aid to recognised Schools for Primary Education .. ..
			Total ..
			Non recurring.
			Buildings .. ..
			Furniture and Equipment .. .. ..

B

Register of school children of compulsory school age in the *Municipality.*

Serial No. 1	Name of municipal ward. 2	Name of child and child's father with surname, if any (surname con ing last). 3	Caste and race. 4	Date of birth. 5	Date of attainment of the compulsory age (6 years) 6

Date of completion of the compulsory age (11 years) 7	Name and address of the parent or the guardian or other person who has the actual custody of the child. 8		Remarks.* 9
	Name	Address.	

* The school within easy reach of the child to which he or she may be sent should be here indicated; or if a child is exempted under section 8 a. r emark to that effect should be entered. A child who has passed vernacular standard IV will be considered to have completed his primary education for the purposes of exemption under section 8.

THE BOMBAY PLEADERS ACT, 1920 (BOM. XVII OF 1920).

G. N., R. D., No. 1363, dated 17th May 1921 (B. G., Pt. I, p. 1275). **Ss. 7 (1)(e) and 8 (d).**

Amended by G. N., R. D., No. B-366, dated 14th September 1921.

Under the provisions of the last clause of sections 7 (1) (*e*) and 8 (*d*) of the Bombay Pleaders Act, 1920, the Governor in Council is pleased to direct that Vakils of the High Court and the District Pleaders shall be entitled to practise before the public officers concerned in any of the following proceedings provided the parties to them have or are allowed the right to appear by their legal practitioners :—

(*i*) Proceedings under sections 118, 119, 125, 129 and 203 and Chapter X-A of the Bombay Land Revenue Code (Bombay Act V of 1879).

(*ii*) Proceedings under sections 14 and 20 of the Khoti Settlement Act (Bombay Act I of 1880).

(*iii*) Proceedings under sections 6, 7, 15, 17, 18, 19, 20, 29-D of the Gujarat Talukdars' Act (Bombay Act of 1888).

(*iv*) Proceedings under Parts III, V, VI, VII and X and sections 72, 75 and 79 of the Bombay Hereditary Offices Act (Bombay Act III of 1874).

(*v*) Proceedings under Part V of the Bombay Irrigation Act (Bombay Act VII of 1879).

THE BOMBAY ENTERTAINMENTS DUTY ACT, 1923
(BOM. I OF 1923).

G. N., R. D., No. 6670/28, dated 8th June 1944 (B. G., Pt. IV-B, p. 162). **S. 6 (3).**

In exercise of the powers conferred by sub-section (*3*) of section 6 of the Bombay Entertainments Duty Act, 1923 (Bom. I of 1923), the Government of Bombay is pleased to exempt from liability to entertainments duty all the entertainments where the payment for admission is one anna or less.

G. N., R. D., No. 9655/39, dated 28th July 1948. **S. 6 (3).**

In exercise of the powers conferred by sub-section (*3*) of section 6 of the Bombay Entertainments Duty Act, 1923 (Bom. I of 1923), and in supersession of Government Order in the Revenue Department, No. 9855/39, dated the 10th December 1946, the Government of Bombay is pleased to exempt from liability to entertainments duty all sporting entertainments admission to which is on payment of a sum not exceeding four annas.

G. N., R. D., No. 4345-E/III, dated 25th January 1923 (B. G., Pt. I, p. 187). **S. 7.**

Amended by G. N., R. D., No. 7366, dated 13th July 1923.
Amended by G. N., R. D., No. 8780/E, dated 27th December 1923.
Amended by G. N., R. D., No. 7366/E, dated 1st May 1924.
Amended by G. N., R. D., No. 4345-III, dated 17th July 1925.
Amended by G. N., R. D., No. 6316/28, dated 24th November 1932.
Amended by G. N., R. D., No. 7740/28, dated 20th March 1933.
Amended by G. N., R. D., No. 7740/28, dated 8th August 1933.
Amended by G. N., R. D., No. 69/33, dated 6th November 1933.
Amended by G. N., R. D., No. 4298/33, dated 8th March 1938.
Amended by G. N., R. D., No. 4345-E, dated 30th December 1943.
Amended by G. N., R. D., No. 4345-E, dated 14th March 1944.
Amended by G. N., R. D., No. 4345-E, dated 1st May 1944.
Amended by G. N., R. D., No. 4345-E, dated 21st June 1944.
Amended by G. N., R. D., No. 1618/45, dated 26th September 1946.
Amended by G. N., R. D., No. S. 90-E, dated 3rd April 1948.
Amended by G. N., R. D., No. S. 90/2464, dated 10th February 1950.

In exercise of the powers conferred by section 7 of the Bombay Entertainments Duty Act, 1923 (Bom. I of 1923), the Governor in Council is pleased to make the following rules for securing the payment of the entertainments duty and generally for carrying into effect the provisions of the Act :—

RULES.

PAYMENT OF DUTY BY STAMPS.

1. *Purchase of stamps.*—No person shall purchase any stamp required for the purposes of the Act except from the Superintendent of Stamps in the City of Bombay

or the Collector elsewhere or from any other officer duly authorised by these officers to sell such stamps :

Provided—

(*i*) that nothing in this rule shall apply to any person purchasing such a stamp affixed to a ticket for the purpose of admission to an entertainment, and

(*ii*) that when the proprietorship of an entertainment changes hands, it shall be lawful for the new proprietor, after giving due notice to the officer prescribed under section 10 of the Act, to purchase from the former proprietor the stock of unused stamps in the latter's possession.

2. *Issue of Stamps.*—No stamp issued for the purposes of this Act shall be issued to any person by or on behalf of the proprietor of any entertainment otherwise than securely affixed to a ticket issued for the purpose of authorising admission to an entertainment.

3. *Price of admission shown on and stamp affixed to ticket.*—Except as provided in rules 13 and 20 every dutiable ticket issued on payment for admission to an entertainment shall be clearly marked with the price of admission, excluding the duty payable under the Act, and shall also have securely affixed to it a stamp of the value of the duty payable upon the said price of admission.

4. *Plural tickets.*—(*a*) Every dutiable ticket issued for the purpose of admitting more than one person to an entertainment shall have clearly shown thereon the number of persons to be admitted and shall have affixed to it a stamp or stamps equal in value to the total duty that would have been payable on tickets for admitting each such person separately.

(*b*) The stamp or stamps to be affixed to a ticket entitling the purchaser to the exclusive use of a box or similar accommodation shall be of the value of the duty that would be payable upon a ticket of the same price admitting one person to the entertainment.

5. *Transfer of seat.*—When the purchaser of any ticket admitting him to one part of an entertainment wishes to transfer to another part of the entertainment for which the price of admission is higher and dutiable, the proprietor shall issue him a second ticket stamped with a stamp of the value of the difference between the duty leviable on the second ticket and that leviable on the first. The purchaser shall retain the portion of the first ticket returned to him under rule (7).

6. *Season tickets.*—Every season ticket, or ticket available for more than one entertainment, shall have marked thereon the name of the purchaser and the period for which it is available and the stamp to be affixed to such ticket shall be of the value of the duty that would be payable upon a ticket of the same price admitting the purchaser to one entertainment.

7. *Defacement and destruction of stamps.*—On admission of the purchaser the proprietor shall cause every ticket, not being a season ticket or ticket available for more than one entertainment, issued for admission to the entertainment to be collected and the stamp to be defaced by tearing the ticket into two portions across the stamp and one portion to be returned to the purchaser. The purchaser shall retain his portion until he has left the place of entertainment. The other portion shall be retained by the proprietor until 3 p. m. of the day following the entertainment and shall then be destroyed.

8. *Torn, etc., stamps.*—No ticket bearing a stamp that has been torn, defaced or otherwise marked or mutilated shall be issued by the proprietor of an entertainment.

9. *Register of stamps.*—Every proprietor of an entertainment shall keep a register in Form A showing the number of stamps purchased and issued by him.

10. *Refund of value of unused stamps.*—The proprietor of an entertainment may at any time return to any person authorised to sell stamps under rule 1 any unused stamps in his possession and shall be entitled to claim refund of their value, subject to a discount of 1 anna for each rupee or portion of a rupee of such value.

11. *Renewal of damaged or spoiled stamps.*—When any stamps purchased for use under the Act have been damaged or spoiled, the purchaser may apply in writing to the officer selling such stamps, who on being satisfied that they have not been wilfully damaged or spoiled, may give in lieu thereof—

(*a*) other stamps of the same denomination and value, or

(*b*) stamps of any other denomination to the same value, or

(*c*) at his discretion, the same value in money, deducting one anna for each rupee or fraction of a rupee of such value.

PAYMENT OF DUTY OTHERWISE THAN BY STAMP.

12. *Security.*—Every proprietor allowed to avail himself of the provisions of section 4, sub-section (*2*), of the Act shall furnish such security to the officer prescribed under section 10 as that officer may require.

13. *Unstamped tickets issued under the provisions of section 4 (2) (a) and (b).*—Every ticket issued by a proprietor, who has been permitted to avail himself of the provisions of section 4, sub-section (*2*) (*a*) or (*b*), shall have shown upon it the price of admission, the amount of duty and the total payable and the Book No. and serial No. of the ticket, provided that the prescribed officer may exempt any proprietor upon such conditions and for such period as he thinks fit from the operation of this rule or any part thereof.

14. *Returns required under section 4 (2) (a) and (b).*—Every proprietor making a consolidated payment under section 4 (*2*) (*a*) or making payment in accordance with return of the payments for admission under section 4 (*2*) (*b*), shall, within ten days of the date of entertainment, submit to the prescribed officer a return in Form B, showing the number of tickets issued at each rate, the serial number of tickets issued, the gross amount received from the sale of tickets and the amount of duty collected. He shall, if so required by the prescribed officer, also submit to the said officer, within ten days of the date of entertainment, a return in Form B (1), showing the price of programme or synopsis including duty, the number of programmes or synopses issued, the gross amount received from the sale thereof and the amount of duty collected.

15. *Return required under section 4 (2) (c).*—When a proprietor is permitted to avail himself of the provisions of section 4 (*2*) (*c*) he shall submit to the prescribed officer within ten days of the entertainment a return in Form C showing the number of persons admitted by the mechanical contrivance, the gross amount including duty paid for admission by such persons and the amount of duty collected from them.

16. *Admission by mechanical contrivance; notice.*—No person shall in any circumstances be admitted by any mechanical contrivance save on payment of the price of admission, inclusive of duty. Such price inclusive of duty shall be shown in a conspicuous position on or near the mechanical contrivance; the fact that the price is inclusive of duty shall also be stated clearly.

17. *Payments under section 4 (2).*—All payments made in accordance with the provisions of section 4 (2) of the Act shall be made to the prescribed officer within ten days of the entertainment at such time and place and in such manner as he shall require.

17-A. *Payment of duty on programmes or synopses.*—Where payment for a programme or synopsis is compulsory, the duty shall be levied on the total sum paid for admission to the entertainment including the sum paid for the programme or synopsis. Where payment for a programme or synopsis is voluntary, the duty shall be levied separately on the sum paid for admission and on the sum paid for the programme or synopsis.

MISCELLANEOUS.

18. *Restriction of issue of complimentary tickets.*—No proprietor of an entertainment shall issue more than five per cent. of the tickets or ten tickets whichever is less for any class of seats for an entertainment as complimentary tickets and every proprietor issuing any such tickets shall submit to the officer prescribed under section 10 of the Act within ten days from the date of the performance of the entertainment, a return of such tickets in Form "E". Such percentage and number of tickets shall be inclusive of the number of complimentary tickets claimed under any lease for the time being in force in respect of the place where the entertainment is held :

Provided that nothing in this rule shall apply to any entertainment or class of entertainments which the Provincial Government may, by general or special order, specify in this behalf.

19. *Exemptions under section 6 (1) and refunds under section 6 (2).*— (1) Any person claiming exemption, under sub-section (*1*) of section 6, from payment of the entertainments duty shall present an application for such exemption to the Commissioner of Police or the District Magistrate, as the case may be, ten clear days before the date of the entertainment.

(2) Any person claiming under sub-section (*2*) of section 6, a refund of the entertainments duty shall present an application for such refund to the Commissioner of Police or the District Magistrate, as the case may be, within fifteen days from the date of the entertainment. An application for refund not presented within such period shall be rejected.

20. *Form of exemption under section 6 (1).*—Where exemption is given under section 6 (*1*) the $\frac{\text{District Magistrate}}{\text{Commissioner of Police}}$ shall issue to the proprietor a certificate in the appended form, and the proprietor shall comply with the conditions therein stated.

21. *Applications for exemption.*—All applications for exemption under section 6 (*3*) of the Act shall be made to the officer prescribed in this behalf under section 10 of the Act not later than ten days before the date of the entertainment.

22. *British and Indian soldiers (including airmen) and sailors in uniform.*—In the case of entertainments given by Naval, Military and Air Force Units and institutions, the price of tickets sold to British and Indian soldiers (including airmen) and sailors in uniform shall be the price of admission only, exclusive of duty.

Such tickets shall be special unstamped tickets marked with the price of admission only and shall be issued through a service authority not below the rank of a commissioned officer and the proprietor shall submit to the officer prescribed under section 10 a weekly return of such tickets in Form D.

Where a mechanical contrivance under section 4 (2) (c) is used, soldiers (including airmen) and sailors shall be admitted by another entrance.

22-A. *Exemption under section 7 (1) (h) of the Bombay Entertainments Duty Act, 1923.*—Soldiers, sailors and other members of the Defence Forces in uniform of any nationality shall be exempted from payment of entertainments duty as shown below :—

(*a*) when they visit a cinema other than a military cinema or a show staged by the ENSA,

(*i*) full exemption where the payment for admission to an entertainment, excluding the amount of duty, does not exceed 4 annas ;

(*ii*) exemption of one anna only where the payment for admission to an entertainment, excluding the amount of duty, exceeds 4 annas but does not exceed 8 annas ;

(*iii*) exemption of two annas only where the payment for admission to an entertainment, excluding the amount of duty exceeds 8 annas but does not exceed one rupee ;

(*b*) when they visit a military cinema or a show staged by ENSA, full exemption.

Explanation.—A military cinema means a cinema which has been opened by the Military or by Military contractors or other persons at the request of the Military for the use of the Defence Forces.

23. *Complimentary tickets.*—Every complimentary ticket issued by a proprietor of an entertainment shall have shown thereon the serial number of the ticket, the name and address of the holder of the ticket and the class of seat and the show and date for which it is available.

23-A. *Admission to places of entertainment.*—No person shall be admitted to nor shall any person enter, any place where an entertainment is held for the purpose of witnessing such entertainment unless he is the holder of a ticket for which payment has been made or of a complimentary ticket permitted to be issued under these rules.

24. *Production of tickets.*—A person who has been admitted to an entertainment in respect of which the duty due is not payable in accordance with the provisions of section 4 (2), shall upon demand made during the course of or immediately before or after the entertainment, produce to any officer authorised under section 8 the ticket, badge, card of membership, voucher or document by means of which he was admitted, or a portion of the ticket by means of which he was admitted bearing a stamp defaced in accordance with these rules, or the stamped cover of the book or the stamped principal part of the sheet from which the ticket, by means of which he was admitted, was taken.

25. *Transfer to different parts of the place of entertainment.*—Any reference in these rules to admission to a place of entertainment or to a person admitted to a place of entertainment shall so far as may be deemed to include a reference to the admission to another part of the place of entertainment for admission to which part a payment involving duty or more duty is required of a person who has been admitted to one part of that place of entertainment, and to such a person admitted to such another part of the place of entertainment and these rules shall have effect accordingly.

26. *Inspection of books, etc.*—Any officers duly empowered in this behalf by the State Government may at any time require the proprietor of an entertainment to produce for inspection all his books and records, and all tickets or portions of tickets in his possession, relating to the entertainment.

Under the provisions of this rule of the entertainments the Collector of Bombay in the City of Bombay, the Huzur Deputy Collectors and the Huzur Mamlatdars and Huzur Mukhtyarkars in the district head quarter towns and the Mamlatdar, Mukhtyarkar and Mahalkari in any other place, to which the operation of the Bombay Entertainment Duty Act, 1923 (Bom. I of 1923), has been extended, are empowered to call upon the proprietor of an entertainment in the local area concerned to produce for inspection all his books and records and all tickets or portions of tickets in his possession relating to the entertainment.

FORM A.

Monthly Register of Stamps. Name of proprietor

Denomination of stamp.	Opening balance.	Date of purchase.	Number purchased.	Number used on tickets.	Closing balance.	Remarks.

FORM B.

Statement of tickets issued when duty is payable under section 4 (2) (a) or (b).

Name and place of Entertainment. Date of Performance.

Price of tickets including duty.	Number of tickets issued subject to duty.	Serial numbers of tickets issued.		Gross receipts.	Amount of duty collected.	Remarks.
		From	To			

FORM B (1).

Statement of programmes or synopses issued when duty is payable under section 4 (2) (a) or (b).

Name and place of Entertainment. Date of Performance

Price of programme or synopsis including duty.	Number issued of programmes or synopses subject to duty the purchase whereof is.		Gross receipts.	Amount of duty collected.	Remarks.
	Compulsory.	Voluntary.	Rs. a. p.	Rs. a. p.	

FORM C.

Return of persons admitted by mechanical contrivance.

Name and place of Entertainment. Date of Performance.

Price of admission.	Number of persons admitted.	Gross receipts.	Amount of duty collected.	Remarks.

FORM D.

Return of tickets sold under rule 22 to British and Indian Soldiers and Sailors.

Name and place of Entertainment. Week ending.

Rates of tickets sold.	Number of tickets sold at each rate.	Remarks.

FORM E.

Return of complimentary tickets.

Name and place of Entertainment. Date of Performance.

Rates of tickets issued.	Number of tickets available at each rate.	Number of complimentary tickets issued for each class of seats.	Percentage of column 3 to column 2.
1	2	3	4

FORM F.

Form of Certificate prescribed under Rule 20.

This is to certify that the $\frac{\text{Commissioner of Police}}{\text{District Magistrate}}$ authorises the Entertainment specified below to be given FREE OF ENTERTAINMENTS DUTY provided that the whole of the takings are devoted to philanthropic or charitable purposes :—

Description

Date

Place

This certificate is issued on the following conditions :—

(1) The whole of the takings of the Entertainment without any deduction for expenses, however small, must be paid over to

(2) If the $\frac{\text{Commissioner of Police}}{\text{District Magistrate}}$ so requires, a full and true account of the whole of the takings, together with a written acknowledgment from the Society, Institution or Fund specified under (1) must be furnished to them by the persons responsible for the management of the Entertainment, within one month after the date of the Entertainment, and those persons will be liable for the payment of the proper tax if the $\frac{\text{Commissioner of Police}}{\text{District Magistrate}}$ is not satisfied that the whole of the takings, without any deduction for expenses, have in fact been paid over to the Society, Institution or Fund referred to.

(3) This certificate must not be used for any other Entertainment than that specified above, and it must be exhibited in a prominent position at the public entrance to the place of Entertainment at the time the public are admitted and during the Entertainment. No correction or erasure of any kind must be made in the certificate.

(4) If the entertainment is *not* given on the date or at the place specified above, the persons responsible for the management of the Entertainment must give notice in writing to that effect within one week after the date fixed for holding it.

(Signed)

$\frac{\text{Commissioner of Police.}}{\text{District Magistrate.}}$

NOTE.—Failure to comply with any of the conditions set out in this certificate involves liability to penalty of Rs. 500.

G. N., R. D., No. 4345-IV, dated 11th March 1932 (B. G., Pt. I, p. 594).

Under the provisions of rule 26 of the rules for securing the payment of the entertainments duty published in Government Notification in the Revenue Department, No. 4345-E/III, dated the 25th January 1923, and in supersession of

Government Notification in the Revenue Department, No. 4345-E/III, dated the 19th February 1923, the Governor in Council is pleased to empower the Collector of Bombay in the City of Bombay, the Huzur Deputy Collectors and the Huzur Mamlatdars and Huzur Mukhtyarkars in the district headquarter towns and the Mamlatdar, Mukhtyarkar and Mahalkari in any other place, which the operation of the Bombay Entertainments Duty Act, 1923 (Bom. I of 1923), has been extended to call upon the proprietor of an entertainment in the local area concerned to produce for inspection all his books and records and all tickets or portions of tickets in his possession relating to the entertainment.

G. N., R. D., No. 9807-E, dated 17th December 1923 (B. G., Pt. I, p. 2975).

Under the provisions of rule 26 of the Bombay Entertainments Duty Rules, 1923, published in Government Notification, Revenue Department, No. 4345-E/III, dated the 25th January 1923, the Governor in Council is pleased to empower the City Magistrate, Poona, in respect of the area within the limits of the Poona City, the Poona Suburban Municipal District and the Poona Cantonment in which the Bombay Entertainments Duty Act, 1923 (Bom. I of 1923), is in operation, to call upon the proprietor of an entertainment to produce for inspection all his books and records, and all tickets in his possession, relating to the entertainment.

G. N., R. D., No. 7230-E, dated 17th December 1923 (B. G., Pt. I, p. 2975). **S. 10.**

In exercise of the powers conferred by section 10 of the Bombay Entertainments Duty Act, 1923 (Bom. I of 1923), the Governor in Council is pleased to empower the Collector of Bombay in the City of Bombay, and elsewhere the Collector of the district in respect of an area within the district in which the Act is in operation, to grant exemption under section 6(3) of the said Act from payment of duty in respect of entertainments, the net proceeds of which are devoted to philanthropic or charitable purposes and the whole expenses of which do not exceed 20 per cent. of the receipts.

THE BOMBAY LOCAL BOARDS ACT, 1923 (BOM. VI OF 1923).

G. N., G. D., No. 7830, dated 12th July 1935 (B. G., Pt. IV, p. 622).

S. 38-A (1).

Whereas in the opinion of the Government of Bombay it is in the interest of the inhabitants of the talukas mentioned in column 2 of the Schedule hereto annexed that the taluka local boards mentioned in column 3 of the said Schedule should be abolished;

Now, therefore, in exercise of the powers conferred by sub-section (1) of section 38-A of the Bombay Local Boards Act, 1923 (Bom. VI of 1923), the Government of Bombay are hereby pleased to direct that the said taluka local boards shall be abolished with effect from 1st October 1935 :—

Schedule.

Names of Districts.	Names of Talukas.	Names of taluka local boards.
1	2	3
Sholapur ...	(1) Sholapur ...	Taluka Local Board, Sholapur.
	(2) Barsi ...	Taluka Local Board, Barsi.
	(3) Madha ...	Taluka Local Board, Madha.
	(4) Karmala ...	Taluka Local Board, Karmala.
	(5) Pandharpur ...	Taluka Local Board, Pandharpur.
	(6) Malsiras ...	Taluka Local Board, Malsiras.
Surat ...	(1) Chorasi ...	Taluka Local Board, Chorasi.
	(2) Olpad ...	Taluka Local Board, Olpad.
	(3) Bardoli ...	Taluka Local Board, Bardoli.
	(4) Mandvi ...	Taluka Local Board, Mandvi.
	(5) Jalalpore ...	Taluka Local Board, Jalalpore.
	(6) Chikhli ...	Taluka Local Board, Chikhli.
	(7) Bulsar ...	Taluka Local Board, Bulsar.
Belgaum ...	(1) Belgaum ...	Taluka Local Board, Belgaum.
	(2) Chikodi ...	Taluka Local Board, Chikodi.
	(3) Hukeri ...	Taluka Local Board, Hukeri.
	(4) Athni ...	Taluka Local Board, Athni.
	(5) Gokak ...	Taluka Local Board, Gokak.
	(6) Parasgad ...	Taluka Local Board, Parasgad.
	(7) Sampgaon ...	Taluka Local Board, Sampgaon.
	(8) Khanapur ...	Taluka Local Board, Khanapur.
Karachi ...	(1) Karachi ..	Taluka Local Board, Karachi.
	(2) Tatta ..	Taluka Local Board, Tatta.
	(3) Ghorabari ..	Taluka Local Board, Ghorabari.
	(4) Mirpur Sakro ..	Taluka Local Board, Mirpur Sakro.
	(5) Shah Bunder ..	Taluka Local Board, Shah Bunder.
	(6) Jati ..	Taluka Local Board, Jati.
	(7) Mirpur Bathoro ..	Taluka Local Board, Mirpur Bathoro.
	(8) Sujawal ..	Taluka Local Board, Sujawal.
Hyderabad ...	(1) Hyderabad ..	Taluka Local Board, Hyderabad.
	(2) Hala ..	Taluka Local Board, Hala.
	(3) Tando Allahyar ..	Taluka Local Board, Tando Allahyar.
	(4) Guni ..	Taluka Local Board, Guni.
	(5) Badin ..	Taluka Local Board, Badin.
	(6) Tando Bago ..	Taluka Local Board, Tando Bago.
	(7) Dero Mohbat ..	Taluka Local Board, Dero Mohbat.

S. 38-A (1). **G. N., G. D., No. 7830, dated 23rd February 1938 (B. G., Pt. I-A, pp. 132-134).**

Whereas in the opinion of the Government of Bombay it is in the interest of the inhabitants of the talukas or petas mentioned in column 2 of the Schedule hereto annexed that the taluka local boards mentioned in column 3 of the said Schedule should be abolished ;

Now, therefore, in exercise of the powers conferred by sub-section (*1*) of section 38-A of the Bombay Local Boards Act, 1923 (Bom. VI of 1923), the Government of Bombay are hereby pleased to direct that the said taluka local boards shall be abolished with effect from 1st April 1938 :—

Schedule.

Names of Districts.	Names of Talukas or Petas.	Names of Taluka Local Boards.
1	2	3
Ahmedabad ..	(1) North Daskroi ..	Taluka Local Board, North Daskroi.
	(2) South Daskroi ..	Taluka Local Board, South Daskroi.
	(3) Prantij	Taluka Local Board, Prantij.
	(4) Modasa ..	Taluka Local Board, Modasa.
	(5) Sanand ..	Taluka Local Board, Sanand.
	(6) Dholka ..	Taluka Local Board, Dholka.
	(7) Viramgaon ..	Taluka Local Board, Viramgaon.
	(8) Dhanduka ..	Taluka Local Board, Dhanduka.
	(9) Gogha ..	Taluka Local Board, Gogha.
Kaira ..	(1) Mehmedabad ..	Taluka Local Board, Mehmedabad.
	(2) Matar ..	Taluka Local Board, Matar.
	(3) Thasra ..	Taluka Local Board, Thasra.
	(4) Kapadvanj ..	Taluka Local Board, Kapadvanj.
	(5) Nadiad ..	Taluka Local Board, Nadiad.
	(6) Anand ..	Taluka Local Board, Anand.
	(7) Borsad ..	Taluka Local Board, Borsad.
Broach and Panch Mahals.	(1) Dohad ..	Taluka Local Board, Dohad.
	(2) Godhra ..	Taluka Local Board, Godhra.
	(3) Kalol ..	Taluka Local Board, Kalol.
	(4) Ankleshwar ..	Taluka Local Board, Ankleshwar.
	(5) Broach ..	Taluka Local Board, Broach.
	(6) Jambusar ..	Taluka Local Board, Jambusar.
	(7) Wagra ..	Taluka Local Board, Wagra.

Names of Districts.	Names of Talukas or Petas.	Names of Taluka Local Boards.
1	2	3
Thana ..	(1) North Salsette ..	Taluka Local Board, North Salsette.
	(2) Dahanu ..	Taluka Local Board, Dahanu.
	(3) Umbergaon ..	Taluka Local Board, Umbergaon.
	(4) Palghar ..	Taluka Local Board, Palghar.
	(5) Vada ..	Taluka Local Board, Vada.
	(6) Shahapur ..	Taluka Local Board, Shahapur
	(7) Murbad ..	Taluka Local Board, Murbad.
	(8) Kalyan ..	Taluka Local Board, Kalyan.
	(9) Bhiwandi ..	Taluka Local Board, Bhiwandi.
	(10) Bassein ..	Taluka Local Board, Bassein.
Ahmednagar ..	(1) Akola ..	Taluka Local Board, Akola.
	(2) Karjat ..	Taluka Local Board, Karjat.
	(3) Kopergaon ..	Taluka Local Board, Kopergaon.
	(4) Nevasa ..	Taluka Local Board, Nevasa.
	(5) Nagar ..	Taluka Local Board, Nagar.
	(6) Parner ..	Taluka Local Board, Parner.
	(7) Rahuri ..	Taluka Local Board, Rahuri.
	(8) Sangamner ..	Taluka Local Board, Sangamner.
	(9) Shevgaon ..	Taluka Local Board, Shevgaon.
	(10) Shirgonda ..	Taluka Local Board, Shirgonda.
East Khandesh ..	(1) Raver ..	Taluka Local Board, Raver.
	(2) Yaval ..	Taluka Local Board, Yaval.
	(3) Bhusawal ..	Taluka Local Board, Bhusawal.
	(4) Jalgaon ..	Taluka Local Board, Jalgaon.
	(5) Amalner ..	Taluka Local Board, Amalner.
	(6) Erandol ..	Taluka Local Board, Erandol.
	(7) Chopda ..	Taluka Local Board, Chopda.
	(8) Parola ..	Taluka Local Board, Parola.
	(9) Chalisgaon ..	Taluka Local Board, Chalisgaon.
	(10) Pachora ..	Taluka Local Board, Pachora.
	(11) Jamner ..	Taluka Local Board, Jamner.

Names of Districts.	Names of Talukas or Petas.	Names of Taluka Local Boards.
1	2	3
West Khandesh ..	(1) Dhulia ..	Taluka Local Board, Dhulia.
	(2) Sindkheda ..	Taluka Local Board, Sindkheda.
	(3) Shirpur ..	Taluka Local Board, Shirpur.
	(4) Sakri ..	Taluka Local Board, Sakri.
	(5) Nandurbar ..	Taluka Local Board, Nandurbar
	(6) Taloda ..	Taluka Local Board, Taloda.
	(7) Shahada ..	Taluka Local Board, Shahada.
	(8) Nawapur ..	Taluka Local Board, Nawapur.
Nasik ..	(1) Nasik ..	Taluka Local Board, Nasik.
	(2) Sinnar ..	Taluka Local Board, Sinnar.
	(3) Igatpuri ..	Taluka Local Board, Igatpuri.
	(4) Dindori ..	Taluka Local Board, Dindori.
	(5) Niphad ..	Taluka Local Board, Niphad.
	(6) Yeola ..	Taluka Local Board, Yeola.
	(7) Malegaon ..	Taluka Local Board, Malegaon.
	(8) Nandgaon ..	Taluka Local Board, Nandgaon.
	(9) Baglan ..	Taluka Local Board, Baglan.
	(10) Kalvan ..	Taluka Local Board, Kalvan.
	(11) Peint ..	Taluka Local Board, Peint.
	(12) Chandor ..	Taluka Local Board, Chandor.
Poona ..	(1) Junnar ..	Taluka Local Board, Junnar.
	(2) Indapur ..	Taluka Local Board, Indapur.
	(3) Khed ..	Taluka Local Board, Khed.
	(4) Sirur ..	Taluka Local Board, Sirur.
	(5) Purandhar ..	Taluka Local Board, Purandhar.
	(6) Bhimthadi ..	Taluka Local Board, Bhimthadi.
	(7) Haveli ..	Taluka Local Board, Haveli.
	(8) Mawal ..	Taluka Local Board, Mawal.
Satara ..	(1) Karad ..	Taluka Local Board, Karad.
	(2) Walva ..	Taluka Local Board, Walva.
	(3) Satara ..	Taluka Local Board, Satara.

Names of Districts.	Names of Talukas or Petas.	Names of Taluka Local Boards.
1	2	3
Satara—*contd.* ..	(4) Wai ..	Taluka Local Board, Wai.
	(5) Javli ..	Taluka Local Board, Javli.
	(6) Khanapur ..	Taluka Local Board, Khanapur.
	(7) Koregaon ..	Taluka Local Board, Koregaon.
	(8) Man ..	Taluka Local Board Man.
	(9) Patan ..	Taluka Local Board, Patan.
	(10) Khatav ..	Taluka Local Board, Khatav.
	(11) Tasgaon ..	Taluka Local Board, Tasgaon.
Bijapur ..	(1) Indi ..	Taluka Local Board, Indi.
	(2) Sindgi ..	Taluka Local Board, Sindgi.
	(3) Bijapur ..	Taluka Local Board, Bijapur.
	(4) Bagewadi ..	Taluka Local Board, Begewadi
	(5) Muddebihal ..	Taluka Local Board, Muddebihal.
	(6) Bagalkot ..	Taluka Local Board, Bagalkot.
	(7) Badami ..	Taluka Local Board, Badami.
	(8) Hungund ..	Taluka Local Board, Hungund.
Dharwar .	(1) Dharwar ..	Taluka Local Board, Dharwar.
	(2) Hubli ..	Taluka Local Board, Hubli.
	(3) Navalgund ..	Taluka Local Board, Navalgund.
	(4) Gadag ..	Taluka Local Board, Gadag.
	(5) Bankapur ..	Taluka Local Board, Bankapur.
	(6) Ranebennur ..	Taluka Local Board, Ranebennur.
	(7) Hangal ..	Taluka Local Board, Hangal.
	(8) Karajgi ..	Taluka Local Board, Karajgi.
	(9) Kalghatgi ..	Taluka Local Board, Kalghatgi.
	(10) Kod ..	Taluka Local Board, Kod.
	(11) Ron ..	Taluka Local Board, Ron.
Kanara ..	(1) Karwar ..	Taluka Local Board, Karwar.
	(2) Ankola ..	Taluka Local Board, Ankola.
	(3) Kumta ..	Taluka Local Board, Kumta.
	(4) Honawar ..	Taluka Local Board, Honavar.
	(5) Siddapur ..	Taluka Local Board, Siddapur.

Names of Districts.	Names of Taluka or Petas.	Names of Taluka Local Boards.
1	2	3
Kanara—*contd.* ...	(6) Sirsi ..	Taluka Local Board, Sirsi.
	(7) Yellapur ..	Taluka Local Board, Yellapur.
	(8) Haliyal ..	Taluka Local Board, Haliyal.
	(9) Supa ..	Taluka Local Board, Supa.
Kolaba ..	(1) Alibag ..	Taluka Local Board, Alibag.
	(2) Pen ..	Taluka Local Board, Pen.
	(3) Panvel ..	Taluka Local Board, Panvel.
	(4) Karjat ..	Taluka Local Board, Karjat.
	(5) Roha ..	Taluka Local Board, Roha.
	(6) Mangaon ..	Taluka Local Board, Mangaon.
	(7) Mahad ..	Taluka Local Board, Mahad.
Ratnagiri ..	(1) Dapoli ..	Taluka Local Board, Dapoli.
	(2) Khed ..	Taluka Local Board, Khed.
	(3) Chiplun ..	Taluka Local Board, Chiplun.
	(4) Sangameshwar ..	Taluka Local Board, Sangameshwar.
	(5) Ratnagiri ..	Taluka Local Board, Ratnagiri.
	(6) Rajapur ..	Taluka Local Board, Rajapur.
	(7) Deogad ..	Taluka Local Board, Deogad.
	(8) Malwan ..	Taluka Local Board, Malwan.
	(9) Vengurla ..	Taluka Local Board, Vengurla.

S. 80A **G. N., G. D., No. 7398, dated 28th November 1933 (B. G., Pt. I-A, p. 348).**

In exercise of the powers conferred by section 80-A of the Bombay Local Boards Act, 1923 (Bom. VI of 1923), the Government of Bombay is pleased to notify that the districts, mentioned in column 1 of the schedule hereto annexed, shall be the districts in which one-third of the net proceeds of the cess levied therein on and after the 1st December 1933 under section 95 of the said Act shall be utilized towards the improvement of communications in the irrigated tracts specified in column 2 thereof against the name of each district :—

Schedule.

Name of the district.	Irrigated tracts.
1	2
Ahmednagar	Kopergaon and Rahuri Talukas.
Nasik	Niphad, Malegaon and Baglan Talukas.
Poona	Indapur and Bhimthadi Talukas.
Satara	Karad and Walwa Talukas.
Sholapur	Pandharpur, Sangola and Malsiras Talukas.

G. N., G. D., No. 4202, dated 24th October 1925 (B. G., Pt. I, p. 2795). **S. 93 (1) (a)**

In exercise of the powers conferred by clause (*a*) of sub-section (*1*) of section 93 of the Bombay Local Boards Act, 1923 (Bom. VI of 1923), the Government of Bombay is pleased to notify the receipts obtained from the sale of minor agricultural rights disposed of by the Development Department in development schemes in the Bombay Suburban District as a charge, the sums payable on account of which shall be exempt from the levy of the local fund cess.

G. N., G. D., No. 6426, dated 16th November 1925 (B. G., Pt. I, p. 2954). **S. 93 (1) (a)**

In exercise of the powers conferred by clause (*a*) of sub-section (*1*) of section 93 of the Bombay Local Boards Act, 1923 (Bom. VI of 1923), the Government of Bombay is pleased to notify the water rates levied by the Development Department under the Bombay Irrigation Act, 1879 (Bom. VII of 1879), on the water works managed by that Department, viz., the Santa Cruz and Andheri Water Supply Schemes, as charges the sums payable on account of which shall be exempt from the levy of the local fund cess.

G. N., G. D., No. 4453-A, dated 19th August 1924 (B. G., Pt. I, p. 1862). **S. 93 (1) (a)**

In exercise of the powers conferred by clause (*a*) of sub-section (*1*) of section 93 of the Bombay Local Boards Act, 1923 (Bom. VI of 1923), the Government of Bombay is pleased to notify the following charges as those, the sums payable on account of which, shall be exempt from the levy of the local fund cess, namely :—

(1) Notice fees ;

(2) Expenses of sale under section 183 of the Bombay Land Revenue Code, 1879 (Bom. V of 1879) ; * * * * * *

(3) Proceeds from grass or grazing sold by auction from protected or other notified forest in charge of the Revenue Department which is treated as forest revenue ; and

(4) Proceeds from trees, *i.e.*, fruits, drywood, thorns and leaves, or sale of Government right in trees including toddy trees and also sale of the trees when realised by the Revenue Department from legally constituted forest.

G. N., G. D., No. 4453-B, dated 19th August 1924 (B. G., Pt. I, p. 1863). **S. 95**

In exercise of the powers conferred by section 95 of the Bombay Local Boards Act, 1923 (Bom. VI of 1923), the Government of Bombay is pleased to direct that one anna on every rupee of water-rate leviable under the provisions of the Bombay Irrigation Act, 1879 (Bom. VII of 1879), shall be levied for the purposes of the local fund.

G. N., G. D., No. 4453, dated 16th December 1925 (B. G., Pt. I, p. 3263). **S. 95**

Government are pleased to direct that the one anna cess referred to in Notification No. 4453-B, dated the 19th August 1924, is leviable on the water rate only and not on fines.

S. 95

G. N., G. D., No. 4453, dated 28th March 1928 (B. G., Pt. I, p. 600).

Government are pleased to direct that in the case of the Presidency proper a local fund cess under section 95 of the Bombay Local Boards Act, 1923, should be levied on both the water and occasional rates. * *

S. 133 (b) & (h) Bombay Local Boards Election Rules, 1932.

G. N., G. D., No. 4455, dated 25th November 1932.

Amended by G. N., G. D., No. 4445, dated 16th January 1933.
Amended by G. N., G. D., No. 9493, dated 4th January 1934.
Amended by G. N., G. D., No. 9493, dated 8th Nevember 1935.
Amended by G. N., G. D., No. 2101/33, dated 26th March 1938.
Amended by G. N., G. D., No. 9463, dated 16th February 1939.
Amended by G. N., G. D., No. 9463, dated 14th March 1939.
Amended by G. N., G. D., No. 9463, dated 24th January 1940.
Amended by G. N., G. D., No. 9463, dated 3rd July 1941.
Amended by G. N., H. and L. G. D., No. 4455-C, dated 28th May 1948.
Amended by G. N., L. S. G. & P. H. D., No. 5928/33, dated 14th February 1950.

In exercise of the powers conferred by clauses (*b*) and (*h*) of section 133 of the Bombay Local Boards Act, 1923 (Bom. VI of 1923), and in supersession of all previous notifications on the subject, the Government of Bombay is pleased to make the following rules regulating the elections of members of local boards :—

1. *Short title.*—These rules may be called the Bombay Local Boards Election Rules, 1932.

2. *Definitions.*—In these rules, unless there is anything repugnant in the subject or context—

(1) "the Act" means the Bombay Local Boards Act, 1923.

(2) "election agent" means the person appointed under rule 11 by a candidate as his agent for an election.

(2A) "reserved seat" means seat reserved for women or for any specified community or communities. All other seats shall be "unreserved seats".

(3) "Returning Officer" means any person appointed by the Collector as Returning Officer in respect of any election or part of an election in any constituency and includes any person deputed for the time being by such returning officer with the previous sanction of the Collector to perform any of his duties.

(4) "section" means a section of the Act.

(5) "voter" means a person qualified under the provisions of the Act to vote at an election of a local board.

2-A. When in any general constituency any seat is reserved for women or for any specified community or communities, only women or persons belonging to such community or communities for whom the seat is reserved shall be qualified to be chosen to fill such seat.

3. *Preparation of list of voters.*—(1) The list of voters kept under section 11 shall be prepared separately for each village in a constituency.

(2) The name of a voter shall ordinarily be entered in the list for the village in which he actually resides.

(3) When a voter does not actually reside, but has a place of residence, in a village in a constituency, the name of such voter shall be entered in the list for the village in which he has the place of residence :

Provided if the voter has a place of residence in more than one village in a constituency, the name of such voter shall be entered in the list for the village which he may select by an application made to the Collector under section 13.

4. *Revision of list of voters.*—At the time of the publication of a list of voters under section 12, the Collector shall also publish a notice in the manner prescribed for such publication, calling upon persons claiming to be voters to make applications, to him within one month from the date of such notice for revision of the list.

5. *Polling stations.*—(1) The Collector shall select for each constituency for which elections are to be held as many polling stations as he thinks necessary for recording the votes and determine the areas for which each polling station is established, and he shall publish at the time of publication of the list of voters in accordance with rule 4, the lists showing the polling stations so selected and the polling areas for which they have respectively been selected.

(2) The villages selected under sub-rule (1) for holding election in a constituency shall not be changed within eight weeks of the date fixed for an election, except with the sanction of the Commissioner.

6. *Fixing of stages of election.*—(1) The Collector shall fix—

(*i*) the date, hour and place for each of the following stages of an election namely, (*a*) receipt of nomination papers, (*b*) scrutiny of nomination papers (*c*) counting of votes, and

(*ii*) the date and hour for the recording of votes at the polling stations :

Provided that the date for receipt of nomination papers shall not be less than six weeks before the date fixed for the election.

(2) The dates, hours and places so fixed shall not be changed within eight weeks of the date fixed for an election except with the sanction of Government :

Provided that if the Collector is of opinion that it is necessary in the public interest to change the dates, hours or places so fixed and if there is not sufficient time for obtaining the previous sanction of the State Government to such change, the Collector may, for reasons to be recorded in writing, change such dates, hours or places. In every such case,the Collector shall forthwith forward a copy of his order and the reasons so recorded to the State Government through the Commissioner.

7. *Publication of dates, hours and places of election.*—(1) At least eight weeks before the date fixed under section 17 for an election, the Collector shall cause a written notice of the date so fixed and of the dates, hours and places fixed for the various stages of the election under rules 5 and 6—

(*a*) to be posted up in some conspicuous place in the office of the district local board, in the office of the Mamlatdar or Mahalkari of the Taluka or Mahal in which the election is to be held, and in the chavdi or such other public buildings as the Collector may select in every village in the constituency for which the election is held, and

(*b*) to be published at least in one daily or weekly vernacular newspaper, if any, published in the district or taluka, as the case may be.

(2) The Collector may also cause a notice of the various stages of the election to be published in any other manner that he considers fit.

8. *Nomination papers.*—Nomination papers in the form prescribed in Schedule III shall be supplied by the Collector to any voter asking for the same.

9. *Nomination of candidates.*—(1) On or before the date and at the time fixed under rule 6 for the receipt of nomination papers, a nomination paper completed in the prescribed form shall be delivered to the Returning Officer either—

(*i*) by the candidate accompanied by his proposer and seconder, or

(*ii*) by his proposer and seconder together.

(2) A nomination paper so delivered shall be subscribed by the candidate himself as assenting to the nomination and by two persons as proposer and seconder.

(3) Any person whose name is registered in the list for the constituency and who is not subject to any disqualification under the Act may subscribe a nomination paper as proposer or seconder. Any such person may subscribe as proposer or seconder as many nomination papers as there are vacancies to be filled up but no more.

(4) On receipt of a nomination paper the Returning Officer shall then and there, ascertain from the proposer and seconder whether they have willingly signed it. If the Returning Officer is satisfied that either of them have not signed willingly, he shall reject the nomination paper and record thereon his reasons for rejecting it. If a nomination paper is rejected under this sub-rule, the candidate may deliver a fresh nomination paper subject to all the conditions of this rule.

10. *Deposit on nomination.*—(1) On or before the date appointed for the nomination of candidates, each candidate shall deposit or cause to be deposited with the Returning Officer a sum of one hundred rupees in cash or in Government Promissory notes of equal value at the market rate of the day :

Provided that in a constituency in which a seat or seats is or are reserved for the representatives of Harijans. the Backward tribes or women, the sum to be so deposited by or on behalf of a candidate who is a Harijan or member of a Backward tribe shall be rupees twenty. No candidate shall be deemed to be duly nominated unless the deposit referred to in this sub-rule has been made.

(2) If a candidate by whom or on whose behalf such deposit has been made withdraws his candidature in the manner and within the time specified in rule 17 or it the nomination paper of such candidate is rejected, the deposit shall be returned to the candidate or any other person who made the deposit, as the case may be, and, if any candidate dies, before the commencement of the poll, such deposit shall be returned (*a*) if made by him to his legal representative, or (*b*) if not made by the candidate to the person by whom it was made.

(3) If a candidate by whom or on whose behalf such deposit has been made is not elected and the number of votes polled by him does not exceed one-eighth of the total number of votes polled divided by the number of members to be elected, the deposit shall be forfeited to the State Government :

Provided that in a constituency in which a seat or seats is or are reserved for the representatives of Harijans, the Backward tribes or women, the deposit made by or on behalf of a candidate who is a Harijan or a member or a Backward tribe or a woman shall not be forfeited unless the number of votes polled by such candidate does not exceed one-half of the fraction prescribed in this sub-rule of the total number of votes polled.

(4) For the purpose of sub-rule (3) the total number of votes polled shall be deemed to be the total number of counted voting papers, other than spoilt voting papers.

(5) A deposit made under sub-rule (1), if it is not returned under sub-rule (2) or forfeited under sub-rule (3), shall be returned to the candidate or any other person who made the deposit, as the case may be, as soon after the publication of the result of the election in the *Bombay Government Gazette* as may be practicable.

11. *Election agent.*—(*i*) The appointment of an election agent by a candidate is optional. If the candidate desires to appoint an election agent he shall make a declaration signed by him to that effect in writing stating therein the name, number on the electoral roll, and address of the person so appointed, and deliver it to the Returning Officer, either at the time of delivering the nomination paper or at any time before the election. No such declaration is necessary when the candidate is himself the election agent.

(*ii*) The appointment of the election agent may be revoked by the candidate at any time by a declaration in writing signed by him and lodged with the Returning Officer. Such revocation shall operate from the death on which it is so lodged. in the event of such revocation or the death of the election agent, whether such event occurs before or during the election, the candidate may appoint another person as an election agent and declare his name, etc., in writing to the Returning Officer.

(*iii*) No person who is disqualified under the Act to be a member of the local board shall be appointed an election agent.

12. *Scrutiny of nomination papers.*—On the date appointed for the scrutiny of nomination papers the candidate, their election agents, if any, one proposer and one seconder of each candidate, and one other person duly authorised in writing by each candidate, may attend at the appointed time and place and the Returning Officer shall give them all reasonable facilities for examining the nomination papers of all candidates which have been delivered at or before the time fixed under rule 6 and in the manner prescribed in rule 9.

13. *Disposal of objections : Rejection of nominations.*—(1) The Returning Officer shall examine the nomination papers and shall decide all objections which may be made to any nomination, and may, either on such objection or on his own motion, after such summary inquiry, if any, as he considers necessary, reject a nomination paper on any of the following grounds :—

(*i*) that the candidate is disqualified for election under the Act ;

(*ii*) that a proposer or a seconder is disqualified from subscribing a nomination paper ;

(*iii*) that there has been any failure to comply with any of the provisions of rule 9, 10 or 11 ;

(*iv*) that the candidate or a proposer or seconder is not identical with the person whose electoral number is given in the nomination paper as the number of such candidate, proposer or seconder, as the case may be ;

(*v*) that the signature of the candidate or of a proposer or seconder is not genuine or has been obtained by fraud.

(2) For the purposes of sub-rule (1)—

(*i*) the production of a certified copy of an entry made in the list of voters of any constituency shall be conclusive evidence of the right of the voters named in that entry to stand for election unless it is proved that the candidate is disqualified ;

(*ii*) where a person has subscribed whether as proposer or seconder a larger number of nomination papers than there are vacancies to be filled up, those of the papers so subscribed which were first received, up to the number of vacancies to be filled, shall be deemed to be valid.

(3) Nothing contained in this rule shall be deemed to authorise the refusal of the nomination of any candidate on the ground of any irregularity in respect of a nomination paper, if the candidate has been duly nominated by means of another nomination paper in respect of which no irregularity has been committed.

14. *Completion of scrutiny.*—(1) The Returning Officer shall endorse on each nomination paper his decision accepting or rejecting the same, and, if the nomination paper is rejected, shall record a brief statement of his reasons for such rejection.

(2) The scrutiny shall be completed on the day appointed in this behalf and no adjournment of the proceedings shall be allowed.

15. *Appeal against rejection of nomination papers.*—(1) On an application made by a candidate whose nomination paper has been rejected, the Returning Officer shall immediately grant the candidate a copy of the order rejecting the nomination paper.

(2) An appeal against the order may be made to the Collector within a week of the date of such order.

(3) If at the end of the week no appeal is made, the Collector shall forthwith inform the Returning Officer accordingly, or if an appeal is made the Collector shall communicate the result of the appeal to the Returning Officer as soon as possible.

15-A. *List of candidates duly nominated.*—On receipt of the information from the Collector that no appeal is made against the order rejecting a nomination paper or, if an appeal is made, of the communication of the result of such appeal by the Collector under sub-rule (3) of rule 15, the Returning Officer shall forthwith cause a list of duly nominated candidates, showing the symbol assigned by him to each candidate, to be prepared under his signature and to be affixed at some conspicuous place in his office or in the office of the Mamlatdar or Mahalkari, as the case may be, and at each polling station within the constituency. The Returning Officer shall also send a copy of such list to the Collector.

16. *Right to be nominated in two or more constituencies.*—When elections for two or more constituencies are to be held, one and the same person may, if he is otherwise duly qualified, be nominated as a candidate for election for each of such constituencies.

17. *Withdrawal of candidature.*—(1) At any time and at least three days before the date fixed for an election, a candidate may withdraw his candidature by notice in writing subscribed by him and delivered to the Returning Officer either by the candidate or by a person authorised by him in writing in that behalf. A candidate who has withdrawn his candidature shall not be allowed to cancel the withdrawal.

(2) On receipt of a notice of withdrawal, the Returning Officer shall cause a copy of it to be affixed to some conspicuous place in his office and at each polling station within the constituency.

18. *Procedure at uncontested elections.*—If at any election in any constituency there are no duly nominated candidates for reserved or unreserved seats, as the case may be, or if the number of such candidates is less than the number of such seats, or if the withdrawal by a candidate of his candidature under rule 17 has the effect of rendering the number of the remaining duly nominated candidates less than the number of such seats, the Returning Officer shall forthwith report the fact to the Collector or the Commissioner, as the case may be, for taking action under sub-section (*3*) of section 18.

19. *Further procedure at uncontested elections.*—(1) If at any election in any constituency, where no seat is reserved for women or for any specified community or communities the number of duly nominated candidates is equal to or less than the number of vacancies, or if the withdrawal by a candidate of his candidature under rule 17 has the effect of rendering the number of the remaining duly nominated candidates equal to or less than the number of vacancies, all such duly nominated candidates who have not withdrawn their candidature shall be deemed to be elected, and the Returning Officer shall forthwith make an order in writing signed and dated declaring such candidates to be elected. The Returning Officer shall also cause

the order to be affixed at some conspicuous place in his office or in the office of the Mamlatdar or Mahalkari, as the case may be, and at each polling station within the constituency. The Returning Officer shall send a copy of the order to the Collector.

(2) If at any election in any constituency, where a seat is or seats are reserved for women or for any specified community or communities, if the number of candidates qualified to be chosen to fill the seat or seats so reserved is equal to or less than the number of seats so reserved or if the withdrawal by the candidate of his candidature under rule 17 has the effect of rendering the number of candidates so qualified equal to or less than the number of seats so reserved, all such duly qualified candidates who have not withdrawn their candidature shall be deemed to be elected to fill the reserved seat or seats, and the Returning Officer shall forthwith make an order in writing signed and dated declaring such candidates to be duly elected. The Returning Officer shall also cause the order to be affixed at some conspicuous place in his office or in the office of the Mamlatdar or Mahalkari, as the case may be, and at each polling station within the constituency. The Returning Officer shall send a copy of the order to the Collector.

20. *Death of candidate before poll.*—If at any election in any constituency the number of duly nominated candidates for reserved or unreserved seats, as the case may be, exceeds the number of such seats and if a candidate who was duly nominated dies after the scrutiny of nomination papers and before the commencement of the poll, the Returning Officer shall, upon being satisfied of the fact of the death of the candidate, proceed in the same way as if the candidate had withdrawn his candidature under rule 17.

21. *Procedure at contested elections.*—(1) If at any election in any constituency where no seat is reserved for women or for any specified community or communities, the number of duly nominated candidates exceeds the number of vacancies, a poll shall be taken.

(2) If at any election in any constituency, where a seat is or seats are reserved for women or for any specified community or communities, and where the number of duly nominated candidates exceeds the number of vacancies, the number of candidates qualified to be chosen to fill a reserved seat or reserved seats is equal to the number of such seats, the candidate or candidates so qualified shall be declared by the Returning Officer to be elected under sub-rule (2) of rule 19 to fill the reserved seat or seats and a poll shall be taken only for filling the unreserved seat or seats.

(3) In cases other than those covered by sub-rules (1) and (2), a poll shall be taken for filling the vacancies.

22. *Presiding officers, polling officers and polling stations.*—(1) The Collector shall cause to be provided at every polling station a booth which shall consist of two parts, viz. (1) a polling room, and (2) a voting room with a screened partition.

(2) The Collector shall appoint a presiding officer to preside at each polling station to keep order thereat and to see that the election is fairly conducted. The Collector may also appoint such number of polling officers to assist the presiding officer as the Collector considers necessary.

(3) The village officers of each village within the constituency for which an election is held shall, unless prevented by sickness or other reasonable cause, be present at the election, from the beginning to the end thereof, and render the presiding officer such assistance as he may require in conducting it.

(4) There shall be affixed in some conspicuous place at every polling booth a copy of the voters' list pertaining to the polling station in which the booth is situate.

(5) The Collector may establish one polling station and appoint the same presiding and polling officers for elections to be held simultaneously.

23. *Form of voting papers.*—The voting paper shall be in the form prescribed in Schedule I and shall contain the names of all the duly nominated candidates in alphabetical order together with their respective symbols; the Returning Officer shall score out the name of any candidate who may have withdrawn or who has been declared elected under rule 19. The voting paper shall be made up into a bound book or books and shall be serially numbered, the serial number being printed on the foil and counterfoil of the back of the voting paper.

24. *Supply of ballot boxes and election materials.*—Every presiding officer shall be provided with a box for receiving the votes recorded at the polling station, a copy of the voters, list for the polling station, a bound book or books of voting papers in the form prescribed in Schedule I and such other materials as may be necessary for the purposes of the election.

25. *Sealing of ballot boxes.*—Before the commencement of the poll, the presiding officer shall show the ballot box empty to such candidates or their agents and such Government officials as may be present at the polling station, and shall then lock it up and seal it in such manner as to prevent its being opened without breaking the seal. The ballot box shall then be so placed in the voting room as to be within the presiding officer's view.

26. *Admission to polling booth.*—(1) The presiding officer shall admit to the polling room of the polling-booth (*a*) the candidates and one agent of each candidate (hereinafter referred to as the polling agent) appointed in writing by the candidate and authorised in that behalf by the Returning Officers, (*b*) the polling officers, the police, the village officers and other public servants on duty, (*c*) necessary attendants of infirm voters, and (*d*) such other persons as the presiding officer may from time to time admit for the purpose of identifying voters.

(2) The presiding officer shall regulate the admission of these persons to the polling room.

(3) No person other than the presiding officer and one voter at a time with one attendant if such voter is infirm and the attendant is necessary shall be permitted to enter the voting room.

27. *Voters to attend polling stations.*—Every voter desirous of recording his vote shall attend for the purpose at the polling station for the area relating to the voters' list in which he is entered on the date appointed for the election and between such hours as may be appointed by the Collector in this behalf under rule 6.

28. *Candidates and agent not to communicate with voters.*—(1) Candidates and their agents shall not speak to or address any voter in the polling room, but may only address the presiding officer in regard to objections to a voter on the following three grounds :—

(*i*) that his name is not on the list of voters of the constituency in respect of which the election is being held ;

(*ii*) that his claim to be a certain voter shown on the list of voters is false;

(*iii*) that he has already voted at the election.

(2) The presiding officer may cause any person contravening the provision of sub-rule (1) to be expelled from the polling room, and a person so expelled shall not be readmitted during the election.

29. *Issue of voting paper.*—No voting paper shall be issued before the opening hour or after the closing hour fixed for the recording of votes under rule 6 but any voter who has been given his voting paper before the closing hour shall be allowed to record his vote.

30. *Voting by proxy prohibited.*—There shall be no voting by proxy.

31. *Voting.*—(1) On receipt of his voting paper, the voter shall proceed to the voting room. He shall there mark in the space provided for the purpose in the voting paper one cross, and one cross only, opposite the name of each candidate for whom he wishes to vote. He shall have as many votes as there are members to be elected and the total number of crosses marked on the voting paper must not exceed the number of votes he has. After marking the paper, he shall fold it up so as to conceal his marking and put it, so folded up, in the ballot box.

(2) Only one voter shall be allowed in the voting room at a time and he shall leave the voting room immediately after recording his vote :

Provided that the presiding officer may, if he considers it necessary, permit an infirm voter to be accompanied by an attendant who may mark the voting paper for him.

32. *Assistance to voters.*—The presiding officer shall give such assistance as may be required to any voter who is under any disability which incapacitates him from voting in the manner prescribed.

33. *Voting by persons on duty at polling stations.*—(1) Any person on duty at a polling station at which he is not entitled to vote, may, if he is entitled to vote at any other polling station for that election, on production of a certification from the Returning Officer of the constituency for which he is entitled to vote together with a voting paper (both foil and counterfoil) of such constituency record his vote at the polling station at which he is on duty.

The name of the polling station at which he would otherwise have been entitled to vote shall be entered in the counterfoil of the voting paper, together with his number in the voters' list of the constituency in which that polling station is situated.

(2) All such voting papers shall be placed in an envelope and sealed by the presiding officer and returned with the certificate referred to in sub-rule (1) to the Returning Officer who granted the same for inclusion among the valid voting papers.

34. *Identity of voters.*—(1) When a voter presents himself at the polling station and is admitted in his turn into the polling room, the presiding officer or polling officer, if any, shall first ascertain from him by suitable questions his name, whether he is the person named in the list and whether he has already voted.

(2) When such officer is satisfied as to the correctness of the voter's name and that he has not already voted at that election he shall score out the voters' name from the voters' list and shall enter the voter's number and the constituency on the counterfoil of the voting paper. The voter shall then sign the counterfoil or if he is unable to sign shall make his thumb impression thereon. The officer shall then give the voter his voting paper.

(3) A voter refusing to answer any one of the questions referred to in sub-rule (*1*) shall not be supplied with a voting paper.

(4) The presiding officer shall decide any dispute as to the identity of any person claiming to be a voter.

35. *Tendered voting papers.*—If a person representing himself to be a particular voter entered in the list of voters applies for a voting paper after another person has voted as such voter, the applicant shall, after duly answering such questions as the presiding officer may ask, be given a voting paper and shall be entitled to mark the voting paper in the same manner as any other voter. Such voting paper shall be termed "Tendered Voting Paper" and shall, instead of being put into the ballot box, be given to the presiding officer and endorsed by him with the name of the voter and his number in the list of voters and shall be enclosed in a separate packet. A list which shall be in the form prescribed in Schedule II and which shall bear the heading "Tendered Votes List" shall be maintained of the voting papers so tendered. The person tendering such voting paper shall sign his name and address or affix thumb impression against the entry in the list.

36. *Spoilt voting papers.*—A voter who has inadvertently dealt with his voting paper in such a manner that it cannot conveniently be used as a voting paper may, on delivering it to the presiding officer and satisfying him of the inadvertence, obtain another voting paper in the place of the spoilt paper, and the latter shall, together with its counterfoil, be marked as cancelled.

37. *Closing of poll : Despatch of voting papers.*—(1) The presiding officer shall, as soon as practicable after the close of the poll, in the presence of the village officers and of any candidates or polling agents who may be present, make up into separate packets, endorsing on each a description of its contents, and seal with his own seal and the seal of any candidate or polling agent who may desire to affix his seal :—

(*i*) each ballot box in use at the polling station, unopened but with the key attached ;

(*ii*) the unused voting papers ;

(*iii*) the tendered voting papers ;

(*iv*) the spoilt voting papers ;

(*v*) the marked copies of the list of voters ;

(*vi*) the counterfoils of the used voting papers ; and

(*vii*) the tendered votes list.

(2) The packets shall be forwarded forthwith by the presiding officer to the Returning Officer and shall be accompanied by a statement showing the number of voting papers entrusted to him and accounting for them under the heads of voting papers in the ballot box, voting papers tendered, voting papers unused, voting papers spoilt and voting papers dealt with under rule 33.

38. *Who may be present at counting of votes.*—No person shall be allowed to be present at the counting of votes except the Returning Officer, such persons as he may appoint to assist him in counting the votes, the candidates and their election agents.

39. *Counting of votes.*—(1) On the day and at the time and p lace fixed under rule 6 for the counting of votes, the Returning Officer shall proceed as follows :—

(*a*) The ballot box or boxes relating to each polling station shall be opened one after another, and the Returning Officer shall take out the paper therefrom, count them or cause them to be counted and record the number thereof in a statement. Such statement shall not be shown to any candidate or election agent.

(*b*) The Returning Officer shall then mix together all the voting papers so taken out from the ballot boxes and distribute them in convenient bundles to the persons appointed to assist in counting the votes.

(*c*) When the voting papers have been so distributed, but not before the Returning Officer shall allow the candidates and their agents reasonable opportunity to inspect, without handling, the voting papers. The Returning Officer shall endorse the word "rejected" on every voting paper which is wholly or partially rejected. If any candidate or election agent present questions the correctness of the rejection, he shall also record, on the voting paper, the grounds for the rejection. No candidate or election agent shall be allowed to see the serial number on the back of any voting paper.

(2) The Returning Officer shall reject any voting paper if the number of votes recorded thereon exceeds the number of members to be elected or if more than one vote has been recorded in favour of any one candidate. The Returning Officer may also reject any voting paper if it bears any writing or mark by which, in his opinion, the voter intended to be identified or if it is void for uncertainty.

(3) He shall count or cause to be counted the votes given to each candidate other than tendered votes.

(4) He shall, upon the completion of the counting seal up in separate packet endorsing on each a description of its content, the voting papers counted and the voting papers rejected. He shall not open the sealed packets of the tendered voting papers, the marked copies of the list of voters and the counterfoil of used voting papers ; but shall open the packets of unused voting papers and the packet containing the tendered votes list and spoilt voting papers, and shall verify the voting paper account given by each presiding officer by comparing it with the number of voting papers counted or rejected as aforesaid, the unused voting papers and the tendered voting papers as shown in the tendered votes list. He shall re-seal each packet after examination and record on each packet a description of its contents and the date of the election to which it refers and submit the same together with the return mentioned in sub-rule (5) to the Collector without delay.

(5) He shall prepare and certify a return setting forth—

(*i*) the result of the verification referred to in sub-rule (4) ;

(*ii*) the names of the candidates for whom valid votes have been given ;

(*iii*) the number of valid votes given for each candidate ;

(*iv*) the number of votes declared invalid ;

(*v*) the number of tendered votes given ;

and shall permit any candidate or his election agent to take a copy of or an extract from the return.

(6) The Returning Officer may at any stage adjourn the proceedings under this rule after giving notice of the date and hour at which proceedings will be resumed to such candidates or their election agents as may then be present.

40. *Declaration of results.*—(1) When in a constituency where the seats to be filled by taking poll do not include any reserved seat the counting of the votes has been completed, the Returning Officer shall forthwith by an order in writing declare the candidate or candidates in each constituency to whom the largest number of valid votes has been given to be elected and shall submit a copy of his order without delay to the Collector. He shall at the same time cause a copy of the order to be affixed at some conspicuous place in the office of the Mamlatdar or Mahalkari, as the case may be.

(2) If the Returning Officer finds that (*a*) there is an equality of votes in favour of two or more candidates in a constituency who have the highest number of valid votes, or (*b*) there is no candidate with valid votes in some or all the constituencies he shall forthwith submit a detailed report to the Collector.

40-A. (1) When in a constituency, where the seats to be filled by taking poll include a reserved seat or reserved seats, the counting of votes has been completed, the Returning Officer shall, forthwith by an order in writing, first declare that one or those, of the candidates qualified to fill such seat or seats to whom the largest number of valid votes has been given to be elected to fill the reserved seat or seats and shall submit a copy of his order without delay to the Collector. He shall at the same time cause a copy of the order to be affixed at some conspicuous place in the office of the Mamlatdar or Mahalkari, as the case may be.

(2) If the Returning Officer finds that (*a*) there is an equality of votes in favour of two or more candidates qualified to be chosen to fill a reserved seat or seats in a constituency who have the highest number of valid votes or (*b*) there is no such candidate with valid votes in some or all such constituencies, he shall forthwith submit a detailed report to the Collector.

(3) The Returning Officer shall thereafter follow the procedure laid down in rule 40 as regards unreserved seats, if any, in the constituency.

41. *Publication of names of persons appointed under section 18.*—A copy of every order made by the Collector or by the Commissioner, as the case may be, under section 18 shall be in writing and dated and shall forthwith be affixed at some conspicuous place in the office of the Mamlatdar or Mahalkari, as the case may be.

42. *Multiple elections.*—(1) If any person is elected by more than one constituency of the same local board he shall by notice in writing signed by him and delivered to the Returning Officer within seven days from the date of the publication of the result of such election under section 21 choose for which of these constituencies he shall serve, and on such choice having been made, the result of the election shall, in every other constituency by which such person was elected, be determined as if no votes had been recorded for him.

(2) If such person does not make the choice referred to in sub-rule (*1*), the election of such person by all such constituencies shall be void and the results of the election by all such constituencies shall be determined as if no votes had been recorded for him.

43. *Custody of election papers.*—The Collector shall retain in his custody the return and the packets referred to in rule 37 and all other documents relating to the election.

44. *Production and inspection of election papers.*—(1) While in the custody of the Collector the packets of voting papers whether counted, rejected or tendered, and of the counterfoils thereof, shall not be opened and their contents shall not be inspected or produced except under the orders of a competent court; provided that if the packets of counterfoils of voting papers have not been destroyed under the provisions of rule 45 they may, on an application made to the Collector in that behalf, be opened and their contents may be produced or inspected after the expiry of the period allowed for making applications under section 19 (*1*).

(2) All other documents relating to an election in the custody of the Collector shall be open to public inspection.

45. *Destruction of election papers.*—On the expiry of fifteen days from the date of the declaration of the result of the election, or if any application regarding the election is made under section 19 and such application is not finally disposed of, before the expiry of the said fifteen days, then whenever such application has been finally disposed of, all the voting papers and all other papers relating to an election shall be destroyed.

Provided that if any application for production or inspection of the counterfoils of voting papers has been made under rule 44, such counterfoils shall not be destroyed till the applicant has had a reasonable opportunity of inspecting them.

46. *Casual vacancies.*—On receipt of a report from the President of a local board regarding the occurence of a vacancy under section 32 (*1*) of the Act, the Collector shall fix a date, as soon as conveniently may be, for the holding of a by-election to fill the vacancy. The above rules shall apply, with such modifications as may be necessary, to such by-election.

47. *Interpretation in case of doubt.*—If any question arises as to the interpretation of these rules, the question shall be referred for the decision of the Collector, and his decision shall be final.

SCHEDULE I.

Form of Voting Paper.

(*See* rule 23.)

District Local Board of

Voting paper.

Counterfoil

Serial No.

Outerfoil

(Front)

	Name of candidate	Cross ×	Symbol
1. Constituency	1		
2. No. of polling station.	2		
3. No. of voters' list	3		
4. Signature or thumb impression	4		
	5		

(Back of Outerfoil.)

Please read this carefully before recording your vote(s).

(1) You have.....vote(s).

(2) One cross means one vote.

(3) Do not put more than one cross opposite the name of anyone candidate.

(4) Do not put more than ..... cross(es) in all.

Serial No.

SCHEDULE II.

TENDERED VOTES LIST.

(*See* rule 35.)

District Local Board of

Polling Station.

Name of Constituency	Name of voters	Number in voters' List.	Number of votes recorded.	Signature or Thumb impression of voters.

SCHEDULE III.

Form of Nomination Paper.

(*See* rule 8.)

District Local Board of

Name of the Constituency for which the candidate is nominated

Name of candidate

Father's name

Age

Address

Denomination of candidate : (In the case of a constituency in which seat is reserved for Muslim, Harijans, Indian Christians, Backward Tribes, Anglo-Indians or Europeans and women state whether belonging to the community or communities for which the seat or seats are reserved. If Harijans or member of a Backward Tribe state the caste)

Constituency on the voters' list of which the candidate is registered as a voter.

No. of the candidate in the list of voters of the constituency in which he is registered as a voter

Name of proposer

No. of the proposer in the list of voters of the constituency

Signature of the proposer

Name of the seconder

No. of the seconder in the list of voters of the constituency

Signature of the seconder

Declaration by Candidate.

I hereby signify my willingness to serve if I am elected.

Date

Signature of Candidate.

Certificate of Scrutiny.

I have scrutinised the eligibility of the candidate, the proposer and seconder and find that they are respectively qualified to stand for election, to propose and to second the nomination.

Returning Officer or the authorised person.

APPENDIX A.

List of approved Symbols for Purposes of District Local Board Elections.

(1) Elephant ; (2) Bullock ; (3) Sword ; (4) Cart ; (5) Scales ; (6) Hand ; (7) Tree ; (8) Horse ; (9) Snake ; (10) Bird ; (11) Fish ; (12) Bicycle ; (13) Man ; (14) Ganpati ; (15) Moon ; (16) Sun ; (17) Tiger ; (18) Umbrella ; (19) Motor Car ; (20) Dog ; (21) Ship.

G. N., G. D., No. 4456, dated 24th January 1924. S. 133 (c).

Amended by G. N., G. D., No. 4456, dated 21st January 1926.

Amended by G. N., G. D., No. 4456, dated 15th November 1927.

Amended by G. N., G. D., No. 4456, dated 1st November 1928.

Amended by G. N., G. D., No. 4456, dated 15th January 1934.

Amended by G. N., G. D., No. 2101/33 dated 26th March 1938.

Amended by G. N., H. & L. G. D. No. 2662/33 (a), dated 25th July 1947.

Amended by G. N., G. D., No. 4456 dated 28th September 1948.

Amended by G. N., G. D., No. 2662/33 dated 3rd June 1949.

In exercise of the powers conferred by clause (c) of section 133 of the Bombay Local Boards Act, 1923 (Bom. VI of 1923), and in supersession of so much of Government Notifications in the Revenue Department, No. 9248, dated the 21st November 1884, and No. 78, dated the 7th January 1886, as subsequently amended, as relates to the manner in which the business of local boards shall be conducted, the Government of Bombay is pleased to make the following rules prescribing conditions as to the manner in which the business of local boards shall be conducted, namely :—

1. *Local Boards not to delegate certain powers and duties to Committee and President.*—The powers and duties of local boards prescribed by the sections of the Act, specified in clause (*a*) and the powers of local boards prescribed by section 47 (except in respect of dead stock articles) and specified in clause (*b*) shall be exercised and performed by local boards alone and shall not be delegated to any Committee appointed or President elected by them under the Act :—

(*a*) Sections 37, 38, 44, 46, 59, 62, 76, 86, 88 (*1*) 93, 94, 99, 100, 102, 103, 119 and 123 ; and

(*b*) (*i*) Power to acquire and hold immovable property except trees and grass ;

(*ii*) Power to sell or transfer, otherwise than by lease, immovable property except trees and grass ;

(*iii*) Power to acquire and hold moveable property ;

(*iv*) Power to enter into contracts the amount or value of which exceeds Rs. 2,500 ;

(*v*) Power to sue :

Provided that—

(*a*) the power to enter into contracts may be delegated to—

(1) the Standing Committee of District Local Boards as regards contracts the amount or value of which exceed Rs. 500 but does not exceed Rs. 5,000 ;

(2) the President, District Local Board, as regards contracts the amount or value of which does not exceed Rs. 500 ;

(3) the President, Taluka Local Board, as regards contracts the amount or value of which does not exceed Rs. 200 ;

(*b*) the power to acquire, sell or otherwise dispose of moveable property may be delegated to—

(1) the Standing Committee of District Local Board as regards moveable property the amount or value of which exceeds Rs. 200 ;

(2) the President, District Local Board, as regards moveable property the amount or value of which does not exceed Rs. 200 :

Provided further that Standing Committees of District Local Boards may approve and sanction reappropriations of funds in a budget estimate subject to any regulation made by the District Local Board in this respect under section 35 of the Act.

1-A. Notwithstanding anything contained in rule 1 all powers vested in the District Local Board shall be exercised by the President in consultation with the Engineer of the Board in respect of village water supply works entrusted by Government to the District Local Board for execution :

Provided that all tenders and contracts for works estimated to cost more than Rs. 5,000 but less than Rs. 10,000 each shall be sanctioned by the Standing Committee of the Board :

Provided further that tenders and contracts for works estimated to cost more than Rs. 10,000 each shall be sanctioned the Government Executive Engineer.

1-B. *Power to punish or dismiss the Chief Officer, Engineer, the Supervisor or the Accountant.*—Power to punish or dismiss the Chief Officer, the Engineer, the Supervisor or the Accountant shall be exercised and performed by local boards alone and shall not be delegated to any Committee appointed or President elected by them under the Act.

1-C. *Local Boards not to delegate certain powers and duties to Committees.*—The powers and duties of local boards prescribed by section 120 of the Act shall be exercised by local boards alone and shall not be delegated to any committee appointed by them under the Act.

2. *Correspondence by or with local boards.*—Correspondence by or with local boards shall be conducted through their respective presidents, or, if any local board appoints a chief officer or secretary, through such chief officer or secretary, provided that the media of correspondence between local boards and the Commissioner or the State Government shall be the presidents or vice-presidents of the district local board and the Collector of the district and such correspondence shall be in English or the regional language of the district.

3. *Suits by or against local boards.*—No taluka local board shall institute or defend a suit or other proceeding in any civil court without the previous sanction of the district local board to which it is subordinate.

No such sanction shall be given by a district local board and no suit or other proceeding in a civil court in which a district local board is itself concerned shall be instituted or defended, except under the authority of a resolution of the district local board passed at a general meeting thereof.

4. *Tenders to be publicly invited before contracts are entered into.*—(1) Before any contract for the supply of materials or for the execution of any work, the cost of which is estimated to exceed Rs. 2,500, is entered into by a local board, tenders shall

be publicly invited, by advertisement in one or more of the local newspapers, if any, and in such other manner as the board thinks fit, from persons willing to enter into such contract.

(2) The local board shall not bind itself, and shall not be bound to accept the lowest or any tender, but, as a rule, the lowest tender received from a trustworthy person shall be accepted.

G. N., G. D., No. 9394, dated 18th December 1935.

S. 133 (c), (f) & (h). Bombay Local Boards Account Code, 1935.

Amended by G.N., G.D., No. 2101/33, dated 26th March 1938.
Amended by G.N., G.D., No. 9394, dated 7th June 1938.
Amended by G.N., G.D., No. 9394, dated 10th September 1938.
Amended by G.N., G.D., No. 2662/33, dated 12th December 1938.
Amended by G.N., G.D., No. 2662/33, dated 7th February 1940.
Amended by G.N., G.D., No. 2662/33, dated 18th April 1941.
Amended by G.N., G.D., No. 2662/33, dated 8th June 1943.
Amended by G.N., G.D., No. 2662/33, dated 18th December 1944.
Amended by G.N., G.D., No. 2662/33, dated 21st July 1945.
Amended by G.N., H & L.G.D., No. 2662/33, dated 25th July 1947.
Amended by G.N., H. & L.G.D., No. 2662/33, dated 12th August 1949.
Amended by G.N., H. & L.G.D., No. 9394, dated 12th August 1949.
Amended by G.N., L.S.G. & P.H.D., No 2662/33, dated 20th February 1950.

In exercise of the powers conferred by clauses (*c*), (*f*) and (*h*) of section 133 of the Bombay Local Boards Act, 1923 (Bom. VI of 1923), and in supersession of the rules sanctioned in Government Resolution, General Department, No. 3666, dated the 27th September 1928, as subsequently amended, the Government of Bombay are pleased to make the following rules :—

THE BOMBAY LOCAL BOARDS ACCOUNT CODE.

TABLE OF CONTENTS.

Chapter.	Particulars.	Rules.
	Short title and commencement	1
I	Definitions	2
II	General Principles and Rules	3–47
III	Establishment	48–62
	Record of Service	63–68
	Provident Fund	69–72
	Pensions	73–89
	Travelling Allowance	90
	Contingencies	91–93
	Transfer of charge of Office	94–97
IV	Public Works Department—	
	General Principles	98–104
	Preparation of Estimates	105–115
	Approval of Estimates	116–118
	Execution of Works	119–130
	Contracts	131–140
	Measurements of Works	141–148
	Bills	149–160

Chapter.	Particulars.	Rules.
V	Miscellaneous	161–165
VI	Annual Budget Estimate	166–180
VII	Forms of Accounts and how to be maintained	181
	General Cash Book	182–187
	Classified Registers of Receipts and Payments	188–195
	Register of Cheques	196
	Treasury Pass Book	197
	Transfer Sheets	198–199
	Demand and Collection Register of Toll and Ferry Receipts	200–207
	Demands and Collection Register of other taxes	208–210
	Petty Cash Book	211–212
	Register of Deposits	213–216
	Register of Advances	217–218
	Register of Private Contributions	219
	Monthly Cash Account	220
	Annual Account	221–223
	Audit Register of Establishment and fixed recurring charges	224–233
	Travelling Allowance Register	234–236
	Pay bill of Permanent and Temporary Establishment	237–239
	Provident Fund Ledger	240
	Register of Pension Payment Orders	241
	Travelling Allowance Bill	242–245
	Contingent Bill	246–248
	Contingent Register	249–250
	Register of Permanent Advance made to Officers	251–253
	Register of Investments	254
	Register of Dead Stock	255–258
	Register of Works	259–268
	Account of Tools and Plant	269–270
	Road Side Materials (Metal, Sand, Marum and Ruble)	271
	Materials charged to Works	272–274
	Surplus Materials	275–276
	Stock	277–281
	Register of Immoveable Property	282
	Register of Securities	283
	Cattle Pound Register	284–290
VIII	Taluka Local Boards	291–292
IX	Dispensaries	293–294
X	Utilisation of the cess under section 95 of the Bombay Local Boards Act, 1923	295

CHAPTER I.

Short Title and Commencement.

1. (1) These rules may be called the Bombay Local Boards Account Code, 1935.
(2) These rules shall come into force from the 1st April 1936.

Definitions.

2. In these rules unless there is anything repugnant in the subject or context—

(*a*) "Act" means the Bombay Local Boards Act, 1923.

(*b*) "Auditor" means the Examiner or any other person empowered by the State Government to perform the functions of an auditor.

(*c*) "Bank" means such bank, other than the bank to which the Government treasury business has been made over, or such co-operative society as may be approved by the State Government under sub-section (*2*) of section 74.

(*d*) "Board" or "Local Board" means a District Local Board and includes a Taluka Local Board.

(*e*) "Close holiday". Whenever in these rules, any act or proceeding in the office of a local board is directed or allowed to be done or taken on a certain day or within a prescribed period, then, if the office is closed on that day or on the last day of the prescribed period the act or proceeding shall be deemed to have been done or taken in due time if it is done or taken on the next working day.

(*f*) "Code" means the Bombay Local Boards Account Code, 1935.

(*g*) "Commissioner" means the Commissioner of the Division.

(*h*) "Examiner" means the Examiner, Local Fund Accounts, Bombay, and includes the Assistant Examiner of Local Fund Accounts.

(*i*) "Form" means a form appended to the Code.

(*j*) "Head of Office": The Chief Officer, Engineer and Health Officer shall each be deemed to be the Head of office in regard to his respective Departments under the District Local Board.

(*k*) "President" means the President of a Local Board and includes the vice-president of a Local Board when acting for the President.

(*l*) "Proposition statement" means a statement setting forth the financial effect of a proposal involving the creation, alteration or abolition of an appointment on the establishment.

(*m*) "Re-appropriation" means the transfer of funds from one budget head to another.

(*n*) Recurring charge is a charge which involves a liability beyond the financial year in which it is originally sanctioned.

(*o*) "Section" means a section of the Act.

(*p*) Suspense Account is the head of account under which transactions of a temporary character, which are not to be adjusted forthwith in the accounts as final receipts or outlay or the correct classification of which cannot be determined, are recorded.

(*q*) "Treasury" means a Government Treasury or Sub-Treasury or a Bank to which the Government Treasury business has been made over and in which the local fund is deposited.

"Treasury Officer" includes a Sub-Treasury Officer or the Manager of such Bank.

(*r*) "Work": The term "work" when used by itself in a comprehensive sense applies not only to works of construction and repair, but also to other individual objects of expenditure connected with the supply, repair and carriage of tools, plant or other objects.

(*s*) "Year" means the financial year as defined in the Bombay General Clauses Act, 1904.

CHAPTER II.

General Principles and Rules.

3. (1) A Board shall not, without the previous sanction of the State Government, make any addition to, alteration in or modification of, any register or form prescribed in the Code or introduce any new form.

(2) A Board may, for administrative convenience, maintain such registers as may be auxiliary to the account books prescribed in the Code but such register will not be recognised as account books prescribed in the Code.

4. The accounts shall be maintained separately for each financial year.

5. The accounts shall be kept in English. A Taluka Local Board may, however, with the permission of the Commissioner, keep them in the vernacular of the district.

6. All books of accounts and registers shall be strongly bound. No accounts shall be prepared on loose sheets or in loosely bound volumes.

7. The pages of all account books shall be serially numbered and each page shall be stamped with the Board's seal. The pages of receipt books shall before issue be similarly stamped and the Chief Officer shall record on each book before issue a certificate of the number of pages it contains.

8. Every correction or alteration in accounts shall be made neatly in red ink (a single line being drawn through the original entry to be corrected) and attested by the dated initials of the Head of office. All corrections and alterations in bills and vouchers shall be similarly attested by the officer drawing the bill or person preferring the claim, while those in the pay orders shall be similarly attested by the officer signing them. Erasures shall be absolutely forbidden and no document with an erasure shall be accepted.

9. All money transactions to which any member, officer, or servant of a Board is a party in his official capacity shall forthwith and without any reservation be brought to account in the appropriate register and all moneys received by such member, officer or servant, shall be paid at once into the Treasury or Bank and shall form part of the local fund balance, provided that amounts of daily collections below Rs. 25 such as fees from patients as dispensaries, etc., should be credited at least once a month or whenever the balance exceeds Rs. 25. No portion of the collection shall on any account be kept back or used for current expenditure. Any person paying money into the Treasury or Bank for being credited to the Local Fund will present it with a chalan in triplicate showing distinctly the nature of the payment. One copy of the chalan shall be retained by the Treasury or Bank, the second copy shall be returned to the person paying the amount and the third copy shall be sent by the Treasury to the District Local Board in support of the credit in the Treasury Pass Book.

10. All moneys received in the office of a Board shall be acknowledged by a receipt in carbon duplicate (Form No. 6). If the amount exceeds Rs. 20 the receipt shall be stamped with a receipt stamp. The counterfoil of the receipt shall be signed by the person receiving the money and by the officer in charge of the accounts in token of its having been entered in the accounts and by the Chief Officer or in his absence by the Accountant. The head of account to which the amount is credited in the classified abstract shall be noted on the counterfoil of the receipt.

11. All sums received in the office or paid into the Treasury to the credit of the Local Fund shall be entered in the classified abstract of receipts under the appropriate head and the entries shall be initialled by the Accountant and the Chief Officer.

12. Any person having a claim against a Board shall present a voucher in the prescribed form duly receipted and stamped with a receipt stamp, if the amount of the claim exceeds Rs. 20.

13. Printed forms of bills in English shall, as far as possible, be used; when, for any reason, a vernacular form is unavoidably used, a brief summary of it shall be given in English, under the signature of the preferring officer, stating the amount, the name of the payee and the nature of the claim.

14. All bills shall be prepared and signed in ink. The amount of the bill shall, as far as whole rupees are concerned, be written in words as well as in figures; annas may, however, be written in figures after the words stating the number of rupees, but in case of there being no annas the word "only" should be written after the number of whole rupees. Care shall be taken to leave no space for interpolation as in the following example: "Rupees twenty-six only," Rupees twenty-five, 4/-.

15. Charges against two major heads shall not, as far as possible, be included in one voucher. No payment shall be made on a voucher or order signed by a person other than the Chief Officer or any other officer authorised by the Board to sign the payment order. No money shall be paid on a voucher or order signed with a rubber or facsimile stamp. When the acquittance on a voucher is given by a mark or seal or thumb impression, it shall be attested by some known person. Vernacular signatures shall always be transliterated.

16. All individual items of pay, pension, travelling allowance or contingent expenditure shall be calculated to the nearest anna, fractions below half an anna being omitted and half an anna or over being reckoned as one anna in the case of individual claims.

17. When a bill is presented on account of charges incurred under any special orders, the orders sanctioning the charge shall be quoted in the bill. Copies of sanctions accompanying bills shall be duly certified by the head of the office.

18. Every voucher shall bear or have attached to it an acknowledgment of the payment, signed by the person for whom or in whose behalf the claim is put forth. No payment shall be made in the absence of the necessary acknowledgment. If a voucher is lost a certificate of payment prepared in manuscript and signed by the disbursing officer and endorsed if necessary, by his superior officer shall be placed on record. Full particulars of the claims shall invariably be set forth.

19. Dates of payment shall whenever possible be noted by the payees in their acknowledgments. If for any reason, such as illiteracy or the presentation of a receipt in anticipation of payment, it is not possible to note the date of payment by the payee, the date of actual payment shall be noted by the disbursing officer under his initials either separately for each payment or by groups as may be convenient.

20. In the case of payments made by remittance through the Post Office, the postal money order receipt shall be kept with the voucher. In the case of payments for articles received by value payable post, the value payable cover together with the invoice or bill showing the details of the items paid for shall be kept with the voucher.

21. A claim for an amount not exceeding Rs. 100 preferred on behalf of a deceased person may be paid, without the production of a legal authority, under orders of the President after such enquiry into the right, title and interest of the claimant as may be deemed sufficient. In the case of claims exceeding Rs. 100 if the President is satisfied as to the right, title and interest of the claimant and considers that undue delay and hardship would be caused by insisting on the production of letters of

administration or other legal authority he may obtain the orders of the Board for payment on execution by the claimant of an indemnity bond with such sureties as the Board may fix.

In any case of doubt, payment shall be made only on production of a legal authority.

22. No duplicate or copy of a receipt granted for money received, or of a bill or other document for the payment of money which has already been paid, shall be issued on the ground that the original has been lost. If any necessity arises for such a document, a certificate may be given that on a specified day, a certain sum on a certain account was received from, or paid to, a certain person.

23. The holder of a permanent advance shall be responsible for the safe custody of the money placed in his hands and he shall at all times be ready to account for it by producing the relevant vouchers or cash or both.

24. When payment is to be made from the permanent advance, an endorsement of payment shall be made on the bill by the holder of the advance and it shall remain with him until he presents it for recoupment of the advance.

25. All bills presented for payment shall be examined by the Accountant who shall, if the claim is admissible, the authority good, the signature true and in order and the receipt a legal quittance, make an order to pay on the bill and submit it for signature to the Chief Officer or other officer appointed by the Board in this behalf. The order shall specify the amount payable both in words and figures.

26. After the payment order is signed, every bill shall be entered in the cheque register (Form No. 9), and cheques (Form No. 10) shall be prepared from this register.

27. After the cheques are signed by the President, endorsement of payment shall be written on every bill noting the number and date of the cheque in which the claim is included ; the voucher number and the head of account to which the expenditure is debited in the classified register shall also be noted on the enfacement of the bill.

28. Every bill shall also be posted in the classified abstract of expenditure under the appropriate head. The Accountant shall compare the entries in the classified abstract, the cheque register and the general cash book before the cash book is closed for the day.

29. Payments shall ordinarily be made by cheque, but claims below Rs. 100 may be paid from the permanent advance. Except in the case of claims by the State Government no cheque shall be issued for claims below Rs. 10.

30. If the Local Fund is deposited in a Government Treasury, sums due to the State Government shall be paid only by a cheque drawn on the Treasury. Whenever a cheque is so issued in payment of a claim, of the State Government it shall be accompanied by a chalan in duplicate in support of the credit. When it is proposed to adjust the amount due to the Board by the State Government against the amount due to the State Government by the Board, the President shall send to the treasury a receipted bill with a cheque and chalans for the amount due to the State Government. The Treasury Officer shall debit the bill and credit

to the local fund and debit the cheque to the local fund and credit to the State Government and make similar entries in the Treasury Pass Book.

If the Local Fund is deposited in any bank, the amount due to the State Government shall be credited in cash.

31. A District Local Board may make payments at a Sub-Treasury by means of a cash order or by a letter of credit if the funds are deposited in the Government Treasury. A Taluka Local Board shall draw cheques on a Sub-treasury or Bank in which its funds are deposited.

32. The District Local Board may determine whether all or specified classes of bills shall be sent by the Taluka Local Boards to the District Local Board for pre-audit before payment is made.

33. Cheques shall be in counterfoil and shall be bound in books. Each book shall bear a book number and each cheque therein shall bear the book number and the serial number both affixed by machine. The cheque books shall, on receipt, be carefully examined to see that the number of forms contained on each book is intact and a certificate of count shall be recorded on the fly leaf.

34. Th cheque books shall be kept under lock and key in the personal custody of the Chief Officer. He shall, from time to time notify to the Treasury Officer the number of the cheque book and the numbers of cheques contained therein as each book is brought into use.

35. (*a*) No cheque shall be signed unless it is required for immediate delivery to the payee or unless money is required for immediate payment. No cheque shall be drawn in favour of any person other than the actual payee except in the case of pay or travelling allowance of establishment contingencies or recoupment of permanent advance.

(*b*) A payment due to a contractor may made to an approved Bank if the contractor executes a power of attorney or transfer-deed in favour of the Bank. Cheques issued to a contractor may be made payable to order.

36. Every cheque shall have written across it in words at right angles to the type a sum, a little in excess of that for which it is issued. For example, across a cheque for Rs. 49-8-0 shall be written " Under Rupees Fifty ".

37. No cheque shall be current for more than three months from the date of issue. After the expiry of that period payment shall be refused at the Treasury and it shall be necessary for the payee to return the cheque for redating under the initials of the drawer, a note of the redating being made in the general cash book and cheque register against the original entries, provided the redating is done during the currency of the year in which the cheque was drawn. Such cheque if not redated till the end of the said year shall be considered as cancelled and a fresh cheque shall be issued when required.

38. When a cheque is cancelled, the fact of the cancellation shall be recorded on the counterfoil and on the cheque, if produced under the drawer's initials and also across the payment order on the bill or voucher.

39. Cancelled cheques shall be carefully preserved under lock and key in the custody of the Chief Officer, until the accounts for the period to which they relate

have been audited, when they shall be destroyed by the Auditor who shall certify on the counterfoil of each cheque that the cheque has been destroyed.

40. If a cheque is cancelled before the general cash book is closed for the day of issue, the entries in the cash book and cheque register or any other register in which the items included in the cheque may have been posted shall be struck out in red ink under the initials of the Chief Officer. When the cheque is cancelled after the cash book has been closed the amount shall be adjusted by minus entries under the corresponding expenditure heads in the classified registers and General Cash Book, a note being made in the cheque register and other registers in which the transaction may have been noted.

41. If a cheque is lost or destroyed an intimation of the fact shall be given at once to the Treasury or the Bank and its payment shall be stopped after ascertaining from the Pass Book or by enquiry at the Treasury or the Bank that the cheque has not been cashed. If a fresh cheque is issued, its number and date shall be quoted against the original entries in the general cash book and the cheque register with the remarks that the original cheque has been lost or destroyed and a note shall be made on the counterfoil of the fresh cheque as follows :—

"Issued in lieu of cheque No. dated $\frac{\text{lost}}{\text{destroyed}}$".

42. No cheque shall be presented at the Treasury or Bank for encashment by any servant of the Board unless it is issued in his name or is endorsed in his favour by any superior officer of the Board.

43. Deposits and advances shall be accounted for in the classified registers of receipts and expenditure under the suspense head. At the end of the year, the amount of outstanding deposits and advances shall be included in the balance of suspense accounts. When an advance is recovered by adjustment by deduction from a bill the full amount of the bill shall be debited against the appropriate head and the amount of advance recovered shall be taken as receipts. The actual amount paid shall appear in the cheque register but the full amount of the bill shall be shown in the classified abstract with a note of deduction in the remarks column.

44. Whenever an embezzlement of local board moneys, or loss of money by theft or otherwise is discovered, enquiry shall be made at once by the President and the fact of the embezzlement shall be immediately reported by him direct to the Examiner. Intimation shall also be sent to the Collector and Magistrate of the District. When the matter has been fully enquired into, the President shall send a complete report to the Collector and the Examiner showing the total sum of money misappropriated or lost, the manner in which it was effected and the steps taken to recover the money, to punish the offenders and to prevent the recurrence of similar embezzlement or loss.

45. Every claim against the Board shall be checked by the Accountant before payment. Any excess payment made in any bill shall be recovered in cash or by short payment from a subsequent bill of the payee.

46. Cash recoveries shall be brought to account by minus entries under the corresponding expenditure heads in the classified register and general cash book, provided the recovery is made in the same financial year.

47. The Accountant shall see that the rules and orders in force are observed in respect of all the transactions of the Board. If he considers that any transaction or order affecting receipts or payments is such as would be challenged by the Auditor or Examiner, it shall be his duty to bring it immediately to the notice of the Chief Officer through an objection book. Every entry in the objection book shall be signed by the Accountant. The Chief Officer shall also enter in the objection book any transaction which is, in his opinion, illegal or irregular and which is allowed by the President or the Board in spite of his protest.

CHAPTER III.

ESTABLISHMENT.

48. (*a*) The schedule of the local board staff prepared and sanctioned under section 119 of the Bombay Local Boards Act, 1923, shall be divided into sections. The establishments to be charged to different heads shall be regarded as distinct establishments and each such distinct establishment shall be shown in a separate section.

(*b*) There shall be a separate schedule for temporary establishment divided into similar sections.

49. Whenever any change, permanent or temporary, is proposed in the establishment of the Board the Chief Officers shall submit to the Board a memorandum explaining the proposals and the conditions which necessitated the change. The memorandum shall show—

(*i*) the existing strength and the cost of the whole or section or sections as the case may be of the establishment affected;

(*ii*) the strength and cost after revision;

(*iii*) the number and pay and other details of the posts which it is proposed to add or modify;

(*iv*) the ability of the Board to meet the additional expenditure from its normal income; and

(*v*) the date or dates from which the proposed changes are to take effect.

In cases of general revision of establishment the memorandum shall be accompanied by a proposition statement in Form No. 21A showing clearly the financial effect of the proposed changes.

50. Pay-bills other than those for the Veterinary or Medical dispensary staff may be signed at any time on the last working day of the month by the labour of which the pay is earned and are due for payment on the next working day. In the case of the dispensary staff the pay-bills may be signed three days before the close of the month for being sent to the District Local Board Officer for scrutiny and payment. In cases of dismissal, resignation or death, pay may be drawn and disbursed immediately after it becomes due. Pay or allowances may be drawn for the day of a man's death. The hour at which death takes place shall not affect the claim.

51. Pay-bills shall be prepared separately for each section of the permanent and temporary establishments. The names of both the substantive and officiating

incumbents shall be shown against each post. When pay is drawn for a broken period of the month only, the rate at which it is drawn and the period for which it is claimed, shall be clearly stated in the bill.

52. When pay or leave salary is withheld for future payment, the reasons for the same shall be briefly stated in the remarks column. When the amount is subsequently drawn on a supplementary bill, cross references to the supplementary and the original bill in which the charge was withheld shall be cited to prevent a second claim from being entertained.

53. Arrears of pay or allowances shall not be drawn in the ordinary monthly bill but shall be drawn in a separate bill, the amount claimed for each month being entered separately, quoting the bill from which the charge was omitted or withheld or on which it was refunded by deduction or of any special order sanctioning the payment with retrospective effect. Such bills may be paid at any time and may include as many items as may be necessary.

54. The monthly bills shall ordinarily be supported by an absentee statement if any member of the establishment was absent during the month on account of deputation or suspension or with or without leave other than casual leave.

55. Fines shall not be recovered in cash from the pay of establishments, but shall be shown in the column of fines in the pay-bill.

56. The following classes of recoveries only shall be made by deduction from pay-bills :—

(*a*) Fines imposed on members of the establishments,

(*b*) Recoveries on account of security deposits by employees,

(*c*) Recoveries on account of advances for the purchase of a conveyance or pony,

(*d*) Recoveries on account of attachment from a Civil Court for payment into a Court of Law,

(*e*) Recoveries on account of Provident Fund subscription,

(*f*) Recoveries on account of Provident Fund advance,

(*g*) Income Tax,

(*h*) Premia for Postal Insurance, and

(*i*) Pension contribution.

57. When the name of any person appointed either permanently or on probation appears for the first time in a pay-bill, in the case of a person previously holding another post, the last pay certificate and in the case of a person appointed for the first time, the health certificate shall be appended to the pay-bill.

58. The health certificate shall be in the form prescribed by the State Government for Government servants and may be signed by the Health Officer of the Board if there is one or by the Civil Surgeon of the District. In case of candidates for non-pensionable service, the health certificate may be signed by a medical officer in charge of local board dispensaries.

59. When a periodical increment is drawn for any servant of the Board in any pay-bill, it shall be supported by an increment certificate signed by the head of office,

60. The pay of establishment which is treated as a contingent charge shall not be included in pay-bills.

Note.—Rules 48 to 60 shall not apply to establishment charged to works.

61. Two cheques shall be drawn in payment of a pay-bill, one for the net amount payable to the persons whose names are shown in the bill and the other on account of the income-tax or Provident Fund deductions or pension contributions payable to the State Government.

62. The officer signing a pay-bill shall be personally responsible for all pay and leave salaries drawn thereon until the same have been paid to the proper recipients or refunded by short drawal in the next bill. When the payee is illiterate, his thumb impression or mark shall be attested by the disbursing officer. Pay and leave salary shall be disbursed by the Chief Officer or in his absence by the Accountant or by a person authorised by the Board in this behalf. If in any case it is not convenient to obtain the payee's receipt on the bill itself, a separate receipt (Form No. 38) may be obtained and attached to the bill.

RECORD OF SERVICE.

63. Service books or rolls shall be maintained for all the employees in the permanent service of the Board in the forms in use for Government servants. The service books and rolls shall be kept in the custody of the Accountant.

64. The service book or roll is a contemporary record of the employee's official life and shall show leave of every description other than casual leave enjoyed by the employee, periods of suspension from employment and other interruptions of duty with full details of the duration of each suspension and interruption and also warnings and fines. Every entry relating to the aforesaid items shall be written across the pages and attested by the Chief Officer. The entries relating to the service of the Chief Officer, the Engineer or the Health Officer shall be attested by the President or Vice-President of the District Local Board.

65. It shall be the duty of every employee to see that his own service book is properly written up-to-date and attested. He shall sign the service book periodically, at least once in every three years.

66. (1) All Local Board employees who are entrusted with the custody of cash or stores shall be required to furnish security. The amount of security to be furnished by each employee shall be determined by the Board according to the circumstances of each case. An employee required to furnish security may at his option deposit cash in lump sum or by monthly deductions from pay-bill or deposit Government paper or execute a bond.

(2) If a bond is executed the number of sureties shall be one or more at the option of the employee if the amount of security does not exceed five hundred rupees; but the number of sureties shall not be less than two, when the amount of security exceeds five hundred rupees.

(3) The Chief Officer shall carefully scrutinize the securities and satisfy himself as to the sufficiency when they are first offered and thereafter at least once a year. If he considers any of the said securities to be insufficient, he shall require the person

concerned to furnish additional or fresh security. He shall take care to see that the same person is not accepted as surety on behalf of a disproportionately large number of officers or servants.

67. No employee shall ordinarily hold a larger amount in his custody than that for which he has furnished security.

68. The Chief Officer shall maintain a register of securities furnished by each employee and at the beginning of every financial year he shall make enquiries about the existence and solvency of the sureties and record a certificate against each entry that the sureties are solvent and alive.

PROVIDENT FUND.

69. When a Board has with the sanction of the State Government established a Provident Fund the subscription of employees to such Fund shall be recovered monthly by deduction from the pay bills.

70. The contribution and the interest due on subscriptions payable by the Board shall be adjusted in the Board's accounts on the 31st March of every year or adjusted in accordance with the regulations framed by the Board in this behalf under section 123(*g*) and approved by the State Government.

71. The account of each subscriber shall be kept separately and shall show the amount of his subscription, the Board's contribution and the interest accrued thereon.

72. After the close of every financial year, the Chief Officer shall, as soon as may be practicable, send or cause to be sent to each subscriber a statement of his account showing the opening balance, the deposits and withdrawals during the year and the closing balance and interest made up to 31st March. Every subscriber shall satisfy himself as to the correctness of the statement and unless errors are brought to the notice of the Chief Officer within one month from the date of the receipt by the subscriber of the statement, the Board shall not be responsible for any amount not included in the account.

PENSIONS.

73. When a Board makes a permanent arrangement for contributing for pensions payable by the State Government for its permanent employees, or for any specified class or classes of them by paying to the State Government, contribution, at a rate fixed by the State Government from time to time, the amount of contribution payable to the State Government shall be added to the establishment bill and shall be paid from the Local Fund by credit to the State Government at the time the establishment bill is cashed. Such persons shall on retirement receive their pensions from the State Government unless the Pension Fund is transferred to the Board.

74. On 1st April of each year or soon thereafter, but not later than 15th May, the District Local Board shall send to the Examiner, in the forms prescribed for similar returns of Government establishments, a statement of its establishment as it stood on 1st April. Annual returns of Local Board establishment for which no contribution is paid and for which separate arrangements for pension fund are made shall be separately prepared and filed in the District Local Board Office.

75. Where a Board has framed its own pension regulations which are approved by the State Government, the pensions of its employees shall be regulated in accordance with such regulations.

76. When a Board establishes its own pension fund, an amount fixed by regulations framed under clause (*f*) of section 123 shall be drawn along with the pay every month and credited to the said fund.

77. The amounts drawn for credit to the pension fund shall be debited to the sub-head "Pensions" under the major head "Superannuation".

78. Pensions payable to the retired employees shall be debited to the pension fund and not to the general local fund. No amount from the Pension Fund shall be spent for any other purpose without the previous sanction of the State Government.

79. A separate account shall be maintained for the pension fund showing the the credits, debits and balance in the form of the general cash book.

80. Pensions payable wholly or partly by the State Government shall be sanctioned by the Board on obtaining a report from the Accountant General. A copy of such sanction shall be sent to the Accountant General for issue of a pension payment order.

81. Pensions payable wholly by a Board shall be sanctioned by the authority competent to fill the appointment held by the pensioner. The advice of the Accountant General shall be sought in those cases only where Government Pension Rule are wholly followed. In such cases, the pension payment order shall be issued by the President.

82. Where pension is payable partly by a Board and partly by the State Government, the Treasury Officer shall forward to the President an attested copy of the pension payment order. For the Board's share of pension, a separate bill shall be presented and paid in accordance with the provisions of rule.

83. If the pension is payable at the District headquarters, a bill in the form prescribed for pensions payable from Government revenues, shall be presented at District Local Board office for scrutiny and payment.

84. The Chief Officer shall identify the pensioner, check the claim against the sanctioning order, pay it either out of the permanent advance or by cheque and initial the note of payment on both halves of the pension payment order.

85. Where pension is payable at Taluka Headquarters, the pension payment order shall be forwarded to the President of the Taluka Local Board, for payment and the pension shall be paid at the Taluka Local Board office from the permanent advance in the first instance. The pension bill shall then be sent to the District Local Board for recoupment of the amount to the Taluka Local Board by cheque.

86. Pensions not exceeding Rs. 50 per month, may, at the pensioner's option, be remitted by money order as under :—

(*a*) The pensioner shall on the first occasion personally present his half of the pension payment order together with a declaration that he desires to have his pension remitted to him by money order.

(*b*) The Chief Officer shall after identifying the pensioner, place the declaration and both halves of the pension payment order in a separate file. On or before the 5th of each month, the Accountant shall make out a money order for the pension deducting money order commission therefrom, shall make necessary entries in the pension payment order and shall submit the money order and the pension payment order along with the register to the Chief Officer, who shall sign the money order and initial the entries on the pension payment order after carefully comparing the three documents.

(*c*) As a protection against fraud the Chief Officer shall compare the signature on the money order receipt every month with the pensioner's recorded specimen signature.

87. Every pension bill which is not personally presented shall be accompanied by a life certificate. When payment is made on a life certificate it shall be made only for one or more complete months prior to the date of the certificate.

88. A life certificate submitted under rule 87 must be signed by the nearest District Local Board or Taluka Local Board member or by the Police Patil, or any person exercising the powers of a Magistrate or the Registrar or Sub-Registrar under the Indian Registration Act, 1908, or any pensioned officer who before retirement exercised the powers of a Magistrate, or a Chaplain, or any gazetted officer of Government. The Chief Officer shall also satisfy himself every six months in such other manner as he considers necessary that the pensioner is alive.

89. At the beginning of each month, the Chief Officer shall record the following certificate :—

> " Certified that I have satisfied myself that all pensions included in the register for the previous month have been paid in the previous month and that money order receipts from the payees in support of these payments have been duly filed. "

These certificates shall be kept in a separate file and shown to the auditors during audit.

Travelling Allowance.

90. Claims for travelling allowance payable to Local Board members shall be regulated by the rules sanctioned by the State Government and those for the members of the establishment shall be regulated by the regulations framed by the Board in this behalf.

Contingencies.

91. Contingencies comprise such charges as are incidental to the management of an offence.

92. A lump sum shall be allotted by the Board within which the heads of offices may, without further sanction, incur expenditure as may be required. No pay of any kind and no additions to pay shall be charged as contingent expenditure.

93. No charge which binds the Board beyond a single payment shall be incurred without the sanction of the Board as contingent expenditure. Recurring charges such as rent of a building or land occupied for Local Board purposes, Municipal

or Cantonment taxes, assessment payable to the State Government and small monthly payments for supplying drinking water or for sweeping offices, and such other petty items may, however, be incurred by the heads of offices provided the total allotment is not exceeded. Such charges may be debited to contingencies.

TRANSFER OF CHARGE OF OFFICE.

94. Every transfer of charge of the President shall be reported to the Treasury or Bank with the specimen signature of the relieving officer.

95. In the case of transfer of charge of the stipendiary officers, the account of permanent advance, if any, shall be closed on the date of transfer and a note recorded in it over the signature of both the relieved and the relieving officers showing the cash on hand and the unrecouped vouchers made over and received by them, respectively.

96. In the case of transfer of charge of the Public Works staff, the officer to be relieved shall prepare a complete list of the balance of stock, tools and plant and other stores under his charge and the cash in hand. The relieving officer shall, then, unless otherwise ordered, proceed with the officer to be relieved to inspect the stores, works and materials at site. He shall also examine the accounts, count the cash on hand, inspect the stores, and count, weigh and measure certain selected articles in order to test the accuracy of the entries in the list and should minutely inspect the works in progress as to their quality. The time spent on inspection of works by both the officers shall be considered as on duty and both shall be entitled to pay and allowances for such period.

97. The relieved officer shall in every case furnish the relieving officer with a complete statement of all unadjusted claims with reasons therefor and a report as to any complications likely to arise owing to their non-adjustment.

CHAPTER IV.

PUBLIC WORKS DEPARTMENT.

General Principles.

98. Where a District Local Board has not employed an Engineer, the Board shall appoint the Chief Officer or any other stipendiary officer of the Board to exercise the powers and perform the duties of the Engineer. Where there is no Sub-Divisional Officer of the Board, the Board shall appoint the Engineer if one is employed or a stipendiary Officer of the Board to perform the duties and exercise the powers of the Sub-Divisional Officer, subject to such restrictions as it may impose.

99. The Chief Officer shall maintain a register of projects in which shall be entered all the proposals for new work. All the proposals in the register shall be placed before the Board for selection of works and for according administrative sanction. Before according administrative sanction to any project, the Board shall ascertain from the Engineer the approximate cost of the entire project and shall consider its utility, urgency and the means available to finance the project. Any project which is beyond the means of the Board to finance shall not be undertaken.

100. In financing any work, the Board shall consider whether it is possible to provide the full requisite amount in one year. If for want of funds, the full amount cannot be provided for in one year, the Board shall, in consultation with the Engineer, fix a programme as to the items to be carried out every year. In fixing the programme, care shall be taken to see that the items to be executed are not damaged and the amount spent on them is not wasted.

101. Repairs shall ordinarily be given precedence over original works. Adequate provisions shall be made for the due prosecution of works in hand at the close of the previous year. Past expenditure shall not be allowed to go to waste by neglect to maintain the existing works or to complete the unfinished works.

102. In order to enable the Board to make adequate provision for the upkeep of the existing works, the Engineer shall state his full requirements for the year in the month of January. Whenever necessary, he may submit proposals for reappropriations of allotments sanctioned for one work to another, explaining the necessity for such reappropriations and the effect of such reappropriations not being made.

103. The sanction accorded to current repairs estimates shall lapse at the end of the year ; but the sanction accorded to special repairs or original works shall hold good till the repairs or works are completed.

104. The sanction accorded for the allotment of funds shall continue in force till the end of the year to which it pertains. In the case of original works and special repairs, however, the Standing Committee or the Board may, after calling for a statement of incomplete works at the end of the year and of the probable amount required for completion, sanction a reallotment of that amount so that the works may be proceeded with in the next year. Such sanctioned re-allotments shall be included in the first supplementary budget.

Preparation of Estimates.

105. To facilitate the preparation of estimates, a schedule of rates for each taluka for each item of work commonly executed shall be prepared by the Engineer in the month of October every year and sanctioned by the President, District Local Board. Copies of such schedule shall be supplied to the respective taluka local boards.

106. Plans and estimates for original works shall be prepared only after the Board accords administrative sanction to a project and the President passes an order therefor. The Board's resolution according administrative sanction shall always be quoted on the estimate.

107. The estimate shall be prepared generally in the forms used in the Public Works Department of Government (Nos. 42 and 43). The Engineer may however make additions or alterations in the headings on the face sheets according to requirements. In preparing the estimates, the instructions given in the Public Wosks Departments Hand Book shall, as far as possible, be followed.

108. The estimates shall provide for the complete work and not piece-meal work. The cost of the work shall generally be calculated at the rates given in the schedule of rates and if for any reason those rates are not considered adequate and higher rates are necessary, a detailed statement showing the manner in which he rates entered in the estimates are arrived at shall be appended to the estimate.

109. All incidental expenditure, which can be foreseen, shall be provided for in the estimate. Provision may be made to the extent of 5 per cent. of the total charges for unforeseen contingencies. The provision for unforeseen contingencies shall not be diverted to any new item, not provided for in the estimate, without the sanction of the authority which sanctioned the original estimates.

110. The annual repair estimates for buildings shall also provide for rates and taxes payable in respect of the buildings and for pay of the watchmen or keepers, if any.

111. Annual repair estimates to roads shall be based on a mileage rate varying according to the nature of road, nature of the country through which it passes, and the importance of the road for traffic. The mileage rates shall be fixed by the Engineer of the District Local Board.

112. The repair estimates to buildings shall be for fixed amounts based on a percentage of the cost of the building, the nature of the work and the use to which the building is put. These rates shall be fixed by the Engineer of the District Local Board from time to time.

113. When the original estimate is likely to be exceeded for any reason or when a change of design or plan is necessary, revised estimate shall be prepared as soon as the necessity arises and before the completion of the work.

114. If a work is abandoned after partial execution and is proposed to be taken up again, a fresh estimate shall be prepared before the work is restarted.

115. Deviations (Form No. 44) from the sanctioned estimate which do not necessitate the preparation of a revised estimate may be carried out with the sanction of the Engineer. Such deviations shall however be shown in a statement to be kept on record with the sanctioned estimate.

Approval of Estimates.

116. Estimates for construction of new roads costing on an average more than Rs. 300 per mile and estimates for other works costing more than Rs. 3,000 shall require technical sanction of the Board's Engineer if his appointment is approved by the State Government, otherwise of the Government Executive Engineer. All such estimates shall require the administrative approval of the Board. Estimates for repair works of a District Local Board shall require the technical sanction of the Boards' Engineer and the administrative approval of the District Local Board. If the Board has no Engineer, all works except those for which the technical sanction of the Government Executive Engineer is necessary shall be approved technically and administratively by the Board or by an authority to which the Board has, in accordance with the provisions of the Act and the rules thereunder, delegated its powers in this his connection.

117. Estimates for repairs to Taluka Local Board roads costing on an average more than Rs. 50 per mile and estimates for repairs to other works shall require the technical sanction of the Board's Engineer and the administrative approval of the Taluka Local Board. Where there is no Engineer, the technical sanction as well as the administrative approval of the Taluka Local Board shall be necessary. Other estimates may be approved by the Taluka Local Board both technically and administratively.

118. The authority granted by an approval to an estimate for any original work shall be strictly limited to the precise object for which the estimate was intended to provide. Any anticipated or actual saving on an approved estimate shall not be applied to carry out additional work not contemplated in the original plan and estimate for the work. The originals of the approved estimate, whether original or revised, and deviation statements shall remain with the Accountant.

Execution of Works.

119. No work shall be commenced without proper authority. An order to prepare an estimate is no authority for execution and no work shall be commenced or expenditure in connection with it incurred until funds are provided.

120. With regard to the execution of works verbal orders shall not be given, but where such orders are given, they shall be confirmed in writing as soon as possible.

121. Works may be carried out departmentally or by contract. Works to be carried out departmentally may be got done by (1) daily labour, (2) rate list or (3) piece work. The Board or any authority to which the Board has delegated its powers in accordance with the provisions of the Act and the rules thereunder, may, after consulting the Board's Engineer, decide which particular system should be adopted in carrying out any work.

122. When any work is done by daily labour, a muster roll (Form No. 33) shall be maintained in the prescribed form by the official in charge of the work.

123. The muster roll which is the initial record of the labour employed each day on a work shall be written up daily by the subordinate deputed for the purpose. If mile coolies are engaged on monthly wages, it is not necessary to maintain a muster roll but payment shall be made on a monthly bill with a certificate recorded thereon by the overseer in charge of the work that the mile coolies were on duty for the period for which the payment is charged.

124. Morning reports (Form No. 46) showing the number of labourers employed on each work on each day shall, as far as possible, be sent to the Sub-Divisional Officer or the Engineer, as the Engineer may direct as soon as the labourers commence work in the morning of the day to which they relate. These reports shall be used to check the muster rolls when presented for payment. Labour employed daily may be checked as often as practicable by the Engineer, Sub-Divisional Officer or Overseer.

125. A separate muster roll shall be maintained for each work which has been separately estimated for. All forms of the muster shall bear the name of the work for which the muster is issued and shall be numbered, sealed with the Board's seal and signed by the Engineer or Sub-Divisional Officer before issue. An account of such forms issued shall be maintained in the office of issue.

126. Whenever the muster is closed the work turned out shall be measured. The description of the work shall be lucid so as to admit of easy identification and check. Where the work turned out is not susceptible of detailed measurements, such measurements may be dispensed with and payments may be made on the certificate of the Officer in charge of the work to the effect that the work turned out is commensurate with the amount spent thereon.

127. Rate lists (Form No. 41) shall be sanctioned by the Engineer. The rates allowed shall not ordinarily exceed those provided in the estimates. If higher rates are sanctioned for any item of work, the Engineer shall record on the sanctioned rate list the reasons for the higher rates. A copy of the sanctioned rate list shall be supplied to the Accountant.

128. When a work is to be done by piece-work only a rate shall be agreed upon with a particular individual without any reference to the total quantity of work to be completed.

129. Tenders (Form No. 45) shall ordinarily be invited publicly for all works given out by piece-work in such manner as the Engineer may deem suitable. Such tenders shall be in the prescribed form.

130. Original works costing more than Rs. 2,500 shall not be given by piece-work or on rate list without the special sanction of the Board.

Contracts.

131. In the case of original works estimated to cost more than Rs. 2,500, tenders shall be publicly invited by advertisement in one or more local newspapers, if any, and in such other manner as the Board thinks fit. In the case of works costing not more than Rs. 2,500, tenders may be invited in such manner as the Engineer thinks fit.

132. Whenever a work is to be given by contract, the following particulars shall invariably be furnished to intending contractors :—

(*a*) Name of work with the amount of estimate.

(*b*) The time that would be allowed for completion of the work.

(*c*) When and where the tender forms with schedules of quantities and specifications will be supplied and at what price.

(*d*) When and where the tenders should be submitted.

(*e*) When and where and by whom the tenders will be opened.

(*f*) The amount of earnest money to accompany tender.

(*g*) The amount and nature of security required in case the tender is accepted, and

(*h*) with whom the acceptance of tender will rest.

Power to reject any or all the tenders so received shall always be reserved.

133. The amount of earnest money to be deposited with a tender shall be fixed by the Engineer in each case and shall be sufficiently large to be a security against loss, in case the contractor fails to furnish the required security within the appointed time after the acceptance of his tender.

134. The earnest money received with the tenders shall be credited to the Petty Cash Book and shall be refunded to the party whose tender is not accepted. If the tender is accepted, the earnest money shall be taken to form part of the security deposit and transferred to the deposit register.

135. Security shall in all cases be taken from every contractor for the due fulfilment of the contract and shall be either in the shape of a lump sum to be fixed by the Engineer or a deduction of 10 per cent. made from the bills payable to the

contractor. Such security shall be returned to the contractor, only after completion of the work and full satisfaction of the Board's claim against him. The amount of security shall be credited to the register of deposit.

136. For every work given out on contract, an agreement on stamped paper shall be taken and executed in accordance with section 42.

137. Every sanctioned contract shall be entered in a register and each entry shall be initialled by the Accountant. Payments made to contractors from time to time shall be noted in the register under the initials of the Accountant.

138. Time for commencement and completion of the work shall be mentioned in the agreement; and power shall be reserved therein to the Board or the Engineer for cancellation of the contract, and for getting the work done by any other agency at the cost of the contractor in case of failure on the part of the contractor to commence the work in time or to keep it in progress with due diligence; provision shall also be made in the agreement for imposing a penalty for breach of any conditions of the agreement.

139. (1) Works shall be executed strictly in accordance with the specifications given in the approved estimates. The terms of every agreement shall be strictly enforced and nothing shall be allowed to be done tending to nullify or vitiate any agreement.

(2) A contractor shall not be given a verbal promise of being allowed higher rates than those agreed upon in consideration of any peculiar or unforeseen circumstances. If in any case higher rates are considered necessary, specific orders of the Board shall be obtained.

140. In case the contractor is asked to do any work in addition to, or in modification of, that specified in the estimate, the conditions under which he is to carry it out shall be embodied in a statement and his signature shall be obtained thereon in token of acceptance.

Measurement of Works.

141. All works done or materials supplied whether departmentally or by contract shall be measured by the Overseer or other officer in charge of the work. The measurements shall be recorded in the measurement book in the form used in the Government Public Works Department. The printed instructions in the measurement book shall, as far as practicable, be strictly followed.

142. The measurement book shall be the most important record since it forms the basis for all payments. Full particulars and the name of the work measured shall be given in the measurement book to admit of the work being readily identified and the measurements being checked.

143. A register of measurement books shall be maintained in the Engineer's Office showing the printed number on each book, the name of the person to whom issued, the date of issue and the date of return.

144. The measurements of every work of original construction, special repairs to roads costing above Rs. 50 per mile or repairs costing over Rs. 500 in the case of other works shall be check-measured either by the Engineer himself or by

a Sub-Divisional Officer. The check-measuring officer shall note in the measurement book the date on which the check-measurement was actually performed and the differences, if any, noticed by him.

145. If for any reason it is not possible in any case to check-measure any work, payment may as an exceptional case be made on the certificate of the Sub-Divisional Officer or the Engineer that, to the best of his knowledge, the work billed for appears to have been done.

146. No final payment shall be made for an original work costing more than Rs. 2,500 until at least 20 per cent of the measurements recorded are check-measured by the Engineer.

147. Payment for unmeasured works shall not be made. In the case, however, of petty miscellaneous works with regard to which measurements are not feasible the Sub-Divisional Officer shall certify on the bill that the work done is worth the amount claimed for it.

148. Bazar materials may not be shown in the measurement book. Requisition form (No. 40) may be used for the purchase of such materials. Except in case of urgency, no purchases shall be made unless requisitions are duly sanctioned by the Engineer or the Sub-Divisional Officer.

Note.—In the case of Taluka Local Boards the duties of the Sub-Divisional Officer by the members of the Standing Committee to whom the duties shall have been specifically assigned by a resolution of the Committee.

Bills.

149. Bills shall be prepared in the prescribed forms (Nos. 33 to 37). When work is done by daily labour, muster roll accompanied by an abstract of work done shall be the basis of account. Every bill or muster roll shall bear a reference to the number and page of the measurement book in which the measurements of the work are recorded. Charges for miscellaneous petty payments and for petty works not susceptible of measurement may be drawn on hand receipts in the hand receipt form (Form No. 39).

150. Bills shall be checked in the Sub-Divisional Office and if there is no Sub-Divisional Office, checking shall be done in the Engineer's Office.

151. Labour employed on muster rolls shall be paid by the Overseer or the Sub-Divisional Officer from the permanent advance given to him. No payment shall be made unless the work turned out is check-measured and approved for payment by the Sub-Divisional Officer. Payment to every cooly shall be acknowledged by the payee under his signature or thumb impression and the endorsement of the total payment made shall be recorded on the muster and signed and dated by the paying officer.

152. Wages remaining unpaid from an approved muster may be paid subsequently when claimed, in which case the procedure given below shall be observed :—

(*a*) Full amount of the muster shall be debited to the permanent advance at the time of payment and any undisbursed amount shall at the same time be credited to the petty cash book with full details, a note to that effect being made in the muster against each labourer who is not paid.

(*b*) Subsequent payments shall be made on hand receipts (Form No. 39), and reference to the muster in which the charge was originally included and the serial number of the particular person therein shall be quoted in each case. Such hand receipts shall be submitted for record with the original muster roll.

(*c*) Such unpaid amounts shall be kept by the Overseer till the completion of the work concerned and if it is not claimed before that date it shall be credited to the Treasury and the chalan submitted for record with the original muster.

153. Every bill received for payment or recoupment of permanent advance shall be audited in the accounts branch. The Accountant shall maintain an objection book in which every bill shall be entered. The irregularities, if any, noticed shall be entered therein in the proper column. The orders of the Engineer and the Chief Officer shall also be noted in the objection book.

154. No bill pertaining to Public Works expenditure shall be paid unless it is countersigned by the Engineer and passed for payment by the Chief Officer. Should the Chief Officer find any bill defective, he shall refuse to pass it for payment, and shall forthwith communicate his objections to the Engineer for remarks or explanation. If the Chief Officer is not satisfied with the explanations or remarks of the Chief Engineer, he shall submit them to the President for orders. Where there is no Engineer, every such bill shall be countersigned by the Chief Officer and passed for payment by the President, where the officers of Engineer and Chief Officer are held by the same Officer, every such bill shall be passed for payment by the President. After a bill is so passed, it shall be posted in the Register of Works in the account of the work concerned.

155. Payment to a contractor or supplier shall be made by means of a cheque drawn in his favour. Such cheque shall be delivered to the contractor or supplier concerned direct, and intimation shall be given to the Engineer about the payment.

156. On completion of every work, other than a current repair work, a completion certificate signed in the case of an original work by the Engineer costing more than Rs. 2,500 and in any other case by such officer as the Board may direct shall be recorded in the work file concerned.

157. At the end of every year, all documents connected with each work shall be filed in the following chronological order, namely:—

(1) Original estimate, and revised estimate, if any.

(2) Deviation statement, if any.

(3) Rate list or sanctioned piece work tender.

(4) Contract bond, if any.

(5) Vouchers (work bills or musters or hand receipts).

(6) Inspecting Officers' remarks, if any.

(7) Completion certificates.

The files shall be continued from year to year until a work is completed.

158. Accounts for tools and plant, road-side materials, materials charged to works, surplus materials and stock materials shall be maintained in the prescribed forms (Nos. 47 and 48) and the Engineer shall arrange for their periodical verification and shall record the necessary certificates.

159. (1) When any Local Board work is entrusted for execution to the Government Public Works Department, the President of the Board shall send to the Executive Engineer the sanctioned plans and estimates and communicate to him the budget allotment.

(2) Every such work shall be entered in the register of works and the Government Public Works Department shall be shown as the agency executing the work.

(3) At the end of every month or whenever necessary the Executive Engineer shall send a requisition to the President, District Local Board, showing the cost incurred on each such work. In the District Local Board accounts the requisition shall be treated as a voucher and payment shall be made to the Executive Engineer by cheque on the strength of the requisition. The expenditure incurred in connection with each work shall be shown against the respective work in the register of works.

160. (1) If any non-Local Board work is entrusted to the Local Board for execution, the President shall obtain from the authority entrusting the work for execution the necessary sanctioned plans and estimates and an amount equal to the estimated cost of the work.

(2) The estimates for such work shall include the establishment and tools and plant charges payable to the Board.

(3) Such work shall be treated as a Local Board work so far as execution is concerned. It shall be entered in the Register of Works, a separate set of pages being allotted for such works.

(4) The amount received under sub-rule (1) shall be taken as a deposit and the expenditure incurred shall be debited as an advance in the suspense account. At the end of every month or on the completion of the work necessary adjustment shall be made. The establishment and tools and plant charges shall be calculated and added to the amount of advance. An amount equal to the total advance thus arrived at shall be debited against the deposit amount as repayment. If the deposit amount falls short of the advance, the deficit shall be shown as outstanding advance and arrangements shall be made to recover it from the authority concerned. If the deposit is in excess of the advance the surplus shall be repaid to the authority concerned. The suspense account in respect of such items shall be closed at the end of the year or on completion of the work, whichever is earlier.

160-A. (1) Notwithstanding anything contained in sub-rules (1) and (4) of rule 160, when a village water supply (non-Local Board) work is entrusted by Government to a Local Board for execution,—

(*a*) the estimated amount of the cost of any desilting work shall be placed at the disposal of the local board in full not later than the end of February in each year and the local board shall carry out the work and surrender to Government any balance remaining with it on the 10th day of July in the same year ;

(*b*) as regards any other work, half of the estimated amount of the cost of such work shall be placed at the disposal of the local board not later than the 15th day of April in each year and after this amount is spent on the work the remaining cost shall be paid to the local board according to the procedure laid down in sub-rule (2).

(2) For recovering the remaining cost, the President of the local board may prefer bills on the Treasury in respect of such portion of the sanctioned work as may have been actually completed and in respect of materials actually received for the work, from time to time, and draw payments therefor:

Provided that the bills shall be duly certified by the Accountant of the local board and the President and countersigned by the Collector or his Personal Assistant:

Provided further that the President shall furnish such statements containing such particulars and in such forms in respect of the works as may be required by the Treasury Officer, from time to time.

160-B. Notwithstanding anything contained in this Chapter, all the powers vested in the Board shall be exercised by the President in consultation with the Engineer of the Board in respect of village water supply works entrusted by Government to a local board for execution:

Provided that tenders and contracts for works estimated to cost more than Rs. 5,000 but less than Rs. 10,000 each shall be sanctioned by the Standing Committee of the Board:

Provided further that all tenders and contracts for works estimated to cost more than Rs. 10,000 each shall be sanctioned by the Government Executive Engineer:

Provided further that tenders involving an increase over the estimated cost of any work may be sanctioned as aforesaid by the President of the Standing Committee only when the increase is within 5 per cent. of the estimated cost. If the increase exceeds this limit, the tenders shall be forwarded to the Superintending Engineer of the Government P. W. D. Circle concerned.

CHAPTER V.

MISCELLANEOUS.

161. The common seal of the Local Board shall remain in the custody of the President or of any other Officer authorised in this behalf by the Board. It shall be affixed to instruments by which transfers of property, including Government securities, are effected by the Board, to contracts and to other documents which have to be executed on behalf of the Local Board.

162. All orders regarding appointments, promotions, suspensions, fines, leave, securities to be furnished by the employees and any other orders affecting the service of Local Board employees shall be filed in serial order in a separate file.

163. An account of all forms shall be kept in every office which indents for forms In the case of forms on which receipts for money received are granted the number of each book with the number of pages in each shall be entered in the account. The books shall be issued in serial order and a new book shall not be issued until all forms in the book previously issued have been used and the book with the counterfoils is returned.

164. The balance of forms shall be verified by the head of each office at least once a year and a certificate of such verification shall be recorded in the register.

165. Vouchers, registers and other forms shall not be eliminated or destroyed otherwise than in accordance with the rules in Appendix A.

CHAPTER VI.

ANNUAL BUDGET ESTIMATE.

166. The return of actual and estimated income of local funds described in clauses (*b*) and (*c*) of section 75 to be rendered by the Collector under section 85 shall be furnished in Form No. 1 every year on or before the 1st November.

167. Form No. 1 shall be prepared for the entire district but the return for a taluka shall include only so much portion of the form as relates to that taluka.

168. On the reverse of the return the Collector shall certify in Form No. 2 for the purposes of section 79 the amount of cess levied in each municipal district or cantonment.

169. Below the certificate in Form No. 2 under section 79 the Collector shall also certify for the purpose of section 93 of the Bombay Village Panchayats Act, 1933, the amount of the cess levied within the limits of each panchayat.

170. The Collector shall send a copy of the return and of the certificate to the School Board of the District ; he shall also at the same time send a copy of an extract relating to the income from each taluka, municipality, Cantonment and village panchayat to the taluka local board, municipality, Cantonment authority and village panchayat concerned.

171. The District Local Board shall, every year on or before the 15th December communicate to each Taluka Local Board in Form No. 3 the probable amount of the cess levied under section 93 which will be at the disposal of the latter in the next official year.

172. The budget estimate of a Local Board shall be prepared in Form No. 4 and passed by the Board before the 16th February every year. The said form shall consist of five parts, namely :—

Part I.—The general budget estimate.

Part II.—The abstract of estimated expenditure on Public Works.

Part III.—The detailed estimate of works of first construction.

Part IV.—The detailed estimate of repairs.

Part V.—The detailed estimate of tools and plant, establishment and contingencies.

173. The basis for every item of receipts and expenditure entered in the budget estimate shall be filed for reference in the records of the Board. In preparing the budget estimate, the Board shall freely consult the Government officers in connection with the affairs of the State in the Revenue, Education and other Departments with a view to obtaining the fullest possible information on all points connected therewith.

174. The details of the School Board budget, submitted to the District Local Board under the law for the time being in force, shall not be incorporated in the general budget of the District Local Board.

175. For the purpose of Part III of the budget estimate (Form No. 4) the following shall be classed as works of first construction, namely :—

(*a*) Entire new constructions.

(*b*) Additions to existing works.

(*c*) Repairs to buildings or works newly purchased.

(*d*) Repairs to buildings or works which are brought into use after being abandoned.

176. All repairs whether ordinary or special, which do not fall under rule 175, shall be classed as "repairs" for the purpose of Part IV of the Budget (Form No. 4).

177. An extract of so much of each Local Board Budget estimate as finally approved and sanctioned as relates to the works to be executed by the Government Public Works Department, shall be forwarded to the Accountant General through the Executive Engineer concerned not later than the 15th March. Similar extracts relating to works to be executed by the Government Public Works Department and provided in the revised or supplementary budgets shall as soon as practicable be sent to the Accountant General through the Executive Engineer concerned.

178. Reappropriation of funds from one head to another shall be noted in the Form No. 5 of reappropriation statement and a copy of the reappropriation statement involving a change in the allotment of works to be executed by the Government Public Works Department shall be sent to the Accountant General through the Executive Engineer concerned.

179. All budget estimates and all reappropriation statement shall be filed together in a separate file.

180. If a lump sum is provided in the budget under a minor head or for unforeseen charges, allotment sanctioned by the Board from time to time for each work from each such sum shall be shown in the reappropriation statement and filed in the budget file.

CHAPTER VII.

Forms of Accounts and how to be Maintained.

181. The accounts of the District Local Board shall be maintained in the following forms :—

(1) Collector's Return under section 85.

(2) Collector's Certificate under section 79.

(3) District Local Board Return under section 85.

(4) Budget Estimate.

(5) Statement of Reappropriations.

(6) General Receipt Form.

(7) General Cash Book.

(8) Classified Register of Receipts and Payments.

(9) Register of Cheques.

(10) Cheque Form.
(11) Treasury Pass Book.
(12) Transfer Sheet.
(13) Demand and Collection Register of Toll and Ferry Receipts.
(14) Demand and Collection Register of other Taxes and dues.
(15) Petty Cash Book.
(16) Register of Undisbursed amounts.
(17) Register of Deposits and Advances.
(18) Register of Private Contributions.
(19) Monthly Cash Account.
(20) Annual Account.
(21) Audit Register of Establishment and Fixed recurring charges.
(22) Travelling allowance Register.
(23) Pay Bill and Acquittance Roll of Establishment other than Work-charged Establishment.
(24) Provident Fund Ledger.
(25) Provident Fund Broad Sheet.
(26) Register of Pension Payment Orders.
(27) Travelling Allowance Bill.
(28) Contingent Bill.
(29) Register of Contingent Charges.
(30) Register of Investments.
(31) Register of Dead Stock.
(32) Register of Works.
(33) Muster Roll.
(34) First and Final Bill.
(35) Running Account Bill.
(36) Pay Bill and Acquittance Roll of Mile Coolies.
(37) Pay Bill and Acquittance Roll of Work-charged Establishment.
(38) Acquittance Roll.
(39) Hand Receipt.
(40) Requisition for local purchase of articles.
(41) Rate List.
(42) Estimate.
(43) Estimate for Roads.
(44) Deviation Statement.
(45) Piece Work Tender Form.
(46) Daily Report.
(47) Register of Road Materials or other materials charged to works.
(48) Register of Tools and Plant and Surplus or Stock materials.
(49) Register of Roads.

(50) Register of Immovable Property other than Roads.

(51) Register of Securities furnished by Officers and servants.

(52) Cattle Pound Register (to be maintained in the Office).

GENERAL CASH BOOK.

182. In the General Cash Book (Form No. 7) shall be recorded on the left side the receipts to be credited to the Board and on the right side the amounts of all cheques drawn with their numbers and the names of the persons in whose favour the cheques are drawn.

183. The receipts of assigned revenues specified in section 75 will be communicated monthly to the District Local Board by the Treasury. All amounts so advised shall be entered in the General Cash Book as if they were cash transactions. After retaining the portion due to itself under clause (*b*) of sub-section (*1*) of section 76 the District Local Board shall, on the 5th of every month, pay by cheque to each Taluka Local Board and the School Board the share due to them. The amount of the share due to each village panchayat under section 93 of the Bombay Village Panchayats Act, 1933, shall be paid similarly by cheque to the Panchayat. The amounts of all such cheques shall be debited by minus entries on the receipt side of the cash book and under the corresponding heads in the classified registers of receipts.

184. The amounts due to the District Local Board realised by a Taluka Local Board shall be remitted by it to the Treasury for credit to the District Local Board. At the close of each day on which any such amount is received, the Taluka Board shall send to the District Local Board a daily sheet, each item therein being supported by a chalan in original. All such daily sheets with the chalans shall be filed in one file in serial order.

185. Every member, officer or servant of a Board shall similarly credit to the Treasury all money received by him ; and he shall immediately send a report with the chalan in original to the District Local Board Office. Such reports with the chalans shall be filed in the daily sheet file.

186. The daily total of each detailed head from the classified register of receipts (Form No. 8) shall be carried to the General Cash Book.

187. The General Cash Book shall be balanced at the end of each day on which there is a transaction. At the end of each month the entries of receipts and expenditure in the Cash Book shall be compared, item by item, with Treasury Pass Book and the balances agreed ; the difference, if any, being explained in a foot-note in the Cash Book thus :—

Cash Book closing balance.

Deduct receipts not yet credited in the Pass Book (*a*).

Add amount of uncashed cheques drawn on Treasury (*b*).

Balance as per Treasury Pass Book.

Balance in Bank.

Details of

(*a*)

(*b*)

CLASSIFIED REGISTERS OF RECEIPTS AND PAYMENTS.

188. A Classified Register of Receipts and a Classified Register of Payments (Form No. 8) shall be maintained for receipts and expenditure, respectively. The budget heads with the estimated receipts and estimated allotments shall be entered at the top. A page or set of pages shall be assigned for each major head and the detailed heads shall be shown horizontally in the cases provided. In the case of expenditure on account of public works, an account shall be opened in the classified registers only for the main heads prescribed in the annual accounts. The expenditure under each detailed head subordinate to the main heads shall be watched through the register of works.

189. All additions to, or alterations in, the budget grants which may be sanctioned by the Board during the course of the financial year shall be noted against the detailed heads concerned in red ink with a plus or minus entry, and the authority for each such addition or alteration shall be quoted.

190. Every item of receipt shall, immediately without reservation, be brought to account in the classified register of receipts and the daily total of each head shall be taken to the general cash book at the end of the day.

191. The net proceeds of the assigned revenues shall be entered in the classified register of receipts monthly, as soon as the figures are communicated by the Treasury. As cheques are issued for the payment of the portion of the share of such revenue to Taluka Local Boards, School Board or Panchayats, the amounts of the cheques shall be shown in the receipt register by minus entries under the appropriate heads.

192. Every item of expenditure shall be brought to account in the classified register of expenditure from bills under the appropriate head and the daily totals of all the heads shall be tallied with the expenditure shown in the general cash book.

193. At the end of each month, the figures in both the classified registers shall be added up and a progressive total of all the columns shall be worked out below the monthly total for the purpose of compiling the monthly cash account and annual accounts. Where the grand total under any head in the register of payments shows that the budget grant is likely to be exceeded, steps shall be forthwith taken to meet the excess either by reappropriation or by a supplementary allotment.

194. If for any reason any amount is required to be transferred from one head of account to another, the transfers shall be effected through the transfer sheet by plus or minus entries under the appropriate heads in the place provided as soon as the necessity for such transfer is discovered.

195. Government grants given for specified objects and popular contributions received for specified purposes shall in the first instance be credited under the suspense head. A separate page shall be set apart for each kind of grant and in the case of a popular contribution for each work. Expenditure incurred on the works for which grants are given or contributions are received shall be debited to the appropriate service head of expenditure and as soon as the work is complete or at the end of each month the expenditure incurred from the Government grant or popular contribution shall be shown as expenditure under the suspense head and the unspent amount shall be shown as balance in the suspense account.

REGISTER OF CHEQUES.

196. The object of the register of cheques (Form No. 9) is to note the purpose and the amount for which and the person in whose favour each cheque is drawn. The date and the manner in which each cheque is sent to the payee shall be noted in the column provided for the purpose. When a cheque is drawn for items which have to be paid by the office, the disbursement shall be noted in the proper column and the undisbursed amount shall be taken at once to the petty cash book and reference shall be given in the register against such entries. No amount for which a cheque is drawn and cashed shall remain in the office without being brought to the petty cash book.

TREASURY PASS BOOK.

197. All sums paid into the Treasury on account of the Board and all payments made by the Treasury on cheques shall be entered in the Treasury Pass Book (Form No. 11) which shall be sent with each remittance and on the last working day of each month to the Treasury to be written up. At the close of each month the entries on each side of the Pass Book shall be totalled and the balance struck by the Treasury. The balance in the Treasury Pass Book shall be agreed with that shown in the general cash book.

TRANSFER SHEETS.

198. Transfer sheets (Form No. 12) shall be maintained in order to correct errors of classification and to bring to account recoveries of over-payments. Transfer entries shall be made in as concise a manner as possible and all particulars sufficient to explain both the nature of the adjustment and the grounds for correction shall be clearly stated. Every such entry shall be initialled by the Chief Officer in token of correctness.

199. Recoveries of over-payments in cash or by short payment shall be adjusted as follows :—

(*i*) They will ordinarily be adjusted by deduction from the current year's charge under the detailed head previously overcharged.

(*ii*) If a recovery is made by a short payment of an item chargeable to a detailed head under which the previous over-payment occured, no further adjustment is necessary, as the short payment is a set off against the excess payment.

(*iii*) If a recovery is made in cash, the amount shall be taken to the head "Cash Recoveries" as a credit item.

(*iv*) If the recovery is effected by short payment of an item chargeable to a detailed head other than that under which the over-payment was previously made—

(*a*) the total payment (i.e., the amount actually paid plus the amount short paid) shall be entered under the detailed head to which the item short paid pertains.

(*b*) the amount short paid shall be entered as a credit item under "Cash Recoveries".

The various credit items pertaining to over-payments during the year shall be entered as deductions in the classified register of payments under the detailed heads

to which they pertain. Before the accounts of each month are closed, the total cash recoveries effected in the month shall be debited to the head "Cash Recoveries" in order to clear the corresponding credit head in the classified register of receipts.

(*v*) Recoveries of over-payments relating to previous years shall be taken to the head "Miscellaneous".

DEMAND AND COLLECTION REGISTER OF TOLL AND FERRY RECEIPTS.

200. When the right to collect ferry tolls or road tolls is farmed out, a register (Form No. 13) shall be maintained in the District Local Board Office to watch the demand and collection.

201. The arrears of past years with the names of persons from whom the arrears are due shall be carried forward to the new register every year.

202. As soon as the leases for the year are sanctioned, the amount of each lease, the name of the lessee, the amount and the date of each instalment shall be entered in the register and every recovery made shall be noted against the demand.

203. When a Board collects tolls or other dues by direct management, the demand register shall only show the name of the toll bar or ferry and the collections as they are received. The collections shall be effected by means of tickets.

204. The person who pays the tolls or other dues shall receive a ticket or receipt respectively. The progressive totals of the sums received shall be worked out on each page of the book of tickets or the book of receipts, as the case may be, in the place provided at the foot, as each page is completed.

205. When remittance is made to the treasury, the progressive total of the money received shall be taken to the last counterfoil used and a note of remittance shall be made thereon. An inspecting officer shall see that these totals are taken regularly and correctly as directed in this rule and shall initial the pages which he checks.

206. At such intervals as may be fixed by the Board, but in no case later than a fortnight, the collecting karkun shall remit his collections to the Treasury or with the Board's approval by money order to the Board's Office.

207. The demand register shall be totalled at the end of the year and the total recoveries shall be agreed with the classified register and a certificate to that effect shall be recorded by the Accountant.

DEMAND AND COLLECTION REGISTER FOR OTHER TAXES, ETC.

208. The Demand and Collection Register of other taxes and dues (Form No. 14) shall be maintained in two parts. All taxes and fixed demands shall be noted in one part. The other part shall include all items of revenue other than taxes and fixed demands. Separate pages shall be set apart in the first part for each kind of tax. If the tax is to be collected in different villages a number of pages shall be set apart for each village. A separate page or set of pages shall be assigned in the second part for each class of revenue and each item of demand shall be separately shown. At the beginning of the year, the outstanding arrears as well as the demand for the year shall be noted and initialled by the Chief Officer. As collections are made, they shall be noted against the corresponding demand.

209. The entries of demand in the case of sale proceeds of moveable or immovable properties shall be made as soon as the sales are sanctioned.

210. Contributions due from Municipalities or other local bodies or the State Government shall be noted in the register as soon as the demand is known and the recovery watched through this register.

PETTY CASH BOOK.

211. (*i*) The Petty Cash Book (Form No. 15) shall mainly contain an account of the permanent advance. It shall be confined to the disbursements made from the advance and recoupments thereof. Disbursements made shall be shown on the right side and the recoupments on the left. The balance shall be verified at the end of every month and a note of verification shall be made in the register. When the balance of the advance in hand is running low and in any case at the end of the financial year, the items of expenditure shall be billed for in the proper form and the advance shall be recouped.

(*ii*) At the end of every month, an abstract shall be worked out showing the details of the amount to be recouped.

212. (*i*) A separate register (Form No. 16) shall be maintained for undisbursed moneys. All moneys drawn in cash from the Local Fund for a purpose other than the recoupment of permanent advance and remaining undisbursed shall be forthwith credited to this register. Subsequent disbursements shall be noted from day to day on the right side. All moneys received on behalf of the Board shall also be accounted for in this register, until actually remitted to the Treasury. The balance shall be worked out at the end of the day on which there are transactions and attested by the head of office. At the end of every month, the balance in hand shall be verified by the head of office and a certificate of verification shall be recorded in the register.

(*ii*) A receipt shall be obtained for every payment in the receipt register and shall be attested by the disbursing officer.

(*iii*) At the end of every month an abstract shall be made out showing the details of undisbursed amount. Such undisbursed amount shall be credited to the Local Fund at the end of the month, unless it can be disbursed during the succeeding month.

(*iv*) When an item is paid, the serial number of receipt of that item shall be noted against the item of disbursement and the serial number of disbursement shall be noted against the item of the receipt side.

REGISTER OF DEPOSITS.

213. Each item of deposit received shall be at once entered in the Register of Deposits (Form No. 17) with the name of the person from whom it is received, and its final disposal shall be watched. Repayments shall be shown in the columns provided for the purpose. When a deposit is adjusted by transfer to some head of account, it shall be shown as repaid and the fact of adjustment shall be noted in the remarks column, quoting the major head of account, and the date of adjustment. Deposits shall on no account be kept out of account but shall be at once shown in the general cash book.

214. At the close of each year, the total repayments from and balance of each item of deposit shall be worked out in the register and the latter shall be carried over to the register for the following year. The deposit register shall be examined at frequent intervals by the Chief Officer.

215. Deposits not exceeding one rupee unclaimed for one whole year, balances not exceeding one rupee of deposits partly repaid during the previous year and all balances unclaimed for more than three complete years, shall, at the close of March, in each year, be credited to the Local Board by means of transfer entries. A note of such credit as lapsed deposits shall be made against the respective items, quoting the date of credit. Depoits thus credited shall not be repaid without the sanction of the Board, but this sanction shall be given as a matter of course on ascertaining that the item was really received, was credited as lapsed deposit and is claimed by the person who might have drawn it at any time before the lapse. The amount of a lapsed deposit refunded shall be charged in the accounts of the Board as a refund and not debited to deposits.

216. The monthly columns of repayment of deposits shall be totalled and the total shall be agreed with that in the classified register and attested by the Chief Officer.

REGISTER OF ADVANCES.

217. Each item of advance paid shall be at once entered in the Register of Advances (Form No. 17) with the name of the person to whom it is paid and its recovery shall be watched until the whole advance is repaid. Recoveries shall be shown in the columns provided for the purpose against the original entry of advance and the balance worked out at the end of the year.

218. At the beginning of each year all the outstanding advances shall be brought forward in the register and initialled by the Chief Officer. When an advance is recovered by deduction from a bill or by transfer entry, the amount shall be noted against the original advance in the column for the month in which the adjustment is made. No adjustment shall be made unless such bill has been accepted and passed. The monthly column of recoveries shall be totalled at the end of the month and the total shall be agreed with the corresponding credit under advances in the classified register and shall be initialled by the Chief Officer.

REGISTER OF PRIVATE CONTRIBUTIONS.

219. (*i*) Contributions received from private individuals or other Local Bodies for specified objects shall be shown in the Register of Private Contributions (Form No. 18). A separate account shall be opened for each work, and the amount of contributions received on account of that work, the expenditure incurred thereon and the refund of unspent balances, if any, shall be watched.

(*ii*) Expenditure incurred on such works shall, in the first instance, be debited in the classified abstract under the appropriate head and on completion of the work or if the work is not completed before the end of the year, at the end of the year, the total expenditure against the contribution shall be shown in this register, the balance worked out and carried over to the register for the succeeding year.

MONTHLY CASH ACCOUNT.

220. (*i*) At the end of every month a monthly cash account (Form No. 19) shall be prepared from the classified register of receipts and payments.

(*ii*) In order to show the correct financial position of the Board, debt account and investment account shall be separately shown in the cash account.

(*iii*) The debt account shall be prepared from the suspense account showing the loans, deposits, advances, contributions for specified objects, such other items, and the net balance due to the Board. The School Board or Taluka Local Board revenue not transferred shall be shown in the debt account as deposits.

(*iv*) In the investment accounts shall be shown the balance of investments at the beginning of the month, the amounts invested during the month, the amounts withdrawn or securities or cash certificates encashed and the balance at the end of the month.

(*v*) The details of balances shall be shown as under :—

(*a*) Balance in the Treasury.

(*b*) Balance in the Bank as current deposit.

(*c*) Balance of investment.

ANNUAL ACCOUNT.

221. (*i*) Every District and Taluka Local Board shall at the end of each financial year prepare an account in Annual Account Form (Form No. 20) showing the receipts and payments classified under the several heads of account contained in the budget estimate. Annas and pies shall be eliminated.

(*ii*) The totals of the details under each head of receipts and payments as given in the annual account shall agree as to rupees exactly with the figures under the same heads in the classified register.

(*iii*) The details of the balance in the Treasury and in the bank or banks shall be separately shown in the annual account and a certificate that the closing balance as shown in the account has been compared with that shown in the Treasury pass book or the bank pass book, as the case may be, and found to be correct as to rupees, shall be appended to the account. A memo. explaining the difference, if any, shall also be attached to the certificate.

(*iv*) The accounts shall be checked by the Auditors at the annual audit with reference to the account books.

222. (*i*) In addition to the annual account of the District Local Board referred to in rule 221 a consolidated account comprising the accounts of the District and Taluka Local Boards and the School Board shall be prepared in the District Local Board Office and sent with the administration report. For this purpose, the District Local Board shall call for a copy of the annual account from each Taluka Local Board together with the certificate of balances referred to in clause (*iii*) of rule 221. A statement of receipts and expenditure shall also be obtained from the School Board. Only the total receipts and expenditure under Primary Education shall be exhibited in the Consolidated Annual Account.

223. The President of every District Local Board shall, as soon as possible after the close of the year, furnish to the Accountant General, through the Treasury Officer, a certificate of agreement of the balance of the Local Fund of the District

(as a whole) with that in the Treasury as agreed with the books of the Accountant General as required by Article 222, Civil Account Code, Volume I.

Note.—The balance of the Education Fund is not to be included in that of the Local Fund referred to in this rule.

AUDIT REGISTER OF ESTABLISHMENT AND FIXED RECURRING CHARGES.

224. The following points shall be observed in opening the Audit Register of Establishment and Fixed Receiving Charges (Form No. 21), namely :—

(*a*) The establishment shall be arranged in the order of budget heads and entered in this register ,a few blank pages being left after each major head for the entry of any permanent establishment subsequently sanctioned.

(*b*) A page shall be set apart for each section and one (or more, if necessary,) for the total charge of establishment, when the number of sections exceeds one. The sections shall be arranged alphabetically.

(*c*) Periodical charges shall be shown in the pages for periodical charges at the end. The term " periodical charges " includes—

(*i*) Rents, rates and taxes.

(*ii*) Grants-in-aid, contributions, or other payments to other Local Bodies such as Municipalities, Sanitary Committees, Village Panchayats.

(*iii*) Contributions or grants to public institutions.

(*iv*) Contributions to the State Government.

(*v*) Other fixed amounts paid at regular intervals.

(*d*) When periodical charges are paid quarterly, half-yearly or yearly, the headings of the money columns shall be altered to correspond with the number of payments.

(*e*) An index shall be prepared and kept at the beginning of the register.

225. A register shall ordinarily last for four years. No new register need be opened every year. The orders sanctioning the charges shall be quoted in the first column and initialled by the Chief Officer. In the case of establishment, the sanctioned scale of each post according to the schedule of establishment sanctioned under section 119 and changes sanctioned from time to time shall be noted in the register.

226. The minimum and maximum columns shall be used when the pay is progressive and as soon as an increment is sanctioned, the actual pay shall be noted in the " actual " column, against the section in which the increment is granted. Each grade in the schedule shall be treated as a separate section. Sufficient space shall be left between two sections.

227. In posting the audit register, the amount shown in the column of pay bill headed " net charge " for each section shall be entered against each section and below that shall be written in red ink the withheld pay and fines as shown in the bill to check arrear bills preferred and fines subsequently remitted. The amount of undisbursed pay subsequently refunded shall be noted in the column of the month to which it pertains. No subsequent claim not covered by the last three entries or by special authority to utilise savings shall be admitted without full explanation of the circumstances under which it was omitted from the monthly bills which are expected to exhibit the full claim for the month.

228. Payment on account of pay is to be recorded in the column for the month for which the pay is due and not for that in which it is disbursed, the number and month of the voucher being quoted in the entry as briefly as possible ; for example, "23/6" would indicate voucher 23 of the month of June.

229. The source from which a supplementary bill is to be met shall invariably be noted against it in the register by the use of the following letters :—

W.=If met from amounts held over for future payments.

S.=Savings.

F.=Fines.

U. P.=Undisbursed pay refunded.

When excesses over the sanctioned scale are passed consequent on arrangements made in leave vacancies, a note to that effect specifying the perod of leave shall be made in the remarks column.

230. Temporary establishment shall be similarly dealt with, but shall be shown in a separate page or pages of the register, the period for which the sanction holds good being distinctly specified in the second column below the details of the appointments sanctioned and lines drawn across the cages for the month previous and subsequent to that period so as to prevent admission, by oversight, of pay for a period in excess of sanction.

231. Before the pay-bill of each section is passed for payment, the Accountant shall verify the claim with the entries in the register, and a memo. showing the changes shall be kept with every pay-bill.

232. The other recurring charges such as grants-in-aid, contributions, rents, shall be noted on a separate page and payments shall be noted in the months in which the expenditure is incurred.

233. No claim shall be admitted for payment unless it is entered in the audit register and is supported by competent sanction.

TRAVELLING ALLOWANCE REGISTER.

234. Travelling allowance drawn by members of the Local Board and the stipendiary officers or servants shall be recorded in the Travelling Allowance Register (Form No. 22). One page shall be set apart for each member and the amount paid to each shall be noted on that page.

235. In the case of members, the money limit fixed by the State Government for each member shall be noted at the top and before any claim is admitted, the Accountant shall see that the money limit is not exceeded.

236. The place of residence of every member shall be ascertained by calling for a declaration from each member and noted in the register on the page allotted to him and any further change in the place of residence notified by the member shall be similarly noted.

PAY BILL OF PERMANENT AND TEMPORARY ESTABLISHMENT.

237. Pay and allowances is other than travelling allowance of the members of the Local Board establishment shall be drawn in Form No. 23.

238. Permanent travelling allowance, conveyance allowance or any compensatory allowance and house rent shall be drawn along with pay in the same form.

239. When the pay-bill has been cashed, the money shall be promptly disbursed to the payees concerned and their signatures, stamped where necessary, shall be taken in the column provided for the purpose. If the payee does not present himself before the end of the month, the amount drawn for him shall be refunded by short drawal on the next bill and shall be redrawn when required. In the meanwhile the undisbursed amounts shall be credited to the Petty Cash Book.

PROVIDENT FUND LEDGER.

240. (*i*) Where a Provident Fund is established by a Board the following books shall be maintained :—

(*a*) A Day Book in Form No. 24.

(*b*) A Ledger in Form No. 24A.

and

(*c*) A Broad Sheet in Form No. 25.

(*ii*) The total subscriptions for a month, refunds of withdrawals from the fund, Board's contributions and interest received shall be posted on the receipt side of the Day Book. Advances from the fund, final payments to subscribers and investments, if any, shall be shown on the expenditure side of the Day Book. The Book shall be balanced on every day on which there is a transaction.

(*iii*) Subscriptions of individual subscribers, the Board's contribution, withdrawals and refunds of withdrawals shall be posted into the ledger (Form No. 24A) from monthly pay bills and the balance in column 7 shall be worked out. A page or set of pages shall be assigned to each subscriber. The ledger shall be indexed.

(*iv*) Before the close of each month the figures of subscriptions, refunds and other items shall be posted from the ledger to the Broad Sheet (Form No. 25) and the total receipts and withdrawals for the month shall be agreed with the Day Book.

(*v*) At the close of the year, the columns of the Broad Sheet shall be totalled and the interest earned shall be calculated and posted in the ledger in the space provided for the purpose.

(*vi*) A copy of his account shall be furnished to each subscriber by the end of June of the following year.

(*vii*) When an account is closed, the amount at credit shall be dealt with under the regulations framed by the Board.

(*viii*) A register shall be maintained in the form of Register of Advances for noting the advances made from the Provident Fund. As soon as an advance is sanctioned and paid, it shall be entered in this register and repayments noted as they are made.

(*ix*) When recoveries of advances are made from the pay, the amount of monthly subscription and the amount of advance recoveied shall be shown separately in the pay bill.

REGISTER OF PENSION PAYMENT ORDERS.

241. Where a Board has established a pension fund a register of Pension Payment Orders (Form No. 26) shall be maintained in the District Local Board Office. As soon as a pension is sanctioned by the Board and a pension payment order is

issued, it shall be entered in the register and the entry shall be initialled by the Chief Officer. The pension payment orders shall be filed in one series as they are issued and the register shall serve as an index to the file of the orders.

Travelling Allowance Bill.

242. Travelling allowances other than permanent or fixed allowances of Local Board members and stipendiary officers and servants, shall be drawn on a Travelling Allowance Bill (Form No. 27). For the purpose of drawing the allowance on account of family, a certificate must be furnished by the claimant, of the number and relationship of the members of his family for whom the allowance is claimed.

243. Every claim for the cost of carriage of personal effects shall be supported by a certificate that the actual expense incurred was not less than the sum claimed.

244. When a journey is performed by a hired conveyance, vouchers in support of charges incurred shall be attached to the bill presented for payment. If no voucher is available, the claim may be admitted on the authority of a certificate signed by the controlling officer.

245. No claim for travelling allowance shall be paid unless the bill is countersigned by the President of the District Local Board.

Contingent Bill.

246. All miscellaneous charges for which separate forms are not prescribed shall be drawn on a Contingent Bill (Form No. 28).

If any claimant presents his own bill or statement of account the payment may be made on such document.

247. Charges under two major heads shall not be included in one bill.

248. The certificates on the bill shall be signed by the preferring officer who shall be responsible to see that the charges made in the bill are of obvious necessity and are at fair and reasonable rates, that previous sanction for any item requiring it is attached and that the requisite sub-vouchers are all received and are in order.

Contingent Register.

249. The contingent register (Form No. 29) shall be maintained to enable the disbursing officer to watch the progress of the expenditure against the allotment. As soon as the budget is sanctioned, the allotments sanctioned for each sub-head under "contingencies" of each major head shall be noted in each column at the top and as each payment is made, the date of payment, the voucher number and the amount paid shall be posted in the register.

250. At the end of every month, the monthly and progressive totals of each column shall be noted in red ink in the register.

Register of Permanent Advances made to Officers.

251. To officers who are required to incur petty expenses which are to be paid before money can be drawn on cheques and to facilitate payments due to daily labourers or piece-workers or for the emergent purchase of stores, a permanent

advance may be allowed by the Board. The advance shall not exceed the requirements as determined by the average monthly expenditure and the opportunities for cashing bills. The permanent advances allowed to all the officers shall be recorded in the register of Permanent Advances made to officers.

252. Each officer who has obtained a permanent advance shall, on first receiving it and on the first working day each year send to the President of the Board concerned an acknowledgment in the following form :—

"I hereby acknowledge to have in my possession a permanent advance of Rs. which sum is due from and to be accounted for by me."

253. On the transfer of charge of an office a similar acknowledgment for the full amount of the permanent advance shall be submitted by the relieving officer.

REGISTER OF INVESTMENTS.

254. (*i*) A record of investments of the Local Fund either in Government securities or in the Postal Cash Certificates or in any approved Banks shall be maintained in the Register of Investments (Form No. 30).

(*ii*) Government Promissory Notes and similar valuables belonging to the Board shall be kept with the Reserve Bank of India or with the permission of the Collector, in the Treasury or in a Bank approved by the State Government, in a strong box the keys of which shall remain with the Chief Officer or other officer as the Board may direct.

(*iii*) Securities shall be examined and verified by the Chief Officer in the first week of April each year and a certificate of verification shall be recorded in the remarks column of the register against each class of securities.

(*iv*) If the Local Fund is kept in any approved Bank as current deposit, it need not be shown in the register, but amounts kept as fixed deposit for a specific period shall be shown in the register.

(*v*) An abstract of all the investments shall be prepared at the end of every month and shall be kept with the register and a certificate shall be recorded by the Chief Officer to the effect that the total amounts of investments tally with the amounts shown in the monthly cash account.

REGISTER OF DEAD STOCK.

255. The Register of Dead Stock (Form No. 31) shall be maintained in two parts, one for all articles of furniture and the other for other moveable property of a permanent and durable nature the value of which is more than Rs. 5. A separate page or pages shall be set apart for each kind of articles.

256. Every head of office shall maintain a separate register and all articles pertaining to his department shall be entered in that register as soon as they are purchased and a certificate shall be recorded on the bill pertaining to that article under the signature of the head of office that the article has been entered in the register quoting the page number.

257. When any article is disposed of finally by sale or otherwise, or is written off the register, the particulars of disposal shall be noted in the register under the initials of the Head of Office.

258. All the articles appearing in the register shall be verified at least once a year by the Head of Office and a certificate indicating the results of the verification shall be recorded in the register under his signature.

Note.—Rules 255 to 258 do not apply to the Engineering Branch where they are separately accounted for.

REGISTER OF WORKS.

259. A Register of Works (Form No. 32) shall be maintained in the Local Board Account Office to watch the progress of expenditure on each work undertaken by the Board in a year against the sanctioned estimate and the budget allotment.

260. A separate set of continuous pages shall be assigned for each of the detailed heads subordinate to the following main heads under "Civil Works" and the works shall be arranged in the same order as in Parts III and IV of the Budget :—

(1) Civil Buildings—(*a*) Original works.
(*b*) Repairs.
(2) Communications—(*a*) Original works.
(*b*) Repairs.
(3) Other public improvements—(*a*) Original works.
(*b*) Repairs.

261. The register shall be provided with an index which shall be sub-divided under the several heads and shall be neatly kept for ready reference. At the commencement of the year the incomplete works of the previous year shall first be entered with the amount of the estimate and the expenditure up to the end of the previous year. The works sanctioned for execution during the year shall then be entered and the amounts of the sanctioned estimates and the allotment for each work shall be noted and each entry shall be initialled by the Chief Officer in token of correctness.

Any changes in the allotments subsequently made and the amounts of revised or supplementary estimates shall be similarly noted.

262. As soon as work bills are passed for payment, the amount of each bill shall be posted in the register in the account of the work concerned and progressive totals shall be taken in the column provided for the same.

263. When a work is complete, the fact of the receipt of the completion certificate shall be noted in the remarks column together with the amount of the certificate. Incomplete works at the close of the year shall be carried forward to the register of the succeeding year with the total expenditure up to the end of the year.

264. All works of first construction as defined in rule 175 shall be called "Original Works". All original works estimated to cost Rs. 2,500 or more shall be termed major works and all other works shall be termed minor works.

265. In addition to the register of works a detailed works ledger shall be maintained in the District Local Board Office for all major works. The quantity and cost under each head or sub-head of work as shown in the estimate shall be entered in the top columns. As soon as bills are passed for payment, the items and amounts billed for shall be entered in the appropriate columns and the total expenditure shall be shown at the end.

266. The total allotment for the year for each work shall be noted at the top of the page and any additions or reductions made during the year shall be noted

with the authority therefor. If supplementary estimates are sanctioned, the items of sub-heads shall be entered below those of the original estimate and both shall be totalled.

267. When a revised estimate is found necessary, the record of the original estimate shall be closed and the revised estimate shall be entered on a fresh page, a cross reference being given to the pages on which the original and revised estimates are noted.

The ledger shall be provided with an index.

268. A similar ledger shall be maintained by Sub-Divisional Officers for all minor works. Where there are no Sub-Divisional Officers, the ledger for all minor works shall be maintained in the Engineer's. Office.

ACCOUNT OF " TOOLS AND PLANT ".

269. The Account of Tools and Plant (Form No. 48) shall consist of 4 sections:—

(*a*) Tools and Plant.

(*b*) Office Furniture.

(*c*) Surveying and Mathematical Instruments, and

(*d*) Books and Maps.

A consolidated ledger for the whole District shall also be maintained in the office of the Engineer in Form No. 48, a separate page or pages or part of a page being set apart for each article according to requirements. Receipts and issues for the district as a whole shall be entered therein as they occur. Transfers between subordinates or temporary transactions shall not find a place therein. In April every year, the Engineer shall issue a certificate under his signature as under and the certificate shall be made available for audit along with the ledger :—

" Certified that the stock of (*a*), (*b*), (*c*), (*d*) on 1st April with the several subordinates has been verified by me or my subordinates and the total stock in the District corresponds with the closing balance of last year as shown in the ledger in my office. "

The Engineer shall make his own arrangements for getting statements, returns and other documents, from his subordinates who are entrusted with the custody of these articles.

270. A manuscript register shall be maintained in the Engineer's Office to show the rent recovered from contractors and others for the loan of tools. This shall also be available for audit.

" Roadside materials (metal, sand, murum and ruble). "

271. A consolidated register " Register of Road Materials " (Form No. 47) shall be maintained in the Audit Branch. Two horizontal lines shall be left for each mile, the top line for entering the quantities and the second line for entering the bill number in support of the transaction. As bills are audited, notes of transactions appearing, in the bill shall be taken by the clerks in a manuscript book and at the end of the month, these notes shall be verified with returns (showing the receipts and issues with authority in upport thereof) received from the sub-ordinates. The correct entries for the month shall then be made in the consolidated

register. In April every year, a statement showing the roadside material in his charge on 1st April shall be obtained from each subordinate with the following endorsement :—

"Actually checked on roadside and found correct."

Such statements together with the consolidated register shall be made available for audit.

MATERIALS CHARGED TO WORKS.

272. A consolidated register "Register of Tools and Plant" (Form No. 48) shall be maintained in the Audit Branch, a separate page being set apart for each work in which there are transactions. Two horizontal lines shall be left for each material, the top line for entering the quantities and the second line for entering the bill number in support of the transactions. As bills are audited, notes of transactions appearing in the bill shall be taken by the clerks in a manuscript book and at the end of the month these notes shall be verified with returns (showing the receipts and issues with authority in support thereof) received from the subordinates. The correct entries for the month shall then be made in the consolidated register.

273. In April every year, a statement showing the materials in his charge on 1st April shall be obtained from each subordinate with the following endorsement:—

"Actually checked and found correct."

Such statements together with the consolidated register shall be made available for audit.

274. All materials, remaining over after completion of a work, shall be taken to, and shown as issues in, the surplus material register (Form No. 48) with the following note :—

"Transferred to the surplus materials register."

SURPLUS MATERIALS.

275. All materials remaining over after completion or abandonment of a work or which have come out of works under demolition shall be taken to the surplus materials register to be maintained in the Engineer's Office. It shall be in Form No. 48 prescribed for Tools and Plant, one page being set apart for each kind of material. Receipts and issues for the District as a whole shall be entered therein as they occur.

Note.—These materials can be used for works under the orders of the Engineer by debiting the cost thereof at current market rates (to be fixed by the Engineer in each case) to the work and giving credit to the District Local Board and whenever they are so used statements showing the adjustments to be made shall be sent by the Engineer to the Accountant. These shall be made available for audit. If an estimate specifically provides for the use of these materials, no adjustments are necessary beyond showing the issues.

276. In April each year, the Engineer shall issue the following certificate :—

"Certified that the stock of surplus materials on 1st April with the several subordinates has been verified by me or my subordinates and the total stock in the District corresponds with the closing balance of last year as shown in the ledger in my office."

The Engineer shall make his own arrangements for getting statements, returns and other documents from his subordinates who are entrusted with the custody of these articles.

STOCK.

277. Materials bought and kept in stock for general use on works the cost of which cannot for any reason be charged direct to any work, shall be called "Stock" and borne on the Stock Register (Form No. 48). A lump sum provision shall be made once by the Board for the purchase of stock and the value of stock shall not at any time exceed this amount.

278. The value of the stock purchased shall be treated as an advance and the advance recouped as the stock issued on works is adjusted. The value of the stock in hand shall agree with the balance of the advance outstanding. The figures shall be so agreed every quarter or earlier if possible.

279. A consolidated stock register shall be maintained in the Engineer's office in Form No. 48 prescribed for Tools and Plant, one page being set apart for each kind of material. Besides quantity accounts, necessary details shall be given to show the purchase rate of each article. Receipts and issues for the District as a whole shall be entered in the register as they occur.

280. These materials can be used on works by debiting the cost thereof at purchase rates to the work and giving credit to the District Local Board and whenever they are so used, a statement showing the adjustments to be made shall be sent by the Engineer to the Accountant. Such statement shall be made available for audit.

281. In April, the Engineer shall issue a certificate under his signature as under and this shall be made available for audit, along with the ledger :—

"Certified that the balance of stock on 1st April with the several subordinates has been verified by me or my subordinates and the total stock in the District corresponds with the closing balance of last year as shown in the ledger in my office."

The Engineer shall make his own arrangements for getting statements, returns and other documents from his subordinates who are entrusted with the custody of these articles.

REGISTER OF IMMOVABLE PROPERTIES.

282. The register of immovable properties (Form No. 50) shall be maintained in three parts one for lands, one for buildings and one for water works. The register of roads (Form No. 49) shall be divided into two parts, one for metalled roads and the other for unmetalled roads. In the case of register of lands, the purpose for which the lands are acquired shall be noted. Annual income, if any, derived from the land shall be shown in the register. When new works are completed, they shall be entered in the appropriate register with the cost thereof and the entries shall be initialled by the Engineer. At the close of the year, a certificate shall be recorded in the register under the signature of the Engineer stating that the properties are in working order and are being used for the purpose for which they were intended. In the case of existing properties, the original cost or valuation made by the Engineer as well as the additions made to them from time to time or any increase in value shall be noted in the register.

REGISTER OF SECURITIES.

283. The register of securities (Form No. 51) shall show the name and designation of the officer or servant who has furnished security, the amount and nature of security, the date on which the bond, if any, is executed, the names of sureties and also the result of enquiries made by the Chief Officer regarding the existence and solvency of the sureties every year.

CATTLE POUND REGISTERS.

284. The cattle pound-keepers shall maintain the pound accounts in forms Nos. 53 to 59.

285. In the Local Board office a register shall be maintained in Form No. 52 to show the pound receipts. The register may be called the Cattle Pound Day Book and shall be a subsidiary register to the general cash book. The total of receipts shall be daily carried to the general cash book through the classified register of receipts. As soon as remittances are received from the pound-keepers, the amounts shall be credited in the register with the date of receipts and the name of the pound. The chalans accompanying the remittances shall be filed poundwar in separate files in serial order.

286. Another register shall be maintained to show the receipts from each pound. This shall be the subsidiary register of Cattle pound receipts. A separate page or pages shall be set apart for each pound and as soon as a remittance is received from the pound-keeper, it shall be credited in this register to the account of the pound concerned.

287. If any District Local Board considers the maintenance of poundwar accounts in the District Local Board Office unnecessary, the accounts in the aforesaid forms may be maintained in each Taluka Local Board Office only. The Taluka Local Boards shall remit to the Treasury for credit to the District Local Board the total collections every forthnight or at the end of each month as the District Local Bord may direct and these collections shall be taken in the District Local Board Office to the classified register of receipts, in which a column shall be assigned for each Taluka.

288. The surplus sale proceeds of impounded cattle shall in the first instance be credited to the deposits in the Board's accounts, the necessary entries being made in the register of deposits.

289. When a claim is preferred under section 17 of the Cattle-trespass Act, 1871, for any sum credited as the net sale proceeds of the unclaimed cattle, the original credit shall be traced in the deposit register. If, on investigation, the claim is established, the amount payable shall be paid under the written orders of the President and the payment shall be brought to account direct in the general cash book, the repayment being noted in the deposit register against the original credit entry. The surplus sale proceeds remaining unclaimed at the expiry of three months shall be transferred to the credit of cattle pound receipts by debit to deposits. These receipts shall be entered in the Day book as well as in the subsidiary register to the account of the pound concerned.

290. The remuneration of pound-keepers shall be paid twice a year. The amount due to each pound-keeper fixed at one-fourth of the collection shall be calculated by taking the six monthly totals of receipts entered in the poundwar subsidiary register.

The bill shall show the total collections for the period, and the one-fourth amount due to the pound-keeper. The date of payment and the voucher number shall be shown in the register. The pound-keepers' acquittance shall be obtained on the voucher itself or a separate receipt register may be maintained for obtaining the signature of the pound-keepers in token of their having received the amount of remuneration.

CHAPTER VIII.

TALUKA LOCAL BOARD.

291. The rules in Chapters I to VI shall, so far as may be, apply to Taluka Local Boards in respect of their transactions and the duties devolving on the Chief Officer, Engineer or Sub-divisional Officer shall be performed by the President of the Taluka Local Board and the duties devolving on the Accountant shall be performed by a clerk of the Taluka Local Board appointed in this behalf.

292. The accounts of the Taluka Local Board shall be kept in the following forms :—

Forms Nos. 4, 5, 6, 7, 8, 9, 10, 11, 12, 15, 16, 17, 18, 19, 20, 22, 27, 28, 29, 30, 31, 32, 33, 34, 35, 36, 37, 39, 40, 41, 42, 43, 44, 45, 46, 47, 48, 49, 50 and 52.

CHAPTER IX.

DISPENSARIES.

293. The accounts of grant-in-aid Civil Dispensaries shall be maintained in the manner and in such forms as may be prescribed in the rules made by the State Government for the management of dispensaries.

294. The accounts of grant-in-aid Veterinary Dispensaries shall be maintained in such manner and in such forms as may be prescribed under the rules made by the State Government for the management of Veterinary Dispensaries.

CHAPTER X.

UTILISATION OF THE CESS UNDER SECTION 95 OF THE BOMBAY LOCAL BOARDS ACT, 1923.

295. (*a*) A separate account shall be maintained by the Local Board of the district notified for the purposes of section 80-A showing (*i*) the gross proceeds of the cess under section 95, (*ii*) the net proceeds thereof (after deducting expenses of assessment and collection), (*iii*) the amount set apart for improvement of communications in irrigated tracts, and (*iv*) the amounts spent for improvement of communications in irrigated tracts.

(*b*) The District Local Board shall invariably consult the Irrigation Department at the beginning of the year as to the particular roads and bridges on which it is proposed to expend the cess.

(*c*) The District Local Board shall include a paragraph in the Local Boards Administration Report showing how the cess has been utilized in the previous year.

(*d*) The Audit Department shall be responsible for seeing that the proceeds of the cess are not appropriated by the District Local Board concerned to other items of expenditure without the orders of Government.

LOCAL BOARDS ACCOUNT FORM No. 1.

(*See* Rule 166.)

Return furnished by the Collector of *under Section 85 of the Bombay Local Boards Act (VI of 1923)*

showing the $\frac{\text{Actual Receipts}}{\text{Revised Estimate}}$ / *First Estimate* *of the Local Fund of the* $\frac{\text{District}}{\text{Taluka}}$

for the Year 19 -19 .

Sources as per section 75 of the Act.	Taluka Board of	Taluka Board of	Taluka Board of	Taluka Board of	Taluka Board of
Cess under section 93 of the Bombay Local Boards Act, 1923 ..					
Do. section 95					
Deduct expenses of assessment and collection					
Net amount credited*					
Sand and quarry fees					
Total, Receipts ..					

Taluka Board of	Taluka Board of	Taluka Board of	Taluka Board of	Taluka Board of	Taluka Board of	District Local Board's Receipts	District Total.

*This is the whole amount for the Taluka including the Municipal Districts, Municipal Boroughs and Cantonments.

Forwarded to the President of the $\frac{\text{District}}{\text{Taluka}}$ Local Board of

Office of the Collector of

Dated 19 . Collector.

LOCAL BOARDS ACCOUNT FORM No. 2.

(*See* Rule 169.)

Details of Cess under sections 93 and 95 of the Bombay Local Boards Act, 1923, on Lands within Municipal Districts, Municipal Boroughs and Cantonments.

Name of Municipality or Cantonment.	Net Amount of Cess.			Remarks.
	Rs.	a.	p.	

I certify, under section 79 of the Bombay Local Boards Act, 1923, that the above details are, to the best of my information, correct.

Dated 19 .

Collector.

LOCAL BOARDS ACCOUNT

(*See*

Return furnished by the District Local Board of under section 85 of leviable under section 93 of the Bombay Local Boards Act, 1923, which District during the

—	Taluka Board of	Taluka Board of	Taluka Board of	Taluka Board of	Taluka Board of
Net amount estimated by the Collector as per that Officer's return under section 93					
Do. do. 95 ...					
Do. Sand and quarry fees ...					
Deduct as follows, viz.—					
(1) Amount assigned to Municipalities and Cantonment Committees under section 79					
(2) Portion to be devoted to educational purposes under section 80.					
(3) Share of charges payable by District Local Board under section 78					
(4) Do. do. under section 81					
Total, Deductions ...					
Net amount at the disposal of the Taluka Local Board					
Contributions by the District Local Board					
Total ...					

Forwarded to the

Dated 19 .

FORM No. 3.

Rule 171.)

the Bombay Local Boards Act, 1923, showing the probable Amount of the Cess will be at the disposal of each Taluka Local Board in the said Year 19 –19 .

Taluka Board of	Taluka Board of	Taluka Board of	Taluka Board of	Taluka Board of	Taluka Board of	Total at the disposal of the District Local Board.	District Total.

Taluka Board of

President (or Chief Officer) of the District Local Board.

LOCAL BOARDS ACCOUNT FORM No. 4.

(*See* Rule 172.)

PART I.

THE DISTRICT LOCAL FUND.

District

Budget Estimate of the $\frac{\textit{Taluka}}{\textit{District}}$ *Local Board of* *for the Year 19 –19* .

Approved by the said Board at their meeting of the of 19 (and sanctioned by the District Local Board at their meeting of the of 19).

Notes.—In preparing this Budget Estimate attention should be given to section 89 of the Bombay Local Boards Act, 1923, and the following points :—

(*a*) What is expected to be paid (under proper sanction) during the year should be provided for—not the liability falling due within the year.

(*b*) For fixed charges the detail estimates should show the full amount of the sanctioned scale ; where it is found by experience that a saving will arise from any cause, a lump deduction may be made.

(*c*) The number of employees should be carefully stated in the detail estimates and checked ; the rate of pay should be stated, whenever possible, in order to admit of verification with the column of charge.

(*d*) In the case of every item of fluctuating charge, such as travelling allowances, contingencies, and the like, the actual expenditure of each of the three years last past should be noted for the purpose of comparison (*vide* Schedule B).

(*e*) For proposed outlay on original works, no entry may be made in the budget unless the provisions of section 89 have been complied with.

Revenue and Receipts.	Average 19 –19 (past 3 years).	Actuals 19 –19 (past year).	Estimate 19 –19 (current year).		Estimate 19 –19 coming year).	Remarks.
			Original	Revised		
REVENUE						
I. Land Revenue—						
1. Rent of Fisheries						
2. Sand and Quarry Fees						
3. Miscellaneous						
Total, Land Revenue ..						
II. Local Rates—						
Cess on Lands (sec. 93, L. B. Act) ..						
Water Rate (Irrigation Cess) (sec. 95, L. B. Act)						
Other Taxes						
Contribution from the State Government in lieu of one anna cess on Excise Revenues						
Village Service Fund						
Miscellaneous						
Total, Local Rates ..						

EXPENDITURE.	Average, 19 –19 (past 3 years).	Actuals, 19 –19 (past year).	Estimate, 19 –19 (current year).		Estimate, 19 –19 (coming year).	Remarks.
			Original.	Revised.		
EXPENDITURE						
1. Refunds—						
Land Revenue ...						
Local Rates ...						
Total, Refunds ...						
2. Interest—						
Interest on Loans ...						
Other Items ...						
Total, Interest ...						
3. General Administration—						
Pay of Establishment ...						
Travelling Allowance of Establishment ...						
Travelling Allowances of L. B. members ...						
Contingencies ...						
Total, General Administration.						
4. Police—						
Establishment ...						
Contingencies ...						
Refunds ...						
Cattle pounds—						
(*a*) New works ...						
(*b*) Repairs ...						
Total, Police ...						
5. Education—						
1. Primary Education						
2. Schools, other than primary Schools ...						
Technical						
Grants-in-aid to Schools other than Primary ...						
Scholarships in Schools other than Primary ...						
Miscellaneous ...						
Total, Education						

REVENUE AND RECEIPTS.	Average, 19 –19 (past 3 years).	Actuals, 19 –19 (past year).	Estimate, 19 –19 (current year).		Estimate, 19 –19 (coming year).	Remarks.
			Original.	Revised.		
REVENUE—*contd.*						
III. Interest—						
Interest on Investments—						
For Educational Purposes.						
For Medical Purposes ...						
Interest on Overdue payments						
Other Items						
Total, Interest ...						
IV. Police—						
Receipts under Cattle Trespass Act						
Receipts under the Parsons Acts.						
Receipts under the Public Conveyance Act ...						
Other Items						
Total, Police ...						
V. Education—						
1. Primary Education ...						
2. Fees from Schools other than primary Schools...						
Contributions from the State Government for education other than primary education						
Other Contributions ...						
Income from Endowments ...						
Miscellaneous—						
Other items						
Total, Education ...						

EXPENDITURE.	Average, 19 -19 (past 3 years).	Actuals, 19 -19 (past year).	Estimate, 19 -19 (current year).		Estimate, 19 -19 (coming year).	Remarks.
			Original.	Revised.		
EXPENDITURE—*contd.*						
6. Medical—						
Establishment						
Cost of Medicine ..						
Contingencies						
Other charges						
Contribution to the State Government						
Other Contributions ..						
Buildings—						
(*a*) Original Construction						
(*b*) Repairs						
Total, Medical ..						
7. Public Health—						
(1) Establishment—						
(*a*) Pay ..						
(*b*) Allowances ..						
(*c*) Contingencies ..						
(2) Vaccination Charges ..						
(3) Sanitation Charges ..						
(4) Epidemic Charges ..						
(5) Fairs						
(6) Miscellaneous ..						
Total, Public Health ..						
Minor Departments—						
Horse Fairs						
Cattle Fairs						
Veterinary Dispensaries ..						
Miscellaneous						
Stud Charges						
Total, Minor Departments ..						

REVENUE AND RECEIPTS.	Average, 19 —19 (past 3 years).	Actuals, 19 —19 (past year).	Estimate, 19 -19 (current year).		Estimate, 19 —19 (coming year).	Remarks.
			Original.	Revised.		
REVENUE—*contd.*						
VI. Medical—						
Hospital Fees						
Sale of Medicines ..						
Income from Endowments ..						
Contributions from the State Government						
Other Contributions ..						
Sale proceeds of unserviceable articles						
Miscellaneous						
Total, Medical ..						
VII. Public Health—						
1. Contributions from the State Government ..						
2. Other Contributions ..						
3. Receipts in connection with Fairs						
4. Other Receipts ..						
Total, Public Health ..						
VIII. Minor Departments—						
Veterinary Dispensaries Receipts						
Horse Fairs						
Cattle Fairs						
Contributions from the State Government ..						
Other Contributions ..						
Miscellaneous						
Total, Minor Departments ..						
VIIIA. Industries—						
Receipts under the Bombay Weights and Measures Act, 1932						
Total, Industries ..						
IX. Miscellaneous—						
Sale of Old Stores and Materials (not coming under Civil Works)						
Rents						
Contributions from the State Government ..						
Cash Recoveries of previous years						
Miscellaneous ..						
Total, Miscellaneous ..						

EXPENDITURE.	Average, 19 – 19 (past 3 years).	Actuals, 19 – 19 (past year).	Estimate 19 –19 (current year)		Estimate, 19 – 19 (coming year).	Remarks.
			Original.	Revised.		
EXPENDITURE—*contd.*						
8-A. Industries—						
Expenditure in connection with the Bombay Weights and Measures Act, 1932—						
(1) Establishment—						
(*a*) Pay						
(*b*) Allowances ..						
(*c*) Contingencies—						
(*i*) Recurring ..						
(*ii*) Non-recurring ..						
(2) Amount creditable to the State Government,						
Total, Industries ..						
9. Superannuations, etc.—						
Pensions—						
(*a*) Administration ..						
(*b*) Public Health ..						
(*c*) Public Works ..						
Gratuities—						
(*a*) Administration ..						
(*b*) Public Health ..						
(*c*) Public Works ..						
Contribution to the Provident Fund—						
(*a*) Administration ..						
(*b*) Public Health ..						
(*c*) Public Works ..						
Pensionary Contributions to the State Government—						
(*a*) Administration ..						
(*b*) Public Health ..						
(*c*) Public Works ..						
Other Contributions including Payments from Provident Fund						
Total, Superannuations ..						
10. Miscellaneous—						
Donation for Charitable Purposes ..						
Contributions to the State Government						
Other Contributions ..						
Interest on Loans ..						
Miscellaneous and Unforeseen Charges						
Miscellaneous Refunds ..						
Total, Miscellaneous ..						
11. Famine Relief— ..						
Charitable Relief ..						
Public Works ..						
Miscellaneous						
Total, Famine Relief ..						

REVENUE AND RECEIPTS.	Average, 19 – 19 (past 3 years).	Actuals, 19 – 19 (past year).	Estimate, 19 -19 (current year).		Estimate, 19 – 19 (coming Year).	Remarks.
			Original.	Revised.		
REVENUE—*concld.*						
X. Minor Works—						
Local Canal Receipt ..						
Total, Minor Works ..						
XI. Civil Works—						
Rents of Buildings and Lands						
Sale of Buildings and Lands..						
Sale of Stores and Materials..						
Canal and Ferry Receipts ..						
Tolls on Roads.. ..						
Travellers' Bungalow Fees..						
Dharamshala Fees ..						
Contributions from the State Government ..						
Other Contributions ..						
Grants from the State Government						
Sale proceeds of fruits and trees						
Rent of tools, etc. ..						
Miscellaneous						
Total, Civil Works ..						
Total Revenue .. Rs.						
XII. Suspense Account—						
Deposits						
Chavdi Deposits ..						
Advances						
Popular contributions for specific objects ..						
Grants received from the State Government						
Provident Fund.. ..						
Loans from the State Government						
Loans from the public ..						
Total Suspense Account..						
Total, Receipts ..						
Balance on 1st April. Revenue ..						
Balance on 1st April. Government Grants						
Balance on 1st April. Other Suspense Accounts ..						
GRAND TOTAL .. Rs.						

EXPENDITURE.	Average 19 – 19 (past 3 years).	Actuals, 19 – 19 (past year).	Estimate, 19 –19 (current year).		Estimate, 19 – 19 (coming year).	Remarks.
			Original.	Revised.		
EXPENDITURE—*concld.*						
12. Civil Works—						
Buildings—						
New Works						
Repairs						
Communications—						
New Works						
Repairs						
Other Public Improvements—						
New Works						
Repairs						
Pay of Establishment—						
(*a*) Permanent ...						
(*b*) Temporary ...						
Allowances						
Contingencies ...						
Bungalow and Dharamshala Establishment and Contingencies						
Contributions to the State Government						
Other Contributions ...						
Miscellaneous ...						
Total, Civil Works ...						
Total Expenditure chargeable to Revenue						
13. Suspense Account—						
Deposits						
Chavdi Deposits ...						
Advances						
Expenditure from popular contributions for specific objects						
Expenditure from the State Government grants ...						
Provident Fund ...						
Repayment of Loans from the State Government ...						
Repayment of Loans from the Public ...						
Total, Suspense Accounts ...						
Total, Expenditure ...						
Balance on 31st March. { Revenue ... Government Grants Other Suspense Accounts ...						
GRAND TOTAL ... Rs.						

Original Works recommended in order of Urgency in the Financial Year 19 -19 .

Description of work.	Estimated cost.	Amount previously expended.	Amount required to complete.	Amount proposed for 19 - 19 .
1	2	3	4	5

Estimated annual income.*			Remarks.
Gross income.	Estimated cost of up-keep and repairs.	Net income.	
6	Based on column 2. 7	8	9

* To be completed for remunerative works only.

Chief Officer.

Dated

President, Taluka/District Local Board.

Dated

LOCAL BOARDS ACCOUNT FORM No. 4.

(*See* Rule 172)

Part II.

LOCAL BOARD BUDGET ESTIMATE.

Abstract of the Estimated Expenditure on Public Works for the Year from 1st April 19 to 31st March 19 .

Classification.	Estimate for 19 .				Total.	Remarks.
	By Government Executive Engineer.		By Local Board's own Agency.			
	Original Works.	Repairs.	Original Works.	Repairs.		
Civil Buildings						
Land Revenue Buildings ...						
Administration						
Minor Departments						
Educational						
Law and Justice						
Police						
Medical						
Public Works Buildings ...						
Miscellaneous						
Grand Total ... Rs.						
Deduct—Outlay from contributions ..						
Net Total ... Rs.						

Classification.	Estimate for 19 .				Total.	Remarks.
	By Government Executive Engineer.		By Local Board's own Agency.			
	Original Works.	Repairs.	Original Works.	Repairs,		
Communications.						
Metalled Roads— Bridged and drained throughout ...						
Partially bridged and drained.						
Unmetalled Roads— Bridged and drained throughout ...						
Partially bridged and drained.						
Roads— Banked and surfaced with "murum" or similar material, but not drained ...						
Banked, but not surfaced, partially bridged and drained ...						
Cleared, partially bridged and drained ...						
Cleared only ...						
Boat-bridges and ferries ...						
Accommodation for travellers ...						
Arboriculture ...						
Miscellaneous ...						
Grand Total ... Rs.						
Deduct—Outlay from contributions ...						
Net Total ...Rs.						

Classification.	Estimate for 19 .				Total	Remarks.
	By Government Executive Engineer.		By Local Board's own Agency.			
	Original Works.	Repairs.	Original Works.	Repairs.		
Miscellaneous Public Improvements.						
Improvements to Towns ..						
Markets						
Paving and streets ..						
Water supply						
Sewerage and drainage ..						
Mines						
Lighting						
Miscellaneous						
Total ..						
Deduct—Outlay from contributions						
Net Total.. Rs.						
Total Works and Repairs Rs.						
10 % Establishment charges on works executed by the P. W. D. ..						
Tools and Plant						
Contingencies						
GRAND TOTAL .. Rs.						

President, Local Board.

LOCAL BOARDS ACCOUNT FORM No. 4.

(*See* Rule 172)

Part III.

THE DETAILED ESTIMATE OF ORIGINAL WORKS.

Notes.

1. The works to be detailed in this part should be divided into two distinct group namely—

(1) Those to be executed by P. W. Agency.

(2) Those to be executed by Local Board's own employees.

The detail under each group should be shown separately in the order of classification prescribed in Part II and not in the order of talukas.

2. The lump sum, if any, provided for unforeseen and minor works should also be separately shown under each head of the said classification.

3. If the total cost of the work is to exceed Rs. 500 or in the case of a road Rs. 50 per mile, the plans and estimates for the work should be prepared or approved by the Government Executive Engineer or Engineer of the Board approved by the State Government, and this fact should be stated in the column of remarks.

4. If any works are exempted from the levy of establishment charges, a reference should be given in the remarks column to the No. and date of the authority.

Detail of the Budget Estimate for Original Works in the *District / Taluka*

for 19 .

Head of Classification.	Taluka.	Locality.	Item No.	Project or Work.

Amount of Estimate.	Outlay.		Grant, 19 .		Item No.	Remarks and References.
	Actual to end of 19 .	Probable during 19 .	Amount.	Total.		

LOCAL BOARDS ACCOUNT FORM No. 4.

Part IV.

Detail of the Budget Estimate for Repairs in the *District / Taluka* *for 19* .

Items.		Estimate, 19 .		Estimate, 19 .		Remarks.
No. of Item.	Nature of Repairs.	Amount.	Total.	Amount.	Total.	
		Rs.	Rs.	Rs.	Rs.	

LOCAL BOARDS ACCOUNT FORM No. 4.

Part V.

Detail of the Budget Estimate for Tools and Plant in the *District / Taluka* *for 19* .

Items.		Estimate, 19 .		Estimate, 19 .		Remarks.
No. of Item.	Nature of Repairs.	Amount.	Total.	Amount.	Total.	
		Rs.	Rs.	Rs.	Rs.	

N.B.—Details of Tools and Plant required for works to be carried out by P. W. Agency and those for Local Boards' own employees should be shown distinctly in this part.

LOCAL BOARDS ACCOUNT FORM No. 4.

SCHEDULE A.

Schedule showing Details of Estimated Contributions from Private Persons and Municipalities.

[Accountant-General's Printed General Letter No. L.F. 17804, dated 2nd October 1894.]

From whom received.	Particulars of works or objects towards which contributed.	Amount.	Remarks.
	Total Rs. ..		

LOCAL BOARDS ACCOUNT FORM No. 4.

SCHEDULE B.

Schedule showing the Detail of Estimated Charges as well as Actuals for the past three years of the items of fluctuating charges provided for in the Budget Estimate for 19 .

——	Estimate, 19 . .	Actual for 19 .	Actual for 19 .	Actual for 19 .	Remarks.

LOCAL BOARDS ACCOUNT FORM No. 4.

APPENDIX A.

Memo explaining the Cause of Increase and Decrease between the Estimated Receipts and Expenditure in 19 –19 compared with the Estimate for 19 –19 .

Nature of Receipts and Payments.	19 –19 .	19 –19 .	Increase in 19 –19 .	Decrease in 19 –19 .	Explanation or Cause.

LOCAL BOARDS ACCOUNT FORM No. 4.

APPENDIX B.

THE LOCAL BOARD OF THE TALUKA / DISTRICT

Memo showing how the Balance on the 1st April 19 has been arrived at

Actual Balance, 1st April 19	...	...	...	Rs.
Add—				
Estimated Receipts, 19	...	...	...	,,
				Rs.
Deduct—				
Estimated Charges, 19	...	...	...	,,
Estimated Balance, 19	...	...	...	Rs.

LOCAL BOARDS ACCOUNT FORM No. 4.

APPENDIX C.

Memo of the Establishment Charges provided for in the Budget Estimate of the Local Board of Taluka/District for 19 .

No.	Designation or Particulars of Appointment.	Monthly Pay.	Annual Cost.	Remarks.

LOCAL BOARDS ACCOUNT FORM No. 4.

APPENDIX D.

Statement showing the Details of the Fixed Receipts and Charges provided for in the Budget Estimate of the Local Board of the Taluka/District for 19 .

Particular.	Reference to the Order sanctioning the Amount.	Amount.

LOCAL BOARDS ACCOUNT FORM No. 4.

APPENDIX E.

Statement showing Details of Government and Municipal Grants to Local Board Medical and Veterinary Dispensaries and other Receipts.

Dispensary at	Government Grant as per Appendix D.	Municipal Grant as per Appendix D.	Other Receipts.				Total.	Remarks.
Total ...								

LOCAL BOARDS ACCOUNT FORM No. 4.

APPENDIX F.

Statement showing Details of Establishment, Travelling Allowance and Contingent Charges of the Local Board Medical and Veterinary Dispensaries.

Dispensary at	Establishment as per details in Appendix C.	Travelling Allowance.	Contingencies.							Total, Contingencies.	Petty Construction and Repairs as per Parts III and IV of the Budget.	Grand Total.
			House-rent of Sub-Asst. Surgeon.	Dispensary Rent.	Medical Stores.	Diet of Patients.	Country Medicines.	Purchase of, and repairs of, furniture.	Miscellaneous.			
Total ...												

President, District Local Board.

LOCAL BOARDS ACCOUNT FORM No. 4.

APPENDIX G.

Estimate of Investment and Interest derived thereon, for the Budget Year 19 –19 .

—	Budget Estimate of			Revised Estimate of
	Government Promissory Notes at per cent.	Municipal or Port Trust Bonds at per cent.	Interest.	Government Promissory Notes at per cent.
			Rs. a. p.	
Opening Balance				
Received or expected to be received ..				
Total ..				
Investment realized or intended to be sold ..				
Closing Balance ..				

Revised Estimate of		Actuals of			Remarks. [State in this column whether the investment is deposited with the Accountant General for safe custody or whether other arrangements exist for holding these Notes.]
Municipal or Port Trust Bonds at per cent.	Interest.	Government Promissory Notes at per cent.	Municipal or Port t ust Bonds at per cent.	Interest.	
	Rs. a. p.			Rs. a. p.	

President, District Local Board.

LOCAL BOARDS ACCOUNT FORM No. 5.

(*See* Rule 178.)

No. of 19 .

Dated 19

MEMO.

The undersigned has the honour to forward "Statement of Re-appropriations and Allotments" for the Month 19 .

President, Local Board of

To

THE COLLECTOR, DISTRICT.

Statement of re-appropriations and allotments approved by the Local Board of during the Month of 19 .

Consecutive No.	From					To				Remarks [If the reappropriation or allotment is for a work to be executed by the Government Executive Engineer that fact should be noted in this column by writing the words "by the Government Executive Engineer".]
	Main Head.	Budget Item. 3		Works, Service, etc.	Balance available.	Main Head.	Sub-head.	Works, Service, etc.	Amount.	
		Item No.	Amount.							
1	2			4	5	6	7	8	9	10

LOCAL BOARDS ACCOUNT FORM No. 6.

(*See* Rule 10.)

Standard Form "General 113" to be used.

LOCAL BOARDS ACCOUNT FORM No. 7.

(*See* Rule 182.)

General Cashbook.

Receipts.

Month and date.	Reference to classified abstract.	Particulars of receipts and from whom received.	Serial No. of receipt and chalan.	Amount.	Total.	Remitted to Treasury.	
						No. and date of chalan.	Amount.
1	2	3	4	5	6	7	8
				Rs. a. p.	Rs. a. p.		Rs. a. p.

Expenditure.

Month and date.	Reference to classified abstract.	Particulars of charges and to whom paid.	No. of cheque.	Serial No. of disbursement voucher.	Amount.	Total.
9	10	11	12	13	14	15
					Rs. a. p.	Rs. a. p.

LOCAL BOARDS ACCOUNT FORM No. 8.

(*See* Rule 192.)

Classified Register of $\frac{\textit{Receipts}}{\textit{Payment}}$ $\frac{\textit{District}}{\textit{Taluka}}$ *Local Board of* *for the year* 19 -19

Major Head

Month and date.	No. of Chalan or Voucher.	Minor heads and Sub-heads.					Total.	Initials of Accountant and Chief Officer.
	Budget Provision.							
	Budget Grant for each Taluka Local Board.	Rs. a. p.	Rs. a. p.	Rs. a. p.	Rs. a. p.	Rs. a. p.	Rs. a. p.	

Budget Provision .. Rs.

Month and date.	No. of Chalan or Voucher.	Minor heads and Sub-heads.					Total.	Initials of Accountant and Chief Officer.
	Budget Provision.							
	Budget Grant for each Taluka Local Board.	Rs. a. p.	Rs. a. p.	Rs. a. p.	Rs. a. p.	Rs. a. p.	Rs. a. p.	

LOCAL BOARDS ACCOUNT FORM No. 9.

(*See* Rules 25 and 196.)

Register of Cheques issued by the*

Date.	No. of cheque.	Items for which Cheque is drawn.					Amount of cheque.		
		Voucher No.	Description of item.	Amount of item.					
				Rs.	a.	p.	Rs.	a.	p.

Board during the Year 19 .

In whose favour.	Initials of President.	Date of encashment.	Disposal.				Remarks.
			Date of making over to the party.	Amount of Cash transferred to Petty Cash Book.			
				Rs.	a.	p.	

**Note.*—To be permanently preserved.

LOCAL BOARDS ACCOUNT FORM No. 10.

(*See* Rule 26.)

Cheque Form.

The form (now in use) is to be used.

LOCAL BOARDS ACCOUNT FORM No. 11.

(*See* Rule 197.)

Treasury Pass Book.

Dr. *Cr.*

19		Initials of Treasury Officer.	Amount.			19		Initials of Treasury Officer.	Amount.		
	To Balance		Rs.	a.	p.		By Cheque No.		Rs.	a.	p.
		Carried over.						Carried over.			

LOCAL BOARDS ACCOUNT FORM No. 12.

(*See* Rule 198.)

Transfer Entries for the month of *19* .

Amount.	Transferred from	Transferred to	Amount.	Initials of President. / Chief Officer. / Engineer.

LOCAL BOARDS ACCOUNT FORM No. 13.

(*See* Rule 200.)

Demand and Collection Register of Toll and Ferries.

Serial No.	Nature of demand.	No. and date of order sanctioning the transaction.	Name and address of person by whom demand is payable.	Demand.		Arrears.	Total demand.
				Instalments.	Amount.		
1	2	3	4	5		6	7

Initials of Chief Officer or Engineer.	No. and date of receipt.	Instalments.	Amount.	Balance due.	Initials.	Remarks.
8	9	10		11	12	13

LOCAL BOARDS ACCOUNT FORM No. 14.

(*See* Rule 208.)

Demand and Collection Register of Taxes.

Serial No.	No. of House or Conveyance.	Name of owner.	Arrears.	Current demand.	Total.		

No. and date of receipt.	Collection.	Remissions.	Outstandings.	Excess Collection.	Remarks.

LOCAL BOARDS ACCOUNT FORM No. 15.

(*See* Rule 211.)

Petty Cash Book of the *Local Board for the year 19 –19* .

Dr.

Date.	No. of cheque.	From whom received.	Particular.	Amount other than interest awaiting disbursement.	Imprest.	Total.
1	2	3	4	5	6	7

Date.	No. of Voucher.	To whom paid.	Particular.	Disbursement from amounts shown in column 5.	Disbursement from Imprest.	Total.
8	9	10	11	12	13	14

LOCAL BOARDS ACCOUNT FORM No. 16.

(*See* Rule 212.)

Register of Undisbursed Amounts.

Dr.

Serial No. of receipt.	Serial No. of payment.	Date.	No. of voucher.	From whom received.	Particulars.	Amount.	Total.

Cr.

Serial No. of receipt.	Serial No. of payment.	Date.	No. of voucher.	To whom paid.	Particulars.	Amount.	Total.

LOCAL BOARDS ACCOUNT FORM No. 17.

(*See* Rules 213 and 217.)

Taluka / District Local Board — *Register of* Advances / Deposits.

Month and date.	Name of party.	Particulars of advance or deposit.	Voucher or receipt No.	Amount.	Monthly total.	Repayment in cash or adjustments in				
						April.	May.	June.	July.	August.
1	2	3	4	5	6	7	8	9	10	11
				Rs.	Rs.	Rs.	Rs.	Rs.	Rs.	Rs.

September.	October.	November.	December.	January.	February.	March.	Total repayments.	Date of repayment or No. of voucher of adjustment.	Balance of each deposit.	Remarks.
12	13	14	15	16	17	18	19	20	21	22
Rs.	Rs.	Rs.	Rs.	Rs.	Rs.	Rs.	Rs.			

Note.—This register may, if necessary, by maintained in the form of a personal ledger, all transactions referring to one party being noted together one below the other.

LOCAL BOARDS ACCOUNT FORM No. 18.

[*See* Rule 219 (*i*).]

Register of Private Contributions.

Serial No.	Name of locality.	From whom received.	Purpose for which the Contributions have been received.	Nature of Budget heading as to classification of work.	Credits.	
					No. and date of chalan by which the amount is received.	Amount.
1	2	3	4	5	6	7

Chief Officer's initials.	Debits.		Chief Officer's initials.	Unspent balance transferred to the register for the succeeding year.	Remarks.
	No. and date of cheque and voucher by which paid.	Amount.			
8	9	10	11	12	13

LOCAL BOARDS ACCOUNT FORM No. 19.

[*See* Rule 220 (*i*).]

Cash Account of the Local Fund of the $\frac{\textit{District}}{\textit{Taluka}}$ *Local Board for the month of*

Particulars.	Amount.	Particulars.	Amount.
	Rs.		Rs.
To Revenue and Suspense account.		By Expenditure Suspense account	
Total receipts ...		Total expenditure ...	
Opening balance ...		Closing balance ...	
Total ...		Total ...	

Cess

Government grant

Receipts by Local Boards.

Total.

Outstanding cheques.

Cheques drawn on

Treasury.

[To be printed on reverse of Form No. 19.]

Statement of the Local Fund of the *District / Taluka* *for*

Memorandum of Balances, viz.

Name of Board.	Opening balance.	Receipts.	Total.	Payments.	Closing balance.
DISTRICT LOCAL BOARD— GENERAL EDUCATIONAL.					
Medical Dispensaries.					
1. ...					
2. ...					
3. ...					
4. ...					
5. ...					
6. ...					
Total ...					
Veterinary Dispensaries.					
1. ...					
2. ...					
3. ...					
4. ...					
5. ...					
6. ...					
Total ...					
Suspense Accounts ...					
Loans ...					
Deposits ...					
Chavadi deposits ...					
Permanent advance ...					
Investment account ...					
Advances ...					
Popular contributions for specified objects					
The State Government contribution					
Total ...					
Grand Total ...					

LOCAL BOARDS ACCOUNT FORM No. 20.

[*See* Rule 221 (*i*).]

Annual Account of Income and Expenditure of the $\frac{\textit{Taluka}}{\textit{District}}$ *Local Board for the Year 19 –19 .*

Particulars of Income.	Amount.	Particulars of Expenditure.	Amount.
Income.		*Expenditure.*	
Closing balance of last year.		1. Refunds and Drawbacks—	
I. Land Revenue—		Local rate refunds ..	
Revenue due to canals ...		Other revenue refunds ..	
Stone, sand and quarry receipts ...			
Local land revenue		Total, Refunds ..	
Rent of fisheries			
Miscellaneous		2. Land Revenue—	
		Assessment on District Local Board Lands and Miscellaneous	
Total, Land Revenue ...			
II. Local Rates—		3. Local Rates—	
Local rate		Expenses on collection of cess	
Village Service Fund ...		Law and Justice ..	
Contribution from the State Government in lieu of one anna cess on excise revenue ...		4. Interest—	
		Interest on loans on account of last year	
Wheel tax		Interest on loans on account of current year	
Irrigation cess		Other items ..	
Local Fund Cess on water rates ...			
Octroi receipts ...			
Miscellaneous			
Local Fund Cess on Forest revenue		Total, Interest ..	
Total, Local Rates ...		5. Administration—	
		Office establishment ..	
III. Interest—		Office contingencies (including Stationery and Printing) ..	
For educational purposes ...		Octroi establishment ..	
For medical purposes ...		Travelling allowance for establishment	
For other purposes			
		Travelling allowance for Local Board Members. ..	
Total, Interest ...			
		Total ..	
IV. Law and Justice ...			
V. Police—		6. Law and Justice—	
Receipts under Cattle Trespass Act		Courts of Law	
Public conveyance fund and other items		7. Police—	
Criminal deposits		Cattle pound charges—	
		Establishment	
		Remuneration to cattle pound keepers	
Total, Police ...			
Carried over Rs. ...		Carried over Rs. ..	

LOCAL BOARDS ACCOUNT FORM No. 20—*contd.*

Particulars of Income.	Amount.	Particulars of Expenditure.	Amount.
Brought forward Rs. ...		Brought forward Rs. ..	
VI. Education—		7. Police—*contd.*	
Education primary		Contingencies	
Education other than primary ...		Refunds of cattle pound collections	
Total, Education ...		Other charges	
VII. Medical—		Total .	
Hospital and Dispensary receipts..			
Sale of medicines			
Income from vaccination ...			
Income from endowments		8. Ports and Pilotage—	
Sale proceeds of investments ...		Subsidies to Steam Boat Companies.	
Sale proceeds of quinine ...			
Contributions from the State Government		9. Education—	
Other contributions ...		Education primary ..	
Sanitary fees and fines ...		Education other than primary.	
Other receipts			
Total, Medical ...		Total, Education ..	
VIII. Scientific and other Minor Departments—		10. Medical—	
Botanical and other public garden receipts		General Medical Establishment	
Veterinary receipts		Maternity Home	
Stallion fees		Hospitals and Dispensaries ..	
Receipts on account of experimental cultivation		Ayurvedic Dispensary charges	
Horse fairs		Vaccination Establishment and charges	
Cattle fairs		Sanitation charges ..	
Other exhibitions or fairs ...		Medical School and Colleges ..	
Miscellaneous		Miscellaneous	
Contribution from the State Government		Other charges	
Other contributions ...		Epidemic charges ..	
Total ...		Cost of quinine	
		Contributions to the State Government	
		Other contributions ..	
VIII-A. Industries—		Allowance for registration of births and deaths ..	
Receipts under the Bombay Weights and Measures Act, 1932 :—		Refunds	
(1) Verification			
(2) Re-verification ...		Total, Medical ..	
(3) Marking			
(4) Adjusting			
(5) Stamping			
(6) Other receipts (to be specified)		11. Scientific and Other Minor Departments—	
Total, Industries ...		Experimental cultivation ..	
IX. Receipts in aid of superannuation and compassionate allowance		Horse fairs	
		Cattle fairs	
Contribution for pensions or gratuities		Other exhibitions or fairs ..	
Carried over Rs. ...		Carried over Rs. ..	

LOCAL BOARDS ACCOUNT FORM No. 20—*contd.*

Particulars of Income.	Amount.	Particulars of Expenditure.	Amount.
Brought forward Rs. ...		Brought forward Rs. ...	
X Stationery and Printing—		11. Scientific and other Minor Departments—*contd.*	
Press Receipts ...		Agricultural improvements ...	
XI. Miscellaneous— ...		Veterinary charges ...	
Sale of old stores and materials		Bull and stallion charges ...	
Sale of Nazul (escheated) buildings and lands (sale of security bonds)		Botanical and other public gardens	
		Government stastics ...	
		Contributions to the State Government	
Contributions from The State Government		Other contributions ...	
		Total ...	
Other contributions ...		11-A. Industries—	
Fees under Prisons Act ...		Expenditure in connection with the Bombay Weights and Measures Act, 1932—	
Rent of District Local Board lands			
Other miscellaneous receipts...		(1) Establishment—	
Cash recoveries ...		(*a*) Pay ...	
		(*b*) Conveyance Allowance ...	
Withdrawals from deposits ...		(*c*) Local Allowance ...	
		(*d*) Travelling Allowance ...	
Contributions from owners of cars and lorries ...		(*e*) Contingencies—	
		(*i*) Recurring ...	
Refund		(*ii*) Non-recurring ...	
		(*f*) Rent	
Amount of Pot Phalni refunded by the State Government		(*g*) Pension or Provident Fund Contribution ...	
Interest on Investment ...		(*h*) Other charges ...	
Rent of District Local Board lands		(2) Amount credited to the State Government ...	
Sale proceeds of investments...			
Total ...		Total, Industries ...	
		12. Superannuation Allowances and Pensions—	
XII. Railways—		Pensions	
Gross Receipts ...		Gratuities	
Deduct—Working expenses ...		Contributions to the State Government ...	
Net receipts		Other contributions ...	
XIII. Irrigation Minor Works and Navigation— ...		Total ...	
Local canal receipts ...		13. Miscellaneous— ...	
		Donation for charitable purposes	
Carried over Rs. ...		Other local service for general benefit	

LOCAL BOARDS ACCOUNT FORM No. 20—*contd.*

Particulars of Income.	Amount.	Particulars of Expenditure.	Amount.
Brought forward Rs. ...		Brought forward Rs. ...	
XIV. Civil Works— ...		Dharmshala	
Tolls on Ferries and Roads ...		Rewards for the destruction of dogs, wild animals and snakes	
Rent of buildings and lands (other than Nazul escheated)		Other petty establishment and charges	
Sale of buildings and other property (other than Nazul escheated)		Miscellaneous and unforeseen charges ...	
Sale of stores and materials ...		Miscellaneous refunds ...	
Staging bungalow fees ...		Address	
Serai (Rest house) fees ...		Contributions to the State Government ...	
Refunds		Other contributions ...	
Sale proceeds of trees, grass etc.		Total ...	
Miscellaneous and Refunds ...		14. Famine Relief— Charitable Relief ...	
Contributions from the State Government for Civil Works		15. Railways— Interest on loans borrowed for Railway purposes (Repayment of loans and Miscellaneous Railway expenditure) ...	
Other contributions ...		16. Minor Works and Navigation—	
Civil Works in charge of Public Works Department Officers...		Local canal charges ...	
Total, Civil Works ...		17. Civil Works—Public Works —Buildings—	
Total Income excluding opening balance ...		(a) Educational—Original ...	
XV. Suspense Account—		Do.—Repairs ...	
Loans		(b) Medical—Original ...	
Deposits		Do.—Repairs. ...	
Advances recovered ...		(c) Other—Original ...	
Cash recoveries		Do.—Repairs ...	
Investment in Bank ...		Communications— ...	
Provident Fund		(a) Original Works ...	
Village Water Supply grant ...		(b) Repairs	
Total, Suspense Account ...		Water Supply and Water Works—	
Total receipts excluding opening balance		(a) Original works ...	
Total receipts including opening balance		(b) Repairs	
Carried over Rs. ...		Drainage Works—	
		(a) Original Works ...	
		(b) Repairs	
		Chavdi Repairs and Original Works	
		Toll tax	
		Other works of Improvement ...	
		Establishment and contingencies appertaining to Public Works	
		Tools and Plant ...	
		Staging bungalows and serais (Rest house) establishments and charges ...	
		Stock Account charges ...	
		Arboriculture charges ...	
		Miscellaneous ...	
		Carried over Rs. ...	

LOCAL BOARDS ACCOUNT FORM No. 20—*concld.*

Particulars of Income.	Amount.	Particulars of Expenditure.	Amount.
Brought forward Rs. ..		Brought forward Rs. ..	
		17. Civil Works—Public Works—*contd.*	
Incidence of taxation per head of population ..		Contributions to the State Government ..	
Incidence of Income (excluding balances per head of population) ..		Other contributions ..	
		Total, Civil Works ..	
		Total Expenditure chargeable to current income ..	
		18. Railway construction met from borrowed funds	
		19. Suspense Account—	
		Investment in Banks ..	
		Cash recoveries (Provident Fund ..	
		Repairs to chavdis ..	
		Repayment of loans ..	
		Refund of deposits ..	
		Advances paid ..	
		Total, Suspense Account ..	
		Total Disbursements ..	
		Closing Balance on 31st March—	
		Revenue ..	
		Suspense Account ..	
		Investments ..	
		Deposits ..	
		Chavdi deposits	
		Advances ..	
		Provident Fund ..	
		Contributions (other than the State Government for specific objects) :	
		Government grants— ..	
		(*a*) Roads ..	
		(*b*) Water Supply ..	
		Miscellaneous Grant ..	
		Total ..	
		Grand Total ..	

LOCAL BOARDS ACCOUNT FORM No. 21.

(*See* Rule 224.)

AUDIT REGISTER.

Fixed Establishment of the *for the four years commencing 1st April 19* .

Major Head :— Minor Head :— Detailed Head :—

Orders—No. and date and substance in brief.	Name of Section.	Sanctioned pay of Section			Amount and date of payment for the month of												Remarks.
		Maximum.	Minimum.	Actual of 1st April.	April.	May.	June.	July.	August.	September.	October.	November.	December.	January.	February.	March.	

LOCAL BOARDS ACCOUNT FORM No. 21-A.

(*See* Rule 49.)

Statement of Proposition for revision of Establishment of $\frac{\textit{Taluka}}{\textit{District}}$ *Local Board,*

Order sanctioning present establishment.		Office to which the proposition refers.	Nature of charge.							
			Present scale.						Proposed scale.	
					Pay.					
No.	Date.		Number.	Designation.	Minimum.	Increment.	Maximum.	Average cost.	Number.	Designation.
1	2	3	4	5	6	7	8	9	10	11

Nature of charge—*contd.*				Proposition.						Grounds of proposition.	No. and date of Board's Resolution.
Proposed scale.—*contd.*				Permanent.		Temporary.					
Pay.			Average cost.	Increase per month.	Decrease per month.	Increase per month.		Decrease per month.			
Minimum.	Increment.	Maximum.		Amount.	Amount.	Period.	Amount.	Period.	Amount.		
12	13	14	15	16	17	18	19	20	21	22	23

Chief Officer.

Date President.

LOCAL BOARDS ACCOUNT FORM No. 22.

(*See* Rule 234.)

Travelling Allowance Register for the Year 19

Name of Official

Statutory Limit of T. A.

Date of journey.	Amount of Bill.	Admission.		No. and date of payment vouchers.	Remarks.
		Date.	Initials of President. / Chief Officer.		
1	2	3	4	5	6

LOCAL BOARDS ACCOUNT FORM No. 23.

(*See* Rule 237.)

Pay Bill and Acquittance Roll of the Permanent/Temporary *Establishment of the* Taluka/District *Local Board,* , *for the Month of* 19 .

Name of incumbent. 1	Name of post. 2	Substantive pay.* 3		Leave salary. 4		Officiating pay. 5		Total of columns 3–5. 6		Pay officiating pay or leave salary held over for future payment. 7	
		Rs.	a.	Rs.	a.	Rs.	a.	Rs.	a.	Rs.	a.
	Total ..										

Deduct—Undisbursed pay refunded as detailed below:—

Add—On account of Provident Fund contribution

Net sum required for payment

Recoveries and fines. 8		Net charge for each section. 9		Deductions. Income tax. 10		Provident Fund subscription. 11		12		13		14		Net amount payable. 15		Signature of payee. 16
Rs.	a.	Rs.	a.	Rs.	a.	Rs.	a.	Rs.	a.	Rs.	a.	Rs.	a.	Rs.	a.	
Total Rs. ..																
..																
Rs. ..																

*Personal pay or special pay or compensatory allowance (if any) should also be shown in this column as a separate entry below substantive pay.

Certified—(1) That I have satisfied myself that all pay, leave salary and officiating pay etc., included in bills drawn in the month of 19 (the last preceeding month) with the exception of those detailed below (of which the total has been refunded by deduction from this bill), have been disbursed to the proper persons and that their receipts have been taken in acquittance rolls filed in my office with receipts stamps duly cancelled for any payment in excess of Rs. 20 and that all leave and promotions etc., have been entered in the service books of the officials concerned. (2) That the bill has been checked with the sanctioned scale recorded in the sale register. (3) That all persons on pay not exceeding Rs. 15 for whom pay has been drawn in this bill have actually been entertained during the month.

Dated 19 .

Pay Rs.

Examined and entered.

Accountant.

President, T. L. B.

Chief Officer, Engineer.

LOCAL BOARDS ACCOUNT FORM No. 24.

(*See* Rule 240.)

Provident Fund Day-Book.

Date.	Member's Subscription.	Board's Contribution.	Refund of Withdrawals (advances) from the Fund.	Interest on Current and Fixed Deposits.	Interest on loans recovered.	Total. receipts.	Grand Total with opening balance.
1	2	3	4	5	6	7	8
	Rs. a. p.	Rs. a. p.		Rs. a. p.	Rs. a. p.	Rs. a. p.	Rs. a. p.

Date.	Fixed or other deposits.	Withdrawals (Advances).	Settlement of Account.			Total Payment.	Grand Total with closing balance.
			Member's Subscription.	Boards Contribution.	Interest.		
9	10	11	12	13	14	15	16
			Rs. a. p.	Rs. a. p.	Rs. a. p.	Rs. a. p.	Rs. a. p.

LOCAL BOARDS ACCOUNT FORM No. 24-A.

(*See* Rule 240.)

Name *Number* *Official Designation* *District*

Pay on 31st Mar. of preceding year.	Subscription.	Board's Contribution.	Refunds of withdrawals.	Total.	Withdrawals.	Monthly balance on which interest is calculated.	Remarks.
19 –19							
1	2	3	4	5	6	7	8
April ..							
May ..							
June ..							
July ..							
August ..							
September ..							
October							
November ..							
December ..							
January ..							
February ..							
March ..							
Total Rs.							

Balance from 19 –19 ..
Deposits and Refunds as above ..
Interest for 19 –19 ..

Total Rs. ..

Deduct—Withdrawals as above ..

Posted by

Checked by

Balance on 31st March 19 ..

Pay on 31st Mar. of preceding year.	Subscription.	Board's Contribution.	Refunds of withdrawals.	Total.	Withdrawals.	Monthly balance on which interest is calculated.	Remarks.
19 –19							
April ..							
May ..							
June ..							
July ..							
August ..							
September ..							
October ..							
November ..							
December ..							
January ..							
February ..							
March ..							
Total Rs.							

Balance from 19 –19 ..
Deposits and Refunds as above ..
Interest for 19 –19 ..

Total Rs. ..

Deduct—Withdrawals as above ..

Posted by

Checked by

Balance on 31st March 19

LOCAL BOARDS ACCOUNT FORM No. 25.

(*See* Rule 240.)

Broad Sheet of the *Provident Fund for the year 19 –19* .

No. of Account.	Ledger Folio.	Balance at commencement of year.	Receipts in the month of											
			April 19 .	May 19 .	June 19 .	July 19 .	August 19 .	September 19 .	October 19 .	November 19 .	December 19	January 19 .	February 19 .	March 19 .

Interest for the year.	Total of Receipts and Opening Balance.	Withdrawals in the month of												Closing Balance.	Total of Withdrawals and Closing Balance.	Remarks.
		April 19 .	May 19 .	June 19 .	July 19	August 19 .	September 19 .	October 19 .	November 19 .	December 19	January 19 ..	February 19 .	March 19 .			

Total as per Broad Sheet.
Total as per P. F. Day Book.
Initials of Accountant.
Difference.
Initials of the Chief Officer.

LOCAL BOARDS ACCOUNT FORM No. 26.

(*See* Rule 241.)

Register of Pension Payment Orders.

Name of Pension Payment Order and date.	Name of pensioner.	Monthly amount.	Date from which payable.	Remarks.
		Rs. a. p.		

LOCAL BOARDS ACCOUNT FORM No. 27.

(*See* Rule 242.)

Certificates.

1. Certified that I have satisfied myself that the amounts included in bills drawn 30 days previous to the date with the exception of those detailed below (of which the total amount has been refunded by deduction from this bill) have been disbursed to the officers therein named and their receipts taken in the Acquittance Roll.

Also that the charges drawn in this bill have not been included and passed in any previous bill.

Also that the allowances drawn for non-gazetted, ministerial or menial officers named below for journeys by road or boat do not exceed their actual travelling expenses, and that I am satisfied that in accordance with my orders they/he travelled by

Also that it was necessary for the officers for whom halting allowance at head-quarters is drawn to keep up the whole or part of their camp equipage during such halt and that the expense incurred on this account, details of which are given in the statement below, was not less than the halting allowance drawn.

2. Certified that the distances between places shown in the bill are correct, so far as I have been able to ascertain from District Officers.

3. Certified that no other member/officer/servant of the Board travelled with the person or persons for whom travelling allowance is claimed in this Bill, by road in the same private/public but reserved conveyance except

Head of Office.

PASSED for Rs. (*in words*)

Station ;

Dated 19 .

President, District Local Board.

Examined.

L. F. Accountant.

A { Pay Rupees (*in figures*)
Rupees (*in words*)

Dated 19 .

Chief Officer.

Travelling Allowance Bill of the Establishment of
for the Month of 19 Headquarters Station

Jurisdiction

Name	Designation.	Maximum pay of the Appointment.	Dates (and Hours, when necessary) of Journeys and Halts.		Route.		Purpose of Journey.	Kind of Journey i.e., by Road, Boat, Steamer or Rail (Mail or Ordinary).	Number of mile.	Allowances claimed	
										Mileage by Road or Boat or Actual Expenses.	
1	2	3	4		5		6	7	8	9	
			From	To	From	To				Rate.	Amount.
											Rs. a. p.
										Total	

Allowances claimed—*contd.*					Total of each line.	Remarks.	
Daily allowance.			Railway and Steamer Fares.				
10			11		12	13	
No. of days.	Rate.	Amount.	Class, single or double.	Amount.			
		Rs. a. p.		Rs. a. p.	Rs. a. p.		
						Allotment for 19 -19 . Expense including this bill.	Rs. a. p.
Total..						Balance ..	

Station : Rupees (*in words*) Contents Received.

Dated 19 .

Head of Office.

Page of Classified Register of Payments.

LOCAL FUND.

Voucher No.

for

Rs.

[*For use in Local Boards Account Office.*]

Total Amount of Bill ... Rs.

Checked.

L. F. Clerk

L. F. Accountant.

LOCAL BOARDS ACCOUNT FORM No. 28.

(*See* Rule 246.)

Contingent Bill.

Taluka/District Local Board of	Detailed Bill of Contingent Charges of the Month of 19 .

Head of Charge		No. of Voucher.

Serial No. of Sub-Vouchers.	Description of charges, and number and date of authority for all charges requiring special sanction.	Amount.		
		Rs.	a.	p.
	Rupees (*in words*)			
	Total Rs.			

Received Payment.

I certify that the expenditure charged in this bill could not, with due regard to the interests of the Board, be avoided. I have satisfied myself that the charges supported by sub-vouchers entered in this bill have been really paid with the exceptions noted below which exceed the balance of the permanent advance, and will be paid on receipt of the money drawn on this bill. Certified also that articles of Dead Stock paid for in this bill have been actually received and articles costing over Rs. 5 in each case have been duly entered in the relevant stock account at pages

Dated Name

Office

Pay Rupees

Examined

Accountant President/Chief Officer, Taluka Local Board.

Dated

Approved and paid by cheque No. dated for Rs.

President, District/Taluka Local Board.

LOCAL BOARDS ACCOUNT FORM No. 29.

(*See* Rule 249.)

Register of Contingent Charges of the Department, of the District, for the year 19 .

Disbursing Officer

Date.	To whom paid. Budget Grant for each head.	No. of Sub-Voucher Contingent Bill.	Contract Contingencies.									

Audited but not Countersigned Contingencies.

Total of each Contingent Bill.	Initials of Disbursing Officer.				Total of each Contingent Bill.	Initials of Disbursing Officer.

Date.	To whom paid. Budget Grant for each head.	No. of Sub-Voucher Contingent Bill.	Countersigned Contingencies.						Total of each Contingent Bill.	Initials of Disbursing Officer.	No. of Sub-Voucher Contingent Bill.

Special Contingencies.

							Total of each Contingent Bill.	Initials of Disbursing Officer.	Remarks.

LOCAL BOARDS ACCOUNT FORM No. 30.

[*See* Rule 254 (*i*).]

Register of Investments.

Serial No.	Date of purchase of security.	Particulars of investments.	Amount.		Initials of President. / Chief Officer.	Due date of recovery of interest and amount.	Interest recovered and date.	Initials of President. / Chief Officer.
			Cost.	Face Value.				
1	2	3	4	5	6	7	8	9
			Rs.	Rs.				

LOCAL BOARDS ACCOUNT FORM No. 31.

(*See* Rule 255.)

Register of Dead Stock or Movable Property.

Serial No.	Description of article.	Authority for purchase and date of purchase.	Number or quantity.	Value.	Intials of Head of Office.	Final disposal.					
						Number or quantity and nature of disposal.	Authority or voucher.	Amount realised and date of credit at treasury.	Balance in stock.	Initials of Head of Office.	Remarks.
1	2	3	4	5	6	7	8	9	10	11	12
				Rs. a. p.							

LOCAL BOARDS ACCOUNT FORM No. 32.

(*See* Rule 259.)

Estimate—Rs. *Register of Works.* Authority—

Serial No.	Name of work.	Expenditure to end of previous year.	Allotment for year.	Agency doing the work.
1	2	3	4	5

Order sanctioning the agency or contract.	Amount paid. 7		Total.	Remarks.
	No. and date of payment voucher.	Amount.		
6			8	9
		Rs. a. p.		

Notes.—(1) Incomplete works should be carried over to the next year's account with the total of expenditure up to the end of the present year.
(2) A few lines or less than half a page should ordinarily suffice for each work.

LOCAL BOARDS ACCOUNT FORM No. 33.

(*See* Rule 122.)

DISTRICT/TALUKA LOCAL BOARD.

Muster Roll of Daily Labour.

Sub-Division Section

Name of Work

For what month

Issued on

Paid from my imprest Rupees ( )

on

Unpaid wages of Rs. , have been taken to the Register

Signature and Designation of Officer, making payment.

Pay Rupees ( )

Accountant, D. L. B. Dated Chief Officer, D. L. B.

Paid by cheque No. Dated

by debit to

Voucher No. Dated Ledger page No.

Nominal Muster Roll.

Description. No.	Name (grouped according to classes).	Father's name.	Residence.	Dates. 1	2	3	4	5	6	7	8	9	10	11	12	13	14	15	16	17	18	19	20	21	22	23	24
		DAILY TOTAL ..																									
		Initials of person marking the daily attendance ..																									
		Initials of Inspecting Officer ..																									

25	26	27	28	29	30	31	TOTAL.	Rate.	Amount.	Fines etc.	Balance due.	Amount paid.	Signature or thumb impression of payee etc.	Dated initials and remarks of paying officer made at the time of payment.
							In words :—							

Dated signatures on closing the muster ..... Checked.

Checked, compared with dailies and found correct. Approved for Rs. ( ). Countersigned.

Mustering Karkun. *Overseer.* *Dated initials of S. D. O.'s clerk.*

Dated initials of Audit clerk. *Engineer, D. L. B.*

.....

Date signature of the S. D. O. .....

Detail of the measurement of work done by the labour employed as per this Nominal Muster Roll in cases in which the work is susceptible of measurement.

Description of Work. (Each distinct item of work, grouped by sanctioned sub-heads where necessary.)	Quantity.	Cost.	Rate.	Per.

Measurements taken on by me and recorded on pages of M. B. No.

Overseer.....

Checked with the M. B. and found correct.
Ledger page.....

Dated initials of S. D. O.'s clerk.

.....

Checkmeasured by me on and countersigned.

Dated.....*S. D. O*.....

LOCAL BOARDS ACCOUNT FORM No. 34.

(*See* Rule 149.)

DISTRICT LOCAL BOARD.

First and Final Bill.

Sub-Division *Section*

Name of Work

Name and address of Contractor or Piece worker

Reference to agreement or authority

If paid from Imprest.

Received Rupees ( ) (If payee is illiterate or cannot acknowledge in his own hand.)

Paid in my presence Rupees ( )

Signature or thumb impression of contractor or piece worker. *Signature of witness.*

Paid from my imprest Rupees ( )

on

Signature and Designation of Officer making payment.

If to be paid by cheque.

Received the amount of the bill.

Signature or thumb impression of payee. *Signature of witness if payee is illiterate.*

Pay Rupees ( )

Dated *Accountant, D. L. B.* *Chief Officer, D. L. B.*

Paid by Cheque No. dated by debit to

V. No. Ledger page

Name of Work

Items of work or supplies (grouped under sub-heads of sub-works of estimates).	Quantity.	Rate.	Per.	Amount.	Remarks.
			Total	...	
(In words) Rupees					

The measurements were taken by Mr. on and recorded on pages of M. B. No.

Dated signature of Overseer.

Dated signature of contractor or piece worker in token of acceptance of the bill.

Checked with the M. B. and found correct.

Ledger page.

Dated initials of S. D. O's clerk.

Measurements checked by me on and bill approved.

Dated signature of the S. D. O.

Checked.

Dated initials of Audit Clerk.

Countersigned.

Engineer, D. L. B.

LOCAL BOARDS ACCOUNT FORM No. 35.

(*See* Rule 149.)

DISTRICT LOCAL BOARD.

Running Account Bill.

Intermediate. Final.

Section

Sub-Division

Name of Work

Name and address of Contractor or Pieceworker

Reference to Agreement or Authority

Checked with the M. B. and found correct.

Ledger page

Measurements checked by me and bill on approved for Rs.

Dated Initials of S. D. O's Clerk, / Overseer. Dated Signature of the S. D. O. / Overseer.

Checked

Dated Initials of Audit Clerk.

Countersigned.

Engineer, D. L. B.

Received the amount of the bill.

Dated Signature or Thumb impression of payee.

Dated Signature of witness if payee is illiterate.

Pay Rupees ( )

Dated

Accountant, D. L. B.

Chief Officer, D. L. B.

Paid by Cheque No. dated by debit to

V. No. Ledger page

Name of Work

Items of work or supplies (grouped under sub-heads of estimates).	Quantity up to date.	Rate.	Per.	Amount up to date.	Amount since previous bill.	Remarks.
Total value of work done ..						
Deduct at per cent. as per agreement ..						
Amount payable up to date ..						
Deduct previous payments made ..						
Net amount now to be paid						In words —Rs.

The measurements were taken by Mr. on and recorded on pages of M. B. No.

Dated Signature of Overseer.

Dated Signature of Contractor or Pieceworker in token of acceptance of the bill.

LOCAL BOARDS ACCOUNT FORM No. 36.

(*See* Rule 149.)

DISTRICT LOCAL BOARD.

Pay Bill and Acquittance Roll of Mile Coolies.

C. R. to *Road* *for the month of*

Name of coolie.	Miles in charge.	Period days.	Rate.	Amount due.	Fines etc.	Balance paid.	Signature or thumb-impression
					Total ..		Rupees

Certified that the above coolies were on duty during the period shown against each and attended to maintenance work.

Karkun. Dated Overseer, D. L. B.

Checked. Sub-Dnl. Clerk.	Approved for Rs. S. D. O.	Checked. Countersigned. Clerk to Engr. Engineer.

Paid from my imprest Rs. on

Dated Signature and Designation.

Pay Rupees

Accountant. Dated Chief Officer.

Paid by Cheque No. Dated

by debit to

V. No. Ledger page

LOCAL BOARDS ACCOUNT FORM No. 37.

(*See* Rule 149.)

DISTRICT LOCAL BOARD.

Pay Bill and Acquittance Roll of Establishment charged to work.

Name of work

Authority

Name of incumbent.	Period.	Rate of pay.	Amount due.	Fines, etc.	Net amount payable.
				In words	

Certified that the above person was on duty during the above period on the work shown above.

Dated Overseer, D. L. B.

Checked.	Approved for Rs.	Checked.	Countersigned.
Sub-Dnl. Clerk.	S. D. O.	Clerk.	Engineer.

Paid from my imprest Rs.	Received Rs.
Dated Signature and Designation.	Dated Signature of Payee.

Pay Rupees
Accountant. Dated Chief Officer.

Paid by Cheque No. Dated
by debit to

V. No. Ledger page

LOCAL BOARDS ACCOUNT FORM No. 38.

(*See* Rule 62.)

DISTRICT

Acquittance Roll of Establishment of the for 19 in which Month the Salaries of the Establishment were drawn.

Name	Amount.	Month.	Signature and Stamp for each payment exceeding Rs. 20.
	Rs. a. p.		
Total ...			

LOCAL BOARDS ACCOUNT FORM No. 39.

[*See* Rule 152 (*b*)]

DISTRICT LOCAL BOARD.

Hand Receipt.

Bill No.

Name of work
Item in the estimate
Received from *the sum*
of Rupees ( )
on account of

Dated Signature of witness if the Payee is illiterate.

Dated Signature or Thumb impression of the Payee.

Paid from my imprest Rs.
on

Dated Signature and Designation.

Checked. Approved for Rs.

S. D. O.'s Clerk S. D. O.

Checked. Countersigned.

Clerk. Engineer.

PAY ORDER.

Pay Rupees ( )

Accountant, D. L. B. *Chief Officer, D. L. B.*

Dated.

Paid by Cheque No. *Dated*
by debit to
V. No. Ledger page

LOCAL BOARDS ACCOUNT FORM No. 40.

(*See* Rule 148.)

DISTRICT LOCAL BOARD *Bill No.*

Requisition and Bill for Materials purchased locally

Name of work

Item in the estimate

Name of articles.	Rate.	Per.	Quantity.		Amount.
			Proposed.	Actually bought.	

No. *Dated* Submitted to the S. D. O. for approval and return. *Overseer*	TOTAL Rs. Articles received on and taken to account. *Overseer*
No. *Dated* Return approved as corrected. *S. D. O.*	
Checked. Approved for Rs. *S. D. O's Clerk* *S. D. O.*	Checked. Countersigned. *Clerk.* *Engineer.*
Paid from my imprest Rs.	Received Rs.
Dated Signature and Designation.	*Dated Signature of Supplier.*

ORDER.

Pay Rupees

Accountant. *Dated* *Chief Officer.*

Paid by Cheque No. Dated
by debit to
V. No. Ledger page

LOCAL BOARDS ACCOUNT FORM No. 41.

(*See* Rule 127.)

DISTRICT LOCAL BOARD.

List of Sanctioned Rates.

Sub-Division Section

Name of Work

Serial No.	Description of work.	Approximate quantity.	Unit per	Rates.			Remarks.
				Sanctioned estimate.	Sanctioned last.	Now proposed.	
1	2	3	4	5	6	7	8

Note.—The exact wording of the estimate or schedule of rate to be entered in Column 2.

No. OF 19 .

Camp , dated 19 .

Submitted to the Engineer, D. L. B., for favour of sanction.

Sub-Divisional Officer,
Sub-Division.

Checked and found correct.

Draftsman.

No. OF 19 .

D. L. B., Engineer's Office,
dated 19 .

Returned sanctioned.

Engineer, D. L. B.

LOCAL BOARDS ACCOUNT FORM No. 42.

(*See* Rule 107.)

DISTRICT LOCAL BOARD.

Section Sub-Division

Dated

Fund Head

Major Head

Original or repairs

Estimate framed by

of the probable expense that will be incurred in

Call or authority Rs.

Approved for Rs.

Engineer, D. L. B., *President D. L. B.*

GENERAL DESCRIPTION.

ABSTRACT.

Serial No. of Item.	Quantity	Item.	Rate.	Per	Amount.
			Rs. a. p.		Rs.

LOCAL BOARDS ACCOUNT FORM No. 43.

(*See* Rule 107.)

No. of 19 .

Division.

PUBLIC WORKS DEPARTMENT:

Dated 19

Fund :— State. / Local.

Major Head :—41. Civil Works.

Departmental Head :—Repairs.

(Service Head) :—2. Communications.

(Sub-Head) :— 1. Metalled Roads. 2. Unmetalled Roads. / A. Bridged and drained throughout. B. Partially bridged and drained.

Estimate framed in the Office of the Executive Engineer.

Division, of the probable expense that will be incurred in executing Current Repairs

to during the year 19 –19 .

Rs.

(Call or Authority) :— Government Civil Works / Local Fund Works Budget for the year 19 –19 .

Length of Road miles :—

Average cost of repairs per mile—Rs.....

Do. of maintenance—Rs..... } *Total*

GENERAL DESCRIPTION.

It is proposed to $\frac{\text{remetal}}{\text{remuram}}$ miles of the Road and to collect reserve $\frac{\text{metal}}{\text{muram}}$ in miles. The thickness of $\frac{\text{metal}}{\text{muram}}$ to be laid will be inches for a width of feet. The side-widths outside the $\frac{\text{metalled}}{\text{muramed}}$ portion will be made up with earth during the rains, a thick top coating of soft muram or sand being used. The formation of the road will be brought up to its original width which is generally feet and the convexity will be carefully preserved and restored where necessary. Reserve $\frac{\text{metal}}{\text{muram}}$ will be collected for miles.

In miles which are not to be $\frac{\text{remetalled}}{\text{remuramed}}$ all ruts and hollows will be properly filled up with new $\frac{\text{metal}}{\text{muram}}$ and thoroughly watered and rammed in or rolled over according to requirements. Catch-water drains, side gutters, drainage works, mile, furlong, boundary and guard stones, etc., will be properly attended to and the surface of the road will be maintained throughout the year as near its original section as possible and kept smooth and free from ruts and hollows. The estimate also includes repairs to Rest-houses, Store-houses, etc.

Specification.

Metal	To be as described in M. S. pp.	Rate Abstract No.
Metal	Do.	Do.
Muram	Do.	Do.
Muram	Do.	Do.
Sand	Do.	Do.
Rolling	Do.	Do.
Rolling	Do.	Do.

All other items to be executed according to Marryat's Specifications or Standing Orders.

ABSTRACT.

Quantity.	Items.	Rate. Rs.	a.	p.	Per.	Amount. Rs.	Dec.
	A—Surface Repairs.						
C. ft.	Collecting metal ...				100		
,,	Do. do. ...				100		
,,	Do. muram ...				100		
,,	Do. do. ...				100		
,,	Do. sand ...				100		
,,	Carting metal to roadside average lead miles...				100		
,,	Do. metal do. miles...				100		
,,	Carting muram to roadside average lead miles...				100		
,,	Do. muram do. miles ...				100		
,,	Carting sand to roadside average lead miles ...				100		
S. ft.	Picking road surface ...				100		
C. ft.	Spreading metal ...				100		
,,	Do. do. ...				100		
,,	Do. muram ...				100		
,,	Do. do. ...				100		
,,	Do. sand ...				100		
Ms.	Consolidating metal by ...				Each.		
,,	Do. do. by ...				,,		
,,	Do. do. by ...				,,		
,,	Do. muram by ...				,,		
,,	Do. do. by ...				,,		
,,	Do. do. by ...				,,		
,,	Do. old surface by ...				,,		
,,	Repairs to side-widths including top dressing of muram or sand...				,,		
,,	Filling in ruts and hollows including consolidation by ...				,,		
	Total ...Rs.						

ABSTRACT—*contd.*

Quantity.	Items.	Rate. Rs.	a.	p.	Per.	Amount. Rs.	Dec.
	Reserve Collection.						
C. ft.	Collecting metal ...				100		
,,	Do. do. ...				100		
,,	Do. muram ...				100		
,,	Do. do. ...				100		
,,	Carting metal to roadside average lead miles ...				100		
,,	Do. metal do. miles ...				100		
,,	Do. muram do. miles ...				100		
,,	Do. muram do. miles ...				100		
	Total ... Rs.						
	Total A—Repairs Rupees.						
	B—Maintenance.						
Ms.	Maintenance ...				Each		
,,	Filling in ruts and hollows, including consolidation by ramming ...				,,		
,,	Clearing catch-water drains ...				,,		
,,	Clearing roadside gutters ...				,,		
,,	Clearing and levelling berms ...				,,		
,,	Lopping of overhanging branches of trees and removing fallen trees				,,		
,,	Putting up and removing water tables ...				,,		

ABSTRACT—*concld.*

Quantity.	Items.	Rate. Rs.	Rate. a.	Rate. ps	Per.	Amount. Rs.	Amount. Dec.
	B—Maintenance—contd.						
Nos.	Repairs to drains and culverts, including numbering them ...				Each		
,,	Repairs to bridges do. ...				,,		
,,	Do. to causeways do.				,,		
,,	Do. to small nala approaches ...				,,		
,,	Do. to large do. do. ...				,,		
,,	Do. to dips or Irish bridges				,,		
,,	Do. to Rest-houses ...				,,		
,,	Do. to Store-houses or rent of Storehouses ...				,,		
,,	Do. to sign posts ...				,,		
,,	Painting do. ...				,,		
,,	Do. mile stones ...				,,		
,,	Do. furlong stones				,,		
,,	Painting / Whitewashing boundary stones				,,		
,,	Whitewashing guard stones				,,		
Ft.	Repairs to kerbing ...				100		
,,	D o.stone pitching ...				100		
Nos.	Renewing and refixing guard stones ...				Each		
,,	Do. do. boundary stones				,,		
	Do. do. do. ...				,,		
,,	Total B—Maintenance ...						
	Add A—Repairs.						
	Grand Total ... Rs.						

Year.	Estimate.	Allotment.	Expenditure.

Sub-Divisional Officer,
Sub-Division.

Average Rupees...

Executive Engineer,
Division.

Survey Report to accompany Estimate for Current Repairs to the for the Year 19 -19 .

A.—SURFACE

Surfacing material for

No. of mile.	Quantity required in C.ft.				Balance at roadside, C.ft.	Balance at quarry, C.ft.
	L.	B.	D.	Quantity.		

REPAIRS.

central portion.

To be collected on quarry, C.ft.		To be carted, C.ft.		Lead in miles,
Kind of material.		Kind of material.		
				Average lead miles.

Survey Report to accompany Estimate for Current Repairs to the for the Year 19 -19 —contd.

A—SURFACE

No. of mile.	Surfacing Material for side widths.										
	Quantity required in C.ft.				Balance at roadside, C.ft.	Balance at quarry C.ft.	To be collected, C.ft.		To be carted, C.ft.		Lead in miles.
							Kind of material.		Kind of material.		
	L.	B.	D.	Quantity.							
											Average lead miles.

REPAIRS—*contd.*

No. of mile.	Blindage Material.										
	Quantity required in C.ft.				Balance at roadside, C.ft.	Balance at quarry, C.ft.	To be collected.		To be carted.		Lead in miles.
							Kind of material.		Kind of material.		
	L.	B.	D.	Quantity.							
											Average lead miles.

Survey Report to accompany Estimate for Current Repairs to the for the Year 19 -19 —contd.

A—SURFACE REPAIRS—*contd.*

No. of mile.	Picking Road surface. Same as metal collection excluding depth, S. ft.	Spreading metal.	Spreading hard murum, C. ft.	Spreading soft murum, C. ft.	Spreading sand, C. ft.	Consolidating metal miles by			Rolling on murum miles by			Consolidating old surface by	Repairs to side widths including top-dressing of murum or sand.	Filling in ruts and hollows including consolidating by					
						Kind of material.			Kind of material.										

A—SURFACE REPAIRS—*concld.* | B—MAINTENANCE.

No. of mile.	Reserve collection. Metal. Kind of material.		Murum. Kind of material.		To be carted, C. ft. Kind of material.				Lead in miles.			Miles maintenance.	Do. filling ruts and hollows including consolidation by ramming.	Clearing, catch-water drains, miles.	Do. side gutters, miles.	Clearing and levelling side berms.	Lopping of overhanging branches of trees and removing fallen trees.

Survey Report to accompany Estimate for Current Repairs to the for the Year 19 -19 —concld.

B—MAINTENANCE—*contd.*

No. of mile.	Putting and removing water tables.	Repairs to drains and culverts including numbering them.	Do. to bridges do.	Do. to causeways do.	Do. to small nalla approaches.	Do. to large do. do.	Do. to dips or Irish bridges.	Do. to Rest-houses.	Do. to Store-houses or rent of Store-houses.	Do. to sign posts.	Painting do.	Do. mile stones.	Do. furlong do.

B—MAINTENANCE—*contd.*

No. of mile.	Painting / Whitewashing boundary stones.	Whitewashing guard stones.	Repairs to kerbing.	Do. to stone pitching.	Renewing and reflexing guard stones.	Do. do. boundary do.							

Sub-Divisional Officer, Sub-Division. Executive Engineer, Division.

LOCAL BOARDS ACCOUNT FORM No. 44.

(*See* Rule 115.)

DISTRICT LOCAL BOARD.

Sub-Dn. Section D. L. B. or T. L. B.

Deviation Statement No. for

ITEMS PROPOSED TO BE OMITTED.

S. No.	Description of Items.	Quantity.	Rate.	Per	Amount.			Remarks.
					Rs.	a.	p.	
				Total ..				

ITEMS PROPOSED TO BE EXECUTED.

S. No.	Description of Items.	Quantity.	Rate.	Per	Amount.			Remarks.
					Rs.	a.	p.	
				Total ..				

Dated *Approved.*

Overseer *President, T. L. B.*

For T. L. B. Original and all D. L. B. Works.

No. Dated

Submitted to the S. D. O., D. L. B. in triplicate.

Overseer

No. Dated

Checked and submitted to the Engineer, D. L. B., for sanction.

S.D.O.,D.L.B.,

Checked with the estimate, schedule of rates, etc. and found correct.

Draftsman, D.L.B.,

No. of D. L. B., Engineer's Office,

Dated

Returned approved.

Engineer, D.L.B.,

LOCAL BOARDS ACCOUNT FORM No. 45.

(*See* Rule 129.)

District Local Board

Piece Works Tender.

To

The District Local Board

I hereby agree, subject to the conditions mentioned below, to undertake the several items of works specified below for per cent. less than the estimated rates shown against each.

Serial No. of item in the estimate.	Name of work and description of item given in the estimate.	Per unit.	Estimated rate.		
			Rs.	a.	p.

1. I shall execute the works very satisfactorily and expeditiously by using the best materials. The materials used and the work done will be subject to inspection and approval by the Engineer, District Local Board, and his decision as to the progress and execution of the work; the measurements and the materials used will be final.

2. I shall claim no payment for materials or work not approved by him. That Officer shall have every authority to remove the rejected materials and to get the work redone and to deduct from my bill or bills any expenditure incurred in this connection.

3. The *President, District Local Board, / **Standing Committee, District Local Board, / ***District Local Board shall have power to cancel this tender at any time.

Dated

Signature of Piece worker

Address

Witness

Recommended.

Sub-Divisional Officer

Accepted.

*President, District Local Board,

**Standing Committee, District Local Board,

***District Local Board,

---

* To be retained when the amount or value of the contract does not exceed Rs. 500.

**To be retained when the amount or value of contract exceeds Rs. 500 but does not exceed the amount, power to enter into contracts up to which has been delegated to the Standing Committee under the proviso to rule 1 of the rules published in G. N., G. D., No. 4456, dated the 24th January 1924.

***To be retained in any other case.

LOCAL BOARDS ACCOUNT FORM No. 46.

(*See* Rule 124.)

DISTRICT LOCAL BOARD,

Daily Report of Labour.

Name of Work Date

Labour at Item of work on which employed.								Amount.			Approximate quantity of work done.
								Rs.	a.	p.	
Total ...											
Amount B. F. from Previous Reports ...											Rd. on. .....
Progressive Totals ...											

Dated Signature of Karkun or Maistry. *Dated initials of Overseer.* *Initials of S. D. O. or Clerk.*

LOCAL BOARDS ACCOUNT FORM No. 47.

(*See* Rule 158.)

DISTRICT LOCAL BOARD.

Register of Road side materials.

Name of Road Kind of material

Mile No.	MONTHS.	April.			May.			June.		
	Opening Balance on 1st April.	Receipts.	Issues.	Balance.	Receipts.	Issues.	Balance.	Receipts.	Issues.	Balance.

July.			August.			September.			REMARKS.
Receipts	Issues.	Balance.	Receipts.	Issues.	Balance.	Receipts.	Issues.	Closing Balance on 30th September.	

Mile No.	MONTHS.	October.			November.			December.		
	Opening Balance on 1st October.	Receipts.	Issues.	Balance.	Receipts.	Issues.	Balance.	Receipts.	Issues.	Balance.

January.			February.			March.			REMARKS.
Receipts.	Issues.	Balance.	Receipts.	Issues.	Balance.	Receipts.	Issues.	Closing Balance on 31st March.	

LOCAL BOARDS ACCOUNT FORM No. 48.

(*See* Rule 158.)

Register of Tools and Plants and Surplus or Stock-materials.

Name of article.

Month and Date.	Voucher or Indent No.	Description.	Receipts.	Issues.	Balance.	Remarks.
		Opening balance ..				

LOCAL BOARDS ACCOUNT FORM No. 49.

(*See* Rule 282.)

Register of Roads in charge of $\frac{\textit{District}}{\textit{Taluka}}$ *Local Board.*

Serial No.	Name of Road.	From Village.	To Village.	Length.	Breadth.

Class of road.	Date of completion.	Average cost per mile when constructed.	Mileage cost of repairs.	Remarks.

LOCAL BOARDS ACCOUNT FORM No. 50.

(*See* Rule 282.)

Register of Immoveable Property other than roads in charge of $\frac{\textit{District}}{\textit{Taluka}}$ *Local Board.*

Serial No.	Village.	Description of building or work.	Date of completion or purchase.	How occupied.

Nature of building.			External Dimensions.		Cost.	Notes of subsequent repairs, etc.
Walls.	Roofs.	Floors.	Length.	Breadth.		

LOCAL BOARDS ACCOUNT FORM No. 51.

(*See* Rule 283.)

Register of Securities furnished by the District Local Board servants.

Serial No.	Name of incumbent.	Amount of security.	Duties performed.
1	2	3	4

Whether furnished in cash or Government paper.	Names of sureties if any with their places of residences.	Notes regarding enquiries about solvency of sureties.	Remarks.
5	6	7	8

LOCAL BOARDS ACCOUNT FORM No. 52.

(*See* Rule 285.)

Cattle Pound Register.

Date of receipt.	Name of pound.	Fine.	Unclaimed sale proceeds.	Total.

Date of credit to Treasury.	Amount.			Remarks.
	Rs.	a.	p.	

LOCAL BOARDS ACCOUNT FORM No. 53.

(Rule 284).

Counterfoil of Receipt for impounded Cattle.

Book No.

Name of Pound

No.

Number in the Pound Register. 1	Date and hour of admission. 2	Name and address of impounder. 3	Number and description of cattle admitted. 4	Name and address of owner if known. 5	Signature of Poundkeeper. 6	Date. 7

Receipt for impounded Cattle.

Book No.

Name of Pound

No.

Number in the Pound Register. 1	Date and hour of admission. 2	Name and address of impounder. 3	Number and description of cattle admitted. 4	Name and address of owner if known. 5	Signature of Poundkeeper. 6	Date. 7

LOCAL BOARDS ACCOUNT FORM 54.

(Rule 284.)

Counterfoil of Release Pass for Cattle.

Book No.

Name of Pound

No.

Number in Pound Register.	Date and hour of release.	Number and description of cattle.	Name and address of person releasing the cattle.	Particulars of amounts released.			Signature of Pound-keeper.	Date.
				Amount of fines.	Amount of feeding charges.	Total.		
1	2	3	4	5	6	7	8	9
				Rs. a. p.	Rs. a. p.	Rs. a. p.		

Pound Release Pass and Receipt.

Book No.

Name of Pound

No.

Number in Pound Register.	Date and hour of release.	Number and description of cattle.	Name and address of person releasing the cattle.	Particulars of amounts released.			Signature of Pound-keeper.	Date.
				Amount of fines.	Amount of feeding charges.	Total.		
1	2	3	4	5	6	7	8	9
				Rs. a. p.	Rs. a. p.	Rs. a. p.		

LOCAL BOARDS ACCOUNT FORM No. 55.

(Rule 284.)

Register Book of cases of stray cattle received by the Station Officer for disposal, under Section 14 of Act I of 1871, at

Serial No.	Name of the pound from which received.	Register number of the cattle pound, name of the seizer, the place where they were seized, the date and hour when they were impounded.	Description of cattle.					Date of issuing notice.
			Kind.	Age.	Value.	Height.	Special marks and colour.	
1	2	3	4	5	6	7	8	9

Signature or mark of the person receiving cattle after establishing his claim.	Name of the purchaser and his signature in token of his having received the cattle.	Date of sale and amount.	At what rate and for what period money was paid to the pound-keeper on account of feeding charges, etc., and signature of recipient.	Amount of penalty levied.	Surplus sale proceeds to be refunded to the owner.
10	11	12	13	14	15

LOCAL BOARDS ACCOUNT FORM NO. 56.

(Rule 284).

Form of Register to be kept under Section 8 of Act I of 1871.

Serial No.	Name of the seizer, date of receipt (hour, month and year).	Description of Animal.					Name of the owner, and his place of residence, if known.
		Kind.	Age.	Value	Height.	Special marks and colour.	
1	2	3	4	5	6	7	8

Date of return of cattle to the owner and the signature of recipient.	Fine.	Amount of feeding charges, etc., and signature of the person receiving the same.	Date of report to the Station Officer under Section 14.	Date of sending cattle for sale.	Signature of the pound-keeper.
9	10	11	12	13	14

Note.—The pound-keeper must sign in column 14 every day's entry made in this Register.

LOCAL BOARDS ACCOUNT FORM No. 57.
(Rule 284.)

Form of Report to be sent by the pound-keeper under Section 14 of Act I of 1871.

Serial No.	Register number, name of the seizer, the place where the animals were seized, and the date and hour when impounded.	Description of cattle.	
		Kind.	Age.

Description of cattle—*contd.*			Amount of feeding charges incurred by the pound-keeper.	Remarks.
Value.	Height.	Special marks and colour.		

LOCAL BOARDS ACCOUNT FORM No. 58.

(Rule 284.)

Day Book of Cattle-Pound Receipts at Taluka for the year 19

Dr.

Date.		Detail.	Amount.		
Day.	Month.				
		To fine on account of cattle, registered No.			
		Feed of do. ..			
		Balance ..			

Cr.

Date.		Detail.	Amount.		
Day.	Month.				
		By payment to self on account of feeding charges of cattle, registered No.			
		On repayment of advance (as the case may be).			
		Balance ..			

Notes.—1. All collections made in the shape of fines, etc., and all charges incurred in feeding the cattle shall be carefully entered by the pound-keeper each day in this form as the transactions occur.

2. The pound-keeper will be held personally responsible for omissions or mistakes in the accounts.

LOCAL BOARDS ACCOUNT FORM No. 59.

(Rule 284.)

Form of Remittance Report to be made by the Pound-Keeper.

Remittance Report of the Cattle-pound at Taluka.

Date.		Register No.	Amount of fine.
Day.	Month.		

Signature of Pound-keeper.

N.B.—This report should be prepared in duplicate.

The Taluka Treasury Officer should return one copy, endorsing on it the receipt of the amount, and should retain the other copy in his office for record.

APPENDIX A.

(*See* Rule 165.)

Rules regarding the Destruction of Local Board Account Records.

Class I.—To be retained permanently—

(1) General Day Book.
(2) Provident Fund Ledger.
(3) Register of Immovable Property.
(4) Annual Accounts.
(5) Register of Investments.
(6) Security Deposit Register.
(7) Such other records as the Board may decide to be of permanent interest.

Class II.—Not to be destroyed until ten years after conclusion of audit—

(1) Vernacular registers of which there are English counterparts or abstracts of which are retained permanently.
(2) Assessment lists.
(3) Registers in the nature of demand and collection registers.
(4) Scale Register.
(5) Cash Books other than the general cash book.
(6) Register of moveable property.
(7) Register of permanent advances.

Class III.—Not to be destroyed until five years after conclusion of audit—

(1) Subsidiary cash register.
(2) Classified abstracts.
(3) Register of works.
(4) Measurement book.
(5) Register of advances or deposits.
(6) Work files.

Class IV.—Not to be destroyed until three years after conclusion of audit—

All records other than those mentioned in Classes I to III.

G. N., G. D., No. S. 128, dated 17th August 1936.

S. 133 (d) Bombay Local Boards Travelling Allowances Rules, 1936.

Amended by G.N., G.D., No. 21010/33, dated 26th March 1938.
Amended by G.N., G.D., No. S. 128, dated 8th January 1940.
Amended by G.N., G.D., No. S. 128, dated 12th March 1940.
Amended by G.N., G.D., No. S. 128, dated 4th April 1941.
Amended by G.N., G.D., No. S. 128, dated 1st August 1942.
Amended by G.N., G.D., No. S. 128, dated 6th May 1943.
Amended by G.N., G.D., No. S. 128, dated 15th April 1944.
Amended by G.N., G.D., No. S. 128, dated 18th April 1944.
Amended by G.N., G.D., No. 128 (4), dated 9th August 1945.
Amended by G.N., H. & L.G.D. No. 128 (4), dated 11th August 1948.

In exercise of the powers conferred by clause (*d*) of section 133 of the Bombay Local Boards Act, 1923 (Bom. VI of 1923), and in supersession of rule 60-A of the rules published in Government Notification in the Revenue Department, No. 78, dated the 7th January 1885, the Government of Bombay is pleased to make the following rules regarding the payment of travelling allowances to officials and members of local Boards :—

1. These rules may be called the Bombay Local Boards Travelling Allowances Rules, 1936.

2. In these Rules—

(*i*) The " Act " means the Bombay Local Boards Act, 1923.

(*ii*) " Board " means the taluka local board or district local board, as the case may be.

(*iii*) " Official " means a President or a vice-president of a local board or a chairman of a committee of a local board.

(*iv*) " Member " means a member of a local board.

3. An official or a member shall, subject to the provisions hereinafter following, be entitled to travelling allowance for a journey performed by him to attend a meeting of a local board or a meeting of the Standing Committee, Public Health Committee, or of any other committee appointed under section 38 of the Act, including a Dispensary Committee, in accordance with the travelling allowance rules in the Bombay Civil Services Rules :

Provided that the travelling allowance, other than the daily allowance, shall be payable at such rates, not exceeding those laid down in the Bombay Civil Services Rules, as may be fixed by the Board every year :

Provided further that an official or a member classed in the first and second class under rule 8 shall be entitled to a daily allowance of not less than Rs. 6 and 3 respectively and not more than Rs. 8 as. 8 and Rs. 4 as. 4 respectively.

4. Travelling allowance may be allowed to an official or a member for a journey undertaken by him in the interests of the Board, such as the journey undertaken—

(*a*) for attending any public reception, ceremony, entertainment or exhibition in respect of which the previous concurrence of the Collector to incur expenditure has been obtained under clause (*o*) of section 50 of the Act, or

(*b*) for attending, as a delegate of the Board, any district, divisional or provincial conference held under the auspices of Local Self-Government Institute, Bombay, or

(*c*) under the authority of the President, for the performance of a duty imposed by the Bombay Village Panchayats Act, 1933, or

(*d*) for attending a meeting of a committee appointed by the Board other than those referred to in rule 3, or

(*e*) for attending a meeting of a committee which is appointed by the Government of Bombay and of which he is appointed a member as a representative of the Board.

5. An official or a member (other than a President or a Chairman of a Works Committee) shall not be entitled to any travelling allowance for a journey undertaken for inspection of a work of a local board or of a village panchayat.

6. Travelling allowance shall not be admissible for a journey performed with a radius of five miles from the headquarter station, other than by rail or, by a public conveyance as defined in the Bombay Civil Services Rules.

7. Except with the previous sanction of the Commissioner, no travelling allowance shall be admissible to an official or a member for a journey undertaken by him outside the jurisdiction of the Board :

Provided that the previous sanction of the Commissioner shall not be required when such journey is undertaken for the purpose of attending, as a delegate of the Board, any district, divisional or provincial conference held under the auspices of the Local Self-Government Institute, Bombay.

8. For the purpose of travelling allowance, officials and members shall be divided into following clauses :—

(*a*) President, District Local Board ; Vice-President, District Local Board, when such Vice-President is acting for the President	Class I.
(*b*) Member, District Local Board ; President, Taluka Local Board ; Vice-President, Taluka Local Board, Chairman of a Committee of District Local Board, and in respect of a journey undertaken for the performance of the duties of a Taluka Local Board Committee or for attending a meeting of such Committee, Chairman of a Taluka Local Board Committee	Class II.
(*c*) Member, Taluka Local Board	Class III.

9. (1) For the purposes of these rules, the headquarter station of an official or a member shall be his usual place of residence :

Provided that when such place of residence is outside the area under the jurisdiction of the local board of which he is a member, a place within the constituency which he represents shall be fixed by the Board as his head quarter station.

(2) On election or nomination, every member shall notify his usual place of residence to the Board, and any subsequent change shall be intimated within one week of such change.

(3) Any member may challenge the claim of any other member to having a particular place recognised as his headquarter station. When a dispute arises the Board shall hear both the parties and the decision of the Board in the matter shall be final and conclusive.

(4) An official or a member shall claim travelling allowance from his headquarter station recognised by the Board or from the place where he happens to be prior to undertaking the journey whichever may be less.

10. (1) Subject to the special orders of the State Government with respect to any particular Board, the maximum amount of travelling allowance payable in any financial year to an official or a member other than a President, shall be as follows :

	Rs.
Chairman of a Committee (other than a Works Committee) of a District Local Board	267
Chairman of a Works Committee of a District Local Board ...	333
Member of a District Local Board not being the President or not holding any of the above offices	200

Provided that the amount of travelling allowance payable for attending conferences organised by the Local Self-Government Institute, Bombay or meetings of the Landing and Wharfage Fees Fund Committee shall not be included within the aforesaid maxima.

(2) In any year during the course of which the term of a Board is due to expire or there is a change in the officials or members of a Board owing to resignation, disqualification or any other reason, the maximum amount of travelling allowance payable to the outgoing and incoming officials or members shall be fixed in proportion to the period of office during the year of the officials or members concerned, as the case may be.

11. (1) A claim for travelling allowance shall be admitted for payment in the financial year during which the journey, in respect of which travelling allowance is claimed, is made :

Provided that such claim is preferred within three months of its becoming due :

Provided further that a claim for travelling allowance for a journey performed in the month of February or March may, if preferred before the end of the following April, be admitted for payment in the following financial year :

Provided also that the amount of travelling allowance drawn by an official or a member for journeys performed by him in any financial year shall not exceed the maximum limit for that year irrespective of the year in which the amount or part of it is drawn.

Explanation.—The period of three months prescribed for submission of travelling allowance bills shall be computed from the date of return of the member to his headquarter on completion of the journey.

(2) A claim preferred within the three months of its becoming due but not paid during the same financial year owing to protracted correspondence or any other reason may be paid during the next financial year or thereafter provided the prescribed maximum limit for the year to which the claim relates is not exceeded.

12. (1) (*a*) Every District Local Board shall in each financial year fix by a special resolution the maximum amount of travelling allowance payable to its President in the said year.

(*b*) The amount so fixed shall not exceed Rs. 2,000.

(*c*) The amount fixed under clause (*a*) may from time to time be varied by a District Local Board by a special resolution :

Provided that the amount so varied shall not exceed the limits specified in clause (*b*) and the special resolution varying the amount shall not affect the expenditure already incurred.

(*d*) Every Taluka Local Board shall in like manner fix in each financial year the maximum amount of travelling allowance payable to its President not exceeding Rs. 240.

(2) Such travelling allowance shall, subject to the provisions of rule 11, be drawn—

(*i*) either in the form of a permanent monthly travelling allowance not exceeding one-twelfth of the maximum amount fixed under sub-rule (1) as the District or the Taluka Local Board, as the case may be, may determine, or

(*ii*) subject to the provisions of rule 3 in accordance with the travelling allowance rules in the Bombay Civil Services Rules for the time being in force.

(3) When such travelling allowance is drawn in the form of a permanent travelling allowance, the President shall maintain a diary in the form prescribed below. Such diary shall be kept on the records of the Board and shall be available for inspection to the auditor appointed under section 92 of the Act or acting under the Bombay Local Fund Audit Act, 1930.

Form of Diary.

Diary of President, District/Taluka Local Board of for the month of 19 .

Date.	Hours of journey.	From place.	To place.	Distance travelled.	Nature or kind of conveyance used.	Purpose of journey.	Details of work done together with remarks in case the purpose of the journey is inspection of works.

(4) The provisions of this rule shall, *mutatis mutandis*, apply to the travelling allowance payable to a Vice-President when such Vice-President acts for the President during his absence on leave.

13. (1) No person who is a member of two or more different boards shall be entitled to draw travelling allowance beyond the highest maximum amount admissible to him as a member of any one of such boards.

(2) No person who holds one or more offices on one and the same board or two offices on two different boards shall be entitled to draw travelling allowance beyond the highest maximum amount admissible for any one of such offices.

(3) A person who holds three or more offices on two or more different boards shall be entitled to draw three-fifths of the highest amount of travelling allowance admissible to him as a member of any one of such boards in addition to the highest maximum amount admissible to him for any one of such offices.

Explanation —For the purpose of this rule " office " does not include mere membership of a Board. When a person is on two or more different Boards the travelling allowance payable to him in the year from the funds of any one of such Board shall not exceed the maximum amount which is admissible to him in a year as a member or official of that Boa d.

14. All restrictions imposed on and concessions allowed to Government servants in general in respect of travelling allowances shall be applicable in the case of official and members.

15. The duration of time spent in actual travelling by a member from his place of residence to attend any meeting connected with the work of the Board shall not, except with the sanction of the Commissioner, exceed the period allowed by rule 85 of the Bombay Civil Services Rules to officers on transfer for the different kinds of conveyances noted herein.

16. The President of a District Local Board shall be the controlling officer and he shall exercise the powers of a controlling officer with reference to the orders of the State Government issued from time to time.

17. *Deleted.*

18. For the purposes of these rules officials and members shall be considered as non-ministerial officers.

G. N., E. D., No. 5257-II, dated 8th May 1933 (B. G., Pt. I-A, p. 118.) **S. 133 (e).**

In exercise of the powers conferred by clause (*e*) of section 133 of the Bombay Local Boards Act, 1923 (Bom. VI of 1923), the Government of Bombay is pleased to make the following rules, prescribing the extent of the independent authority of the district and taluka local boards in the districts in which the district local boards have not constituted school boards under the Bombay Primary Education Act, 1923 (Bom. IV of 1923), in respect of education and their relations generally with the Government Educational Department and with each other in educational matters :—

1. *All public primary schools to be maintained by local boards, and to be called " Local Board Schools ".*—Every public primary school now existing or hereafter

to be established by local boards within the area subject to a district board's authority shall be maintained by the said board with the assistance of the grants-in-aid obtainable, under rules framed or executive orders issued from time to time by Government, from the provincial revenues. Every such school shall be called "a Local Board School".

2. *Current charges of primary education to be defrayed by district local boards.*—Each district local board shall defray the charges, at the rates from time to time sanctioned by Government in the Educational Department, for the payment of :—

(1) the salaries and allowances of the teachers considered necessary by the Educational Inspector of the Division for employment in local board schools in the area subject to the board's authority ;

(2) The establishment, if any, considered necessary by the Educational Inspector of the Division for employment in such schools ;

(3) The stipends of teachers under training in institution established for this purpose by Government, for employment in such schools ;

(4) Grants-in-aid, under rules sanctioned or executive orders issued from time to time by Government to private schools, whenever it may be determined, in accordance with the said rules or orders, to aid primary schools of that class.

3. *School buildings, with furniture, etc., to be provided at cost of district local boards.*—The cost of providing, wherever necessary within the area subject to their respective authority, new buildings, whether by purchase, erection or hire, for the suitable accommodation of local board schools and of repairing the existing school buildings and of supplying and maintaining in serviceable condition the requisite furniture, books and other apparatus of the said schools shall also be a charge upon district local boards.

4. *Powers of taluka local boards in educational matters.*—Each taluka local board shall have power within the area subject to its authority :—

(1) of proposing the places at which new local board schools should be opened and the manner in which accommodation therefor should be provided ;

(2) of advising upon the transfer or abolition of existing local board schools ;

(3) of suggesting the class of each such school with reference to its cost, the selection being from classes recognised by the Government Educational Department ;

(4) of prescribing the standard of teaching in each such school, the selection being from standards recognised by the Government Educational Department.

Nothing in this rule shall be deemed to affect the authority of the district and taluka local boards, respectively, under section 80 of the Act, with regard to expenditure.

5. *Power of district local boards in educational matters.*—Authority for establishing or supporting educational objects falling under section 50 (*l*) of the Act shall vest in the district local board alone : Provided that such authority shall not be exercised except with the previous approval of Government, to be obtained through the Director of Public Instruction.

6. *Visiting of local board schools.*—The district and taluka local boards shall make such arrangements as they think fit for the periodical visiting by members or by committees appointed by them, respectively, for this purpose, of every local board school in the area subject to their respective authority.

7. *Administration of local board schools to rest with the Government Educational Department.*—The administration of local board schools as regards teaching and discipline, the fixing of the rate of monthly admission and re-admission fees to be paid by pupils and the number of free scholars to be admitted to each such school, the abolition or transfer of such schools, the appointment, transfer, punishment, dismissal, discharge from service of the teachers and other establishment, the fixing and payment of the teachers' salaries, allowances and pension contribution and the grant of leave of absence to the teachers and other establishment shall be conducted by the Government Educational Department.

8. *Grants-in-aid from local fund to private schools to be fixed according to rules prescribed by Government.*—The amount of the grant-in-aid to be given to a private school which a local board determines to assist, in lieu of establishing a local board school, shall be fixed by the Government Educational Department according to the rules prescribed or executive orders issued from time to time by Government in this behalf.

9. *Local board schools to be inspected and examined by the Government Educational Department and other district officers.*—Local board schools will be subject to periodical inspection and examination by officers of the Government Educational Department and by other district officers whom Government from time to time think fit to entrust with this duty.

Every member of the district or taluka local board within whose local limits the school is situate shall be entitled to be present at any such inspection or examination.

10. *Copies of school inspection reports to be furnished to taluka local boards.*—A copy of every school inspection report made by the Government Deputy Educational Inspector shall be forwarded by him to the taluka local board within whose local limits the school is situate.

11. *Complaints, etc., of local boards regarding local board schools how to be dealt with.*—Any complaint, observation or suggestion which, on the recommendation of any one or more of its members, or with reference to the Government Deputy Educational Inspector's inspection report, any local board shall think fit to make regarding the management or discipline of any local board school within the area subject to such local board's authority shall be addressed by it, in writing, to the Government Educational Inspector, and if it emanates from a taluka local board, shall be forwarded through the district local board, which may record its opinion thereon.

The Government Educational Inspector shall, to the best of his ability, give effect to the views of the local boards or the district local board, if there is a difference of opinion between the two boards. If the district local board is dissatisfied with the Educational Inspector's decision, it may represent the matter, through the Director of Public Instruction, to Government.

12. *Copy of Government Deputy Educational Inspector's annual report on local board schools to be furnished to district local board.*—The annual report of the Government Deputy Educational Inspector on the local board schools of a district shall briefly discuss all points raised by the local board or by district officers during the working season.

A copy of the report shall be sent to the district local board not later than the 1st of May. Any remarks which the said board may think fit to communicate thereupon should be forwarded through the Collector so as to reach the Director of Public Instruction not later than the 1st June, and a copy of the remarks should be forwarded to the Government Educational Inspector.

13. *Plans and estimates of school buildings to be approved by the Government Educational Department.*—No school building or extension of a school building shall be constructed by a district local board unless the plans and estimate for the same have been approved by the Government Educational Inspector, if the cost of the work is not to exceed Rs. 1,000 or by the Director of Public Instruction in any other case.

14. *Sites for school buildings to be determined with the approval of the Government Educational Inspector.*—Before commencing to erect a building for the accommodation of a local board school the site for the same must be approved by the Government Educational Inspector.

In the event of a difference of opinion between a local board and the Government Educational Inspector as to the suitability of a proposed site, the question shall be referred, through the Director of Public Instruction, for the decision of Government.

15. *Government Deputy Educational Inspector to represent educational wants to taluka local boards.*—Every Government Deputy Educational Inspector shall bring to the notice of each taluka local board in his sub-division from time to time, in writing, the educational wants of the area subject to such board's authority and the said boards shall take the same into their consideration at meetings at which the Deputy Educational Inspector has an opportunity of being present.

16. *Government Deputy Educational Inspector to forward lists of educational objects to Educational Inspector for his use when the district local board frames the budget.*—Lists of the objects of expenditure placed before taluka local boards by the Government Deputy Educational Inspector shall be forwarded by him to the Government Educational Inspector, together with explanations of the results of their discussion by the taluka local boards, and his own opinion thereon; and the Government Educational Inspector shall include or exclude such of the said objects as he thinks fit in the proposals which he shall submit to the district local board when the educational budget estimate is under consideration.

17. *Taluka local boards to submit recommendations to the district local board for framing the educational budget.*—Each taluka local board shall submit to the district local board a list of the objects for which they recommend that provision be made in the educational budget estimate.

S. 133 (g).

G. N., G. D., No. 4460, dated 23rd January 1924.

Amended by G. N., G. D., No. 4460, dated 24th January 1928.
Amended by G. N., G. D., No. 4456-A, dated 1st November 1928.

Amended by G.N., G.D., No. 4460, dated 29th September 1930.
Amended by G.N., G.D., No. 4460, dated 12th December 1933.
Amended by G.N., G.D., No. 4460, dated 5th February 1934.
Amended by G.N., G.D., No. 4460, dated 21st July 1934.
Amended by G.N., G.D., No. 4460, dated 20th September 1935.
Amended by G.N., G.D., No. 8941, dated 15th March 1938.
Amended by G.N., G.D., No. 2101/33, dated 26th March 1938.
Amended by G.N., G.D., No. 4460, dated 13th August 1945.
Amended by G.N., H. & L.G.D., No. S. 128 (14), dated 13th September 1947.

In exercise of the powers conferred by clause (*g*) of section 133 of the Bombay Local Boards Act, 1923 (Bom. VI of 1923), and in supersession of (so much of Government Notifications in the Revenue Department, No. 9248, dated the 21st November 1884, and No. 78, dated the 7th June 1885, as relates to the appointment, control, punishment and dismissal of the officers and servants of local boards), the Government of Bombay is pleased to make the following rules regulating the appointment, control, punishment and dismissal of the officers and servants of local boards and the extent of contributions to the pensions and leave allowances of Government officers employed by local boards, namely :—

1. *Delegation by the district local board of the power of appointing officers and servants.*—A district local board may delegate to its President or the President of a taluka local board subordinate to it the power of appointing any officer or servant on a monthly salary not exceeding the following limits :—

			Rs.
(*i*) The President, District Local Board	...	...	100
(*ii*) The President, Taluka Local Board	...	...	20

1-A. *Delegation by the district local board of the power of punishing or dismissing an officer or servant.*—A district local board may delegate to its President or to the Chief Officer or to the Engineer in respect of subordinates of the public works section or to the President of a taluka local board subordinate to it the power of punishing or dismissing any officer or servant receiving a monthly salary not exceeding the following limits :—

			Rs.
(*i*) The President, District Local Board	...	...	100
(*ii*) The Chief Officer	...	...	30
(*iia*) The Engineer in respect of subordinates of the public works section	...	...	30
(*iii*) The President, Taluka Local Board	...	...	20

1-B. *Power to punish or dismiss the Chief Officer, Engineer, the Supervisor or the Accountant.*—Power to punish or dismiss the Chief Officer, the Engineer, Supervisor or the Accountant shall be exercised and performed by local boards alone and shall not be delegated to any Committee appointed or President elected by them under the Act.

1-C. *Local Boards not to delegate certain powers and duties to Committees.*—The powers and duties of local boards prescribed by section 120 of the Act shall be

exercised by local boards alone and shall not be delegated to any committee appointed by them under the Act.

2. *Appeal.*—Every order passed by the President of the district local board, the Chief Officer or the President of a taluka local board in exercise of the powers delegated to such President or Chief Officer under rule 1-A shall be subject to an appeal to the district local board which should be preferred within three months from the date of the orders passed by the President or the Chief Officer.

3. *Officers or servants to be heard before punishment.*—No officer or servant of a local board shall be removed from office, reduced, punished or dismissed without a reasonable opportunity being given him of being heard in his defence. Any written defence tendered by such officer or servant shall be recorded.

4. *Order of punishment.*—Every order of removal from office, reduction, punishment or dismissal or confirming a dismissal shall be in writing and shall specify the charge or . harges brought, the defence, and the reasons for the orders.

4-A. (1) No Chief Officer, Engineer, Health Officer or Accountant shall be removed from office or dismissed, save by the votes of at least two-thirds of the whole number of the members of the local board and with the previous sanction of Government.

(2) No Chief Officer, Engineer, Health Officer or Accountant shall be reduced, suspended or otherwise punished, save by the votes of at least two-thirds of the whole number of the members of the local board and with the previous sanction of the Commissioner.

(3) Notwithstanding anything contained in sub-rules (1) and (2), the Commissioner may, on the recommendation of a local board supported by a resolution passed by a majority of the members present at a special general meeting called for the purpose (which meeting shall be a quorum meeting), suspend any such officer and cause an inquiry to be made by such person and in such manner as he may direct, into the charges made against such officer. In the inquiry so held such officer shall be given a reasonable opportunity of answering the charges made against him. On the completion of the said inquiry, the result thereof shall be forthwith reported to the Commissioner.

(4) On the receipt of a report under sub-rule (3), the Commissioner, if he is of opinion—

(*a*) that such officer should be removed from office or dismissed, the Commissioner shall, without any delay, forward the said report to Government with his own recommendation thereon. Government may, thereupon, pass such order as they deem fit; or

(*b*) that there are not sufficient grounds for the removal from office or dismissal of such officer the Commissioner may, notwithstanding anything contained in sub-rule (2), direct such officer to be reinstated, reduced, suspended or otherwise punished.

4-B. The services of an officer and subordinate of Government in the Public Works Department may be lent or permanently transferred to a district local board on the following conditions only :—

(*i*) The Board shall pay him salary on a scale not lower than the scale at which he was receiving the salary from Government at the time of the

loan or transfer his services and such allowances as he would have received in Government service in similar circumstances.

(*ii*) The Board shall pay him travelling allowance at the rates admissible to person of similar rank in the service of Government in the Public Works Department.

(*iii*) (*a*) The Board shall pay to Government leave and pension contribution in respect of the person whose service has been lent and who continues to hold a permanent appointment under Government.

(*b*) The grant of leave to such person shall be regulated by rules applicable to the Government service to which he belongs.

(*iv*) (*a*) A person whose services have been permanently transferred to the Board shall be eligible for pension as provided in the rules in force in the Public Works Department of Government at the date of such transfer:

Provided that if he elects to join a provident fund established by the officers and servants of the Board, he shall, from and after the date of his joining the provident fund, be entitled in lieu of pension to the benefit of such fund only.

(*b*) Government shall pay such portion of his pension as may have been earned by him previous to the transfer of his services to the Board and the Board shall pay such portion thereof as may be earned from the date of such employment.

(*v*) Subject to the foregoing conditions and to a right of appeal to Government, the existing and future rights, liabilities, duties and powers of Government in respect of a person permanently transferred to a Board shall vest in and be exercised or performed by the Board.

(*vi*) Nothing in the rule shall be deemed to affect the terms of special agreement entered into by Government with a Board with regard to the loan or transfer of the service of any particular officer or subordinate.

5. *Pension and leave allowances of Government servants employed by local boards.*—The pension and leave allowances of Government servants employed by local boards will be according to such scale as may be prescribed by the State Government from time to time in the case of transfers to foreign service and the exact amount of such allowances shall in each case be intimated by the State Government to the district local board concerned at the time of the order sanctioning the transfer of an officer to the local board.

6. (1) An officer or servant of a local board shall not, except with the previous sanction of the local board—

(*a*) accept directly or indirectly on his own behalf or on behalf of any person, or

(*b*) permit any member of his family so to accept any gift, gratuity or reward or any offer of a gift, gratuity or reward from a person not a member of his family.

(2) Subject to any general or special order of the local board, any such officer or servant may accept a complimentary present of fruit or flowers or similar articles of trifling value, but all such officers and servants shall use their best endeavours to discourage the tender of such gifts.

(3) Any such officer or servant may accept, or permit any member of his family to accept, a gift from a personal friend, provided he is not in a position to confer any benefit upon the donor in the discharge of his official duties and has no reason to suppose that the gift is offered with any ulterior motive.

7. (1) An officer or servant of a local board shall not, except with the previous sanction of the President of the local board—

(*a*) receive any complimentary or valedictory address, accept any testimonial presented to him, or attend any public meeting or entertainment held in his honour; or

(*b*) take part in the presentation of a complimentary or valedictory address or of a testimonial to any other officer or servant of a local board or to any person who has recently quitted the service of the local board, or attend a public meeting or entertainment held in honour of such other officer, servant or person.

(2) Notwithstanding anything contained in sub-rule (1) such officer or servant may attend a farewell entertainment of a substantially private and informal character held as a mark of regard to himself or to some other officer or servant of a local board or to a person who has recently quitted the service of the local board, on the occasion of the retirement from the service or departure from a district or station of himself or such other officer, servant or person.

8. An officer or servant of a local board shall not, save with the previous sanction of the President of the local board, receive any trowel, key or other similar article offered to him at a ceremonial function such as the laying of a foundation stone or the opening of a public building.

9. A medical officer of a local board may accept any gift, gratuity or reward offered in good faith by any person or body of persons in recognition of his professional services.

10. Any officer and servant of a local board may not enter into any pecuniary arrangement for the resignation by one of them of any office under the local board for the benefit of the others. In case of a breach of this rule any appointment consequent upon such resignation shall be cancelled and the local board shall take such disciplinary action as it may deem necessary against the parties to the arrangement who are still in the service.

11. An officer or servant of a local board shall not lend money to any person possessing land within the local limits of his authority, nor shall he, except in ordinary course of business with a Joint Stock Bank or a firm of standing, borrow money from, or otherwise place himself under a pecuniary obligation to, any person subject to his official authority, or residing, possessing land, or carrying on business within the local limits of such authority.

12. An officer or servant of a local board shall not purchase or bid either in person or by agent, or in his own name or in the name of another or jointly or in shares with others, for any property which may under the provisions of the Bombay Local Boards Act, 1923, or of any other law for the time being in force be sold by order of a local board.

13. It shall be competent for an officer or servant of a local board or candidate for service under a local board to continue to hold any immoveable property, actually held by such officer, servant or candidate at the time of his entry into the service and thereafter to acquire any immoveable property by succession, inheritance or request, or, with the previous sanction of the local board, by purchase or gift.

14. Notwithstanding anything contained in rule 13 it shall be competent to an officer or servant of a local board to hold or acquire immoveable property in good faith for the purpose of a residence.

15. Every officer or servant of a local board or candidate for service under a local board shall make, on appointment to the authority having power to appoint him, through the usual channel, a declaration of all immoveable property which is held by him or his wife or any member of his family living with him or in any way dependent on him, and shall annually on the 1st April notify the said authority of any change that has occurred in such declaration.

The declaration shall be prepared afresh and submitted decennially :

Provided that a local board may exempt any class of ministerial servants from the scope of this rule.

16. An officer or servant of a local board shall not make any investment, other than an investment in immoveable property permitted by rules 13 and 14 which gives him such private interest in matters with which his public duties are connected as would be likely in the opinion of the local board to embarrass or influence him in the discharge of his duties.

17. An officer or servant of a local board shall not speculate in investments.

18. An officer or servant of a local bord, whether on duty or on leave shall not, without the special sanction of the local board, take part in the promotion, registration, or management of any Bank or other Company.

19. An officer or servant of a local board shall not, without the previous sanction of the local board engage in any trade or undertake any employment while on duty or on leave, other than his public duties.

It shall be competent to an officer or servant of a local board to take up occasional work of a literary or artistic character, provided that his public duties do not suffer thereby, but the local board may, in its discretion, at any time forbid him to undertake, or require him to abandon any employment which in its opinion is undesirable.

Explanation.—The secretaryship of a club does not constitute employment in the sense of this rule, provided that it does not occupy so much time of such officer or servant as to interfere with his official duties and that it is an honorary office, that is to say, that it is not remunerated by any payment in cash or any equivalent thereof.

20. When an officer or servant of a local board is adjudged or declared an insolvent, or when a moiety of the salary of such officer or servant is constantly being attached, or has been continuously under attachment for

a period exceeding two years, or is attached for a sum which in ordinary circumstances, cannot be repaid within a period of two years, he shall be liable to dismissal.

In every case under this rule the burden of proving that the insolvency or indebtedness is the result of circumstances which, with the exercise of ordinary diligence, the debtor could not have foreseen or over which he had no control, and has not proceeded from extravagant or dissipated habits, shall be upon the debtor.

21. An officer or servant of a local board shall not, unless generally or specially empowered by the local board in this behalf, communicate directly or indirectly to any person who is not officially connected with the local board or to the Press any document or information which has come into his possession in the course of his official duties or has been prepared or collected by him in the course of those duties whether from official sources or otherwise.

22. An officer or servant of a local board shall not, without the previous sanction of the local board, become the proprietor in whole or in part, or conduct or participate in the editing or management of any newspaper or other periodical publication.

23. Subject to the provision of rule 22 it shall be competent to an officer or servant of a local board to contribute anonymously to the Press, provided he confines himself within the limits of temperate and reasonable discussion ; and, if his connection with the Press is contrary to the public interest, the local board may withdraw his liberty to contribute.

24. An officer or servant of a local board shall not publish in his own name any statement of fact or opinion which may embarrass the relations between the local board and the people of the district or any sections of the people.

25. It shall be competent to an officer or servant of a local board, for the purpose of removing misapprehensions, or correcting mis-statements, to defend and explain in public the policy of the local board.

26. (1) An officer or servant of a local board shall not take part in, or subscribe, in aid of, or assist in any way, any political movement in India or any political movement relating to Indian affairs. Where there is room for doubt, whether any action which such officer or servant proposes to take will contravene this rule, he shall refer the matter to the Collector of the district through the President of the local board and thereafter shall act in accordance with such orders as may be passed by the Collector.

(2) Such officer or servant shall not canvass or otherwise interfere or use his influence in connection with or take part in any election to a legislative body :

Provided that such officer or servant, if qualified to vote at such election, may exercise his right to vote, but if he does so, shall give no indication of the manner in which he proposes to vote or has voted.

(3) Such officer or servant who issues an address to electors or in any other manner publicly announces himself, or allows himself to be publicly announced as a candidate or prospective candidate for election to a legislative body shall be deemed for purposes of sub-rule (2) to take part in an election to such body.

(4) The provisions, of sub-rule (2) shall also apply in the case of an election to any municipal council, local board, school board or other elective local body.

Explanation.—For the purposes of sub-rule (1) the expression "political movement" includes any movement or activity tending directly or indirectly to excite disaffection against, or to embarrass, the Government as by law established, or to promote feelings of hatred or enmity between different classes of His Majesty's subjects to or disturb the public peace.

27. (1) No officer or servant of a local board, who has been convicted and sentenced by a criminal court to imprisonment for any offence committed by such officer or servant while on duty or on leave, shall be allowed while in jail to draw any pay or allowance from the local board.

Provided that the local board may, if it so decides pay him a subsistence allowance from the date of his apprehension to the date of his conviction on the analogy of rule 156 of the Bombay Civil Services Rules.

(2) A local board shall not—

(i) reinstate such officer or servant on the expiry of his sentence, or

(ii) employ any person who has been convicted and sentenced to imprisonment for an offence by a criminal court,

unless the local board decide by a majority of two-third of the whole number of members that there are extenuating circumstances justifying such action.

28. A local board shall not without the express sanction of the Commissioner in writing employ in its service any person dismissed from Government service or from the service of any other local body.

G. N., G. D., No. 5001, dated 6th May 1925. S. 133 (h)

Amended by G. N., G. D., No. 5001, dated 19th August 1926.
Amended by G. N., G. D., No. 5001, dated 31st January 1928.
Amended by G. N., G. D., No. 5001, dated 27th July 1928.
Amended by G. N., G. D., No. 5001, dated 9th May 1929.
Amended by G. N., G. D., No. 5001, dated 28th November 1929.
Amended by G. N., G. D., No. 5001, dated 24th February 1930.
Amended by G. N., G. D., No. 3971, dated 3rd January 1933.
Amended by G. N., G. D., No. 5001, dated 19th May 1933.
Amended by G. N., G. D., No. S. 128, dated 26th March 1935.
Amended by G. N., G. D., No. 5001, dated 20th January 1934.
Amended by G. N., G. D., No. 417/33, dated 6th October 1934.
Amended by G. N., G. D., No. 2101/33, dated 26th March 1938.
Amended by G. N., G.D., No. S. 128, dated 23rd December 1943.
Amended by G. N., G. D., No. 8941, dated 1st January 1944.
Amended by G. N., G. D., No. 417/33, dated 7th July 1944.
Amended by G. N., G. D., No. 417/33, dated 8th February 1945.

In exercise of the powers conferred by clause (*h*) of section 133 of the Bombay Local Boards Act, 1923 (Bom. VI of 1923), and in supersession of so much of Government notifications in the Revenue Department, No. 9248, dated the 21st November 1884, and No. 78 dated the 7th January 1885, as subsequently amended, as relates to all miscellaneous matters connected with the general administration of local boards, the Government of Bombay is pleased to make the following rules generally for the

guidance of local boards and Government officers in all matters connected with the administration of the said Act and not therein specially provided for, namely :—

(1) *The inspection of works in progress.*—In the case of any work which is being executed for the Local Board by the Government Executive Engineer, any complaint, observation or suggestion which the standing committee may desire to make on the report of any member of the local board shall be communicated by the Chairman of the Committee without delay to the Government Executive Engineer, who shall to the best of his ability, give effect to the Committee's recommendation unless there is good cause for not doing so which should be communicated to the said Chairman of the Standing Committee.

(2) *Frequent inter-communication to be maintained between district local boards.*—Every district local board should maintain frequent communication with the district local boards of the adjacent districts with a view to unity of action and co-operation in all services and institutions of general benefit to the several areas subject to the authority of the said boards.

(3) *Government Executive Engineer to be supplied with sanctioned plans and estimates of works which are to be carried out by him.*—The sanctioned plans and estimates of works which are to be carried out by the Government Executive Engineer shall be sent to that officer by the President of the local board for which such works are to be executed for information and record in his office.

(4) *Indispensability of budget provision before expenditure is incurred.*—The approval of an estimate of the cost of a work or service and the provision of funds for the execution or maintance of that work or service are two entirely distinct proceedings. The mere approval of an estimate does not authorize the outlay of funds on a work or service. Both the approval of the estimate of the cost and provision of funds for the same in a budget estimate are necessary before a work or service can be commenced. To this rule the only exception admissible is the case of a pressing emergency provided for in section 90 of the Act.

(5) *Certain plans and estimates to be submitted for approval of Superintending Engineer before being approved or furnished by Government Executive Engineer.*—The Government Executive Engineer before approving under section 89 (1) (*b*) of the Act, a plan and estimate of any work which under the order of the State Government for the time being in force under section 45 (1) of the Act, will have to be executed by himself and, before furnishing to a local board a plan and estimate of any such work prepared by himself, shall unless the total cost of the work as estimated therein does not exceed the power of sanction exercised by the officer under the orders of the State Government in respect of works of the Central State Governments, obtain thereto the approval of the Superintending Engineer to whom he is subordinate.

(6) *Government Executive Engineers to be subordinate to Government Public Works Department authorities and to follow all the rules of that department in execution of local boards' work.*—The Government Executive Engineer shall be subordinate in all matters relating to the performance of his duties under the Act or under these rule to the same authorities to whom he is subordinate as an officer of the Government Public Works Department, and shall, in giving contracts for works which have to be executed by him for any Local Board and in all other details follow precisely the same rules and procedure as are applicable to the execution of works for the State Government, so far as the same are not inconsistent with the Act or with these rules.

(7) *Government Executive Engineer to be informed of work to be executed by him—and*; As soon as any local board's budget has been finally approved or sanctioned, the President (or Vice-President) of the board shall inform the Government Executive Engineer of the works to be executed by him during the year to which the budget estimate relates and shall send to that officer as required by rule 3 the sanctioned plans and estimates of the said works.

To arrange with local boards as to time etc., for their execution.—The Government Executive Engineer shall arrange, in communication with the local board, the time when each such work shall be commenced and the rate at which the same shall be progressed with.

(8) *Plan and estimate may not be altered by Government Executive Engineers without concurrence of local board.*—No alteration involving increased expenditure shall be made by the Government Executive Engineer in the plan or estimate of any work which he is executing for a local board without the previous concurrence of the Board : provided that if the expenditure does not exceed more than five per cent., the previous concurrence of the board is not required :

Provided that if a rise in prices necessitates a revision of the rates contained in the estimate, the Government Executive Engineer shall not be bound to act upon it, but may, if he thinks fit, forward a revised estimate for the approved of the local board and ask the board to allot the additional amount that will be required.

(9) *Government Executive Engineer to furnish an annual report to each local board.*—In addition to the monthly progress report to be furnished by the Government Executive Engineer, along with his requisition for a cheque for the cost incurred, to each local board for which he executes any work, the said officer shall furnish each board with a general report annually at the colse of each financial year.

The Government Executive Engineer shall at all times furnish to each local board for which he executes any work any additional information of a nature similar to that embodied in the said report which may be required by the board or its President (or Vice-President).

(10) *Superintending Engineer's Administration Reports to embrace works executed for local boards by Government Executive Engineers.*—The Government Executive Engineer shall forward a copy of his annual report to each local board and to the Superintending Engineer of his division and the annual Administration Reports submitted to Government by Superintending Engineers shall contain an account of the Principal Works carried out for local boards by the Public Works Department.

(11) *Government officer not to accept remuneration out of local fund without a previous sanction of the State Government.*—Except as is otherwise provided in sub-section (*3*) of section 45 of the Act, no person employed in any Government office shall receive from any local board or be paid out of any local fund any sum by way of remuneration for service rendered or to be rendered by him without the previous sanction of the Commissioner obtained through the usual channel of communication.

(12) *Charges defrayable by district local board under section 78 (a) of the Act not to be incurred without previous sanction of the State Government.*—No officer or servant whose salary or allowances shall be defrayable under clause (*a*) of section 78 of the Act by a district local board out of a local fund shall be employed in any Government office, and no expenses which shall be defrayable as aforesaid shall be incurred by any Government officer without the previous sanction of the State Government obtained through the usual channel of communication.

(13) *Letter under section 35 (j) to whom to be addressed.*—The letter to be addressed under clause (*j*) of sub-section (*2*) of section 35 of the Act intimating the date of an intended meeting to an officer of the Government Public Works and Educational Department should be addressed to the Executive Engineer of the District in the case of the Public Works Department and to the Educational Inspector in connection with a District Local Board meeting and to the Deputy Educational Inspector in connection with a taluka local board meeting in the case of the Educational Department or to such subordinate officer not lower in rank than a sub-divisional officer or Assistant Deputy Educational Inspector as the Executive Engineer or Educational Deputy Educational Inspector may in any case by a general or special direction specify for this purpose.

(14) *Copy of minutes to be certified to Collector and Prant Officer.*—A copy of the minutes of each meeting of a district local board kept under clause (*k*) of sub-section (*2*) of section 35 of the Act shall be certified as soon after the meeting as is practicable by the President to the Collector of the district and a copy of the minutes of the meeting of a taluka local board shall similarly be certified to the Prant Officer and also to the district local board concerned : provided that where there is no Prant Officer a taluka board shall certify the minutes to the Collector instead.

(15) *Agreement with Collector for service of notices, etc., by Government agency.*—When any district local board desires to take advantage of Government agency for service of notices, etc., under section 63 of the Act in the whole or part of its area, the President of the district local board shall address the Collector and enter into an agreement in the form in Schedule V hereto with him regarding the charges to be recovered for such service.

(16) *Annewari of crops to be communicated to President, district local board.*—As soon as the "annewari" of crops is fixed for and area "in which the State Government has declared that famine exists" the Collector shall communicate it to the President of the district local board, to enable the board if they so desire to make the application under sub-section (*2*) of section 93 of the Act for suspending the collection of the cess or any portion thereof. For purposes of sub-section (*2*) of section 93 of the Act famine includes "scarcity" or any such drought or deficiency of rainfall as necessitates the suspension of land-revenue.

(17) *Signing of warrant by Government officers.*—When any district local board so desires by a written application to the effect, the Collector may generally authorize in any area the Sub-Divisional Officer or Mamlatdar concerned to sign warrants on behalf of a district local board and may on a similar application authorize such warrants to be addressed to a Revenue Officer not lower in rank than a Circle Inspector.

(18) *Posts of Chief Officer, Engineer and Health Officer to be advertised.*—No permanent appointment under sub-section (*2*) of section 119 of the Act to the post of Chief Officer, Engineer or Health Officer shall be made (except in cases when the loan of a suitable officer from Government service is secured or when a suitable retired Government officer is available) until applications have been called for by advertisements in such newspapers as the President may select for the purpose and until at least two months have elapsed from the date of the first of such advertisements.

(19) *Qualifications for the said posts.*—Except in cases when the loan of suitable officer from Government service is secured, or when a suitable retired Government officer is available :

(1) no person shall be qualified for—

(*a*) the post of a Chief officer unless he has passed one of the degree examinations of the Bombay University or corresponding examinations of the other recognized Universities,

(*b*) the post of Engineer unless he has passed the B.E. or L.C.E. or any corresponding examination and unless he has actual experience of theexecution of road and building works for at least one year,

(*c*) the post of Health Officer unless, he holds (*a*) the degree M.B.B.S. of the Bombay University or an equivalent degree of any Indian or British University as well as (*b*) a British Diploma in Public Health or the degree of "B.Hy., Bombay", or the degree of "D.P.H., Calcutta";

(2) the appointments of Chief Officer, Engineer and Health Officer shall be made in the first instance on probation for one year.

(19-A) *Temporary appointment to the post of Chief Officer.*—Notwithstanding anything contained in clause (*a*) of rule 19, a district local board may, with the previous approval of the Collector and subject to the general or special orders of the Commissioner, appoint a person who does not possess the qualifications specified in clause (*a*) of rule 19 to the post of Chief Officer in vacancies for a period not exceeding three months in the aggregate in any financial year.

(20) *Approval of the State Government how to be obtained.*—The approval of the State Government required by sub-section (*2*) of section 119 of the Act for the appointment of Chief Officer, Health Officer and Engineer shall be applied for through the Collector of the District and the Commissioner.

(20-A) *Qualifications for post of Village Panchayat Auditor and Inspector.*—No person shall be qualified for the post of a Village Panchayat Auditor or Inspector unless he—

(1) has served not less than five years under a Local Board or School Board.

(2) has passed, or has been exempted from passing, any of the following examinations:—

(*i*) the Local Fund Accounts Clerks' Examination,

(*ii*) the Local Fund Accountants' Examination, and

(*iii*) the Examination for the Diploma of the Local Self-Government Institute, Bombay:

Provided that a candidate who has passed the Local Fund Accountants' Examination, or the Examination for the Diploma of the Local Self-Government Institute, Bombay, shall be preferred.

(21) *Qualifications for other posts.*—For the clerical and other appointments, the salaries of which are paid in part or in whole by the State Government, under the Local Board the minimum qualifications shall be the same as those for eligibility for corresponding appointments in Government service, and in filling up the appointments due regard shall be had to the necessity of securing proper admixture of the different castes in the district.

(22) *Power to write off irrecoverable sums.*—(1) The Commissioner may write off any sum up to Rs. 500 (in each case which forms part of the local fund of a local board or to which a local board is lawfully entitled and which has, in his opinion, become irrecoverable, provided that—

(*a*) the loss does not disclose a defect of system, the amendment of which requires the order of the State Government, and

(*b*) there has not been any serious negligence on the part of some individual officer or officers which might possibly call for disciplinary action.

(1A) Subject to the proviso to sub-rule (1), the Collector, when exercising his power of writing off irrecoverable amounts of state revenues up to a limit of Rs. 100, may also write off the cess described in sections 93 and 95 of the Act due thereon to which a local Board is lawfully entitled and which has, in his opinion, become irrecoverable.

(2) In cases not falling under section 43 (*b*) of the Act, any sum which is lost to a local board otherwise than by theft or misapplication by the employees of the local board may be written off by—

(*a*) a district local board to the extent of Rs. 250 (in each case), and

(*b*) a President of a district local board to the extent of Rs. 25 (in each case)

if in the opinion of the district local board or the President, as the case may be, such sum has become irrecoverable.

(3) Nothing contained in this rule shall apply to cases for which provision for writing off has been specially made in the rules made under sub-section (*1*) of section 100.

(23) *Application of Fundamental Rules and the Supplementary Rule framed by the State Government.*—In regard to matters covered by them and in so far as they are not inconsistent with the rules framed by the Local Board under section 123 of the Act, the Fundamantal Rules and the Supplementary Rules framed by the State Government, as amended from time to time, shall be applicable to all employees of District Local Board. The authority in these rules vested in the Government of Bombay or in higher authorities shall, in regard to employees of District Local Boards be considered to vest in the Board except as provided for in the rules framed by the State Government under section 133 (*g*) of the Act.

(24) *Travelling allowance admissible to local board employees.*—Travelling allowance is admissible to local board employees engaged in local board elections or in any Government work at the same rates and subject to the same rules as are applicable to similar officers under the State Government. For the payment of any excess above the allowance so admissible the express sanction of the State Government shall be required.

(25) *Members' interest in local board matters to be reported to Government officers.*—Every local board shall, by the end of every calendar year, furnish to the Collector a return showing whether any member of the board has any interest in matters administered by the board, as contemplated by section 9 (*1*) (*e*) of the Act.

(26) *Advances for purchase of Motor Car, Motor Cycle or other means of conveyance.*—(1) A district local board may sanction an advance to its salaried employee for the purchase of a Motor Car, Motor Cycle, or a means of conveyance other than a motor car or a motor cycle on terms and conditions similar to those laid down in Chapter 13 of the Financial Rules under Devolution Rule 37 (*e*) ;

(2) The advances shall be limited to permanent outdoor staff ;

(3) The power of making advances shall be exercised by the Board and not delegated to the President or to a Committee appointed by the Board.

(27) *Advance for payment of session fee to permanent employees for attending classes conducted by the Local Self-Government Institute, Bombay State.*—A district local board may grant an advance to its permanent employee, who is deputed to undergo

training in the Local Government Diploma Classes conducted by the Local Self-Government Institute, Bombay State for payment of the fees of the Institute, of an amount equal of the fee prescribed by the Institute for the session to which he has been admitted. The amount so advanced shall be recoverable from the salary of the employee in monthly instalments spread over a period not exceeding twelve months. The advance shall not be paid unless the employee executes a bond with a surety that he shall repay the advance in the manner herein specified and serve the board for a minimum period of five years after he secures the Local Self-Government Diploma, and that in case of wilful default in so serving, or dismissal from service, he shall forthwith repay in the case of dismissal from service the balance of the advance due and in the case of wilful default in serving the balance of the advance due together with a penalty of Rs. 100 or an amount equal to the study leave salary, if any, drawn by him while undergoing training, whichever is greater.

(28) *Grant of leave to members of the work-charged establishment employed by the district local boards.*—(1) Subject to the provisions of the following rules, a member of a workcharged establishment employed by a district local board on regular work from year to year may be granted leave fora period not exceeding 1/22nd of the period of continuous duty performed by him and not exceeding one month at a time.

(2) If no substitute is appointed during the priod of the leave granted to any member under rule 1 he shall be paid, during the said period allowance at the rate of the pay payable to him on the date immediately preceding the date on which the period of the leave commences ; and if a substitue is appointed, he shall be paid, during the said period, allowance at a rate equivalent to the amount of the excess, if any, of the pay payable to him on the date immediately preceding the date on which the period of leave commences, over the pay of the substitute.

(3) Except for special reasons to be recorded in writing leave shall not be granted to any member unless—

(i) he has served continuously for at last 22 months ;

(ii) his services are likely to be required for a period of not less than six months after the expiry of the period of the leave ; and

(iii) he signs an agreement to the effect that he will serve on the work-charged establishmemt, should his services be required by the district local board, for a period of not less than six months after the expiry of the period of his leave, and that on his failure to do so he shall refund the amount of the allowance paid to him during the period of his leave.

(4) No leave account of any member shall be maintained. The leave due at any time to any member shall be calculated only on the period of the continuous duty performed by such member up to the date on which the leave is to be granted to him. In case the duty performed by any member is interrupted on any day he shall forfeit all claims to leave earned up to that day.

Schedule.

(*See* rule 15.)

AGREEMENT

This agreement made this the day of in the year the one thousand nine hundred and twenty between the district local board of established under the Bombay Local Boards

Act, 1923 (Bom. VI of 1923), (hereinafter referred to as " the Local Board ") of the one part and the Governor of Bombay (hereinafter referred to as "the Governor") of the other part.

Whereas the District Local Board of desires to take advantage of agency of the Government of Bombay (hereinafter referred to as ' Government ') for the service of notices, etc., under section 63 of the Bombay Local Boards Act, 1923 (Bom. VI of 1923), in the whole or part of its area and whereas under rule No. 15 of the rules made by Government under section 133 (*h*) of the said Act the President of the Local Board has applied to the Collector of on behalf of the Governor to enter into an agreement regarding the charges to be recovered for such service.

This Indenture witnesseth that the Collector of on behalf of the Governor agrees to undertake the service of notices, etc., under section 63 of the Bombay Local Boards Act, 1923 (Bom. VI of 1923), for and on behalf of the Local Board on the following condition, namely :—

The District Local Board shall defray the charges of such service in accordance with the rates of fees for the service of notices and summonses by Revenue Courts prescribed under rules made under section 20 of the Court Fees Act, 1870 (VII of 1870).

In testimony whereof the President of the Local Board of and two other members of the local board have hereunto set their hands and the common seal of the local board hath been hereunto affixed and the Collector of hath set his hand and the seal of his office hereto on behalf of the Governor of Bombay, the day and year first above written.

Signed by } President.

President and

and

two members of the Local Board of and sealed with the common seal of the Local Board of in the presence of— } Members.

Signed, sealed and delivered by

Collector } Collector of

of in the presence of—

1

2

Note.—This should be executed by the President and two members of the Local Board under section 42 of the Bombay Local Boards Act, 1923, and by the Collector on behalf of Government. It should be engrossed on a stamped paper of the value of one rupee (1 Re.) until 1st April 1926 but need not be registered.

G. N., G. D., No. 117, dated 27th December 1928 (B. G., 1929, Pt. I-A, p. 1). S. 133 (h)

In exercise of the powers conferred by clause (*h*) of section 133 of the Bombay Local Boards Act, 1923 (Bom. VI of 1923), the Government of Bombay is pleased to sanction the following rules regulating advances for purchase of conveyances to its employee :—

1. *Advances for purchase of Motor Car, Motor Cycle or other means of conveyance.*—A District Local Board may sanction an advance to its salaried employee for the purchase of a Motor Car, Motor Cycle or a means of conveyance other than a motor car or a motor cycle on terms and conditions similar to those laid down in Chapter 13 of the Financial Rules under Devolution Rule 37 (*e*) ;

2. The advances shall be limited to permanent out-door staff ;

3. The power of making advances shall be exercised by the Board and not delegated to the President or to a Committee appointed by the Board.

G. N., G. D., No. 2170, dated 29th November 1933 (B. G., Pt. I, p. 2824). S. 133 (h)

In exercise of the powers conferred by clause (*h*) of sections 133 of the Bombay Local Boards Act, 1923 (Bom. VI of 1923), the Government of Bombay is pleased to issue the following orders for the guidance of the District Local Board, Satara, and the Government officers concerned in matters relating to the transfer of control of vaccination to that Board :—

1. *Definition.*—In these orders the "Board" means the District Local Board of Satara.

2. *Appointment of Health Officer.*—The Board shall with the approval of Government appoint a Health Officer and such Health Officer shall control the Vaccination staff as the Head of its Public Health Department.

3. *Vaccinating and inspecting staff.*—The Board shall maintain an adequate vaccinating and inspecting staff, the minimum strength of which shall be prescribed by Government and shall in addition maintain a sufficient leave reserve for vaccinators :

Provided that such minimum strength—

(*a*) shall not exceed the percentage per population maintained by the Government in the district, and

(*b*) shall be fixed after consultation with the Board.

4. *Conditions for the grant of permission to learn vaccination work.*—The Board shall not grant any person permission to learn vaccination work unless such person,

(*a*) has attained the age of 18 years and has not completed the age of 25 years ;

(*b*) has produced his School Leaving Certificate, as proof of age ;

(*c*) has passed the Marathi Vernacular School Final Examination ;

(*d*) has undergone an examination of physical fitness in the manner prescribed by the Board, and is found fit, and

(*e*) has produced a certificate of good moral character from a respectable person.

5. *Recruitment and training of vaccinating staff.*—(1) The Board shall not enrol any person as a trained candidate for appointment as vaccinator unless—

(*a*) such person has, with the permission of the President of the Board, undergone a course of instruction under a Senior Vaccinator for a period of six months and has during that period performed, under the personal supervision of his instructor, not less than 300 primary operations;

(*b*) the quality of his vaccination work and his general knowledge of vaccinator's duties have been certified as satisfactory at the end of the period of his training prescribed in clause (*a*), by the Inspector of Sanitation and Vaccination of the District;

(*c*) such person has undergone a further course of instruction for a period of one month under a Vaccinator working near the head quarters of the Health Officer of the Board; and

(*d*) such person has been examined at the end of the period of training prescribed in clause (*c*) by the Health Officer of the Board and certified by that officer to be fit for enrolment as a trained candidate.

(2) The Board shall not appoint any person as a vaccinator on probation unless such person has first undergone a refresher course under a Senior Vaccinator:

Provided that no person shall be permitted to undergo a refresher course unless he is enrolled as a trained candidate.

(3) No person shall be confirmed as a vaccinator unless such person has passed out successfully from the special training class held at the Vaccine Institute, Belgaum.

6. *Recruitment and training of Inspector's staff.*—The Board shall not enrol any person as a candidate for appointment as Inspector of Sanitation and Vaccination unless such person—

(*a*) has passed the Sanitary Inspectors' examination,

(*b*) has, during a continuous period of three months, vaccinated not less than 300 children under the personal supervision of a Senior Vaccinator,

(*c*) has for a period of one month received instructions in office duties from an Inspector of Sanitation and Vaccination,

(*d*) has for a period of six weeks undergone a course of instructions at the Vaccine Institute, Belgaum,

(*e*) has been certified fit for appointment as Sanitary Inspector by the Senior Vaccinator, the Inspector of Sanitation and Vaccination and by the Health Officer of the Board,

(*f*) has undergone an examination of physical fitness in the manner prescribed by the Board and is found fit, and

(*g*) has produced a certificate of good moral character from a respectable person.

7. *Equipment for vaccinators.*—The Board shall maintain the equipment for a vaccinator on a scale approved by the Director of Public Health. Such scale shall not be in excess of the scale maintained by Government in the district.

8. *Lymph to be used in vaccination.*—The Board shall use in vaccination the lymph manufactured at the Vaccine Institute, Belgaum.

9. *Taking over of Government staff.*—The Board shall take over the staff of Inspectors, Vaccinators and peons employed in the district, as Government may direct, on the terms and conditions on which they have been employed by Government. The said terms and conditions, shall not, except as hereinafter provided, be altered to the disadvantage of the said Inspectors, Vaccinators and peons without the previous sanction of Government.

10. *Right of appeal of the employees.*—Every member of the staff other than the Vaccinators' peons taken over by the Board under order No. 9 above, shall have a right of appeal to the Director of Public Health against any order involving his dismissal or reduction.

11. *Pension contribution and Provident Fund.*—(1) The Board shall pay pension contributions in respect of the staff taken over under order No. 9 and shall make due provision for the payment of pension of such staff from.....provided that the Board may, with the previous sanction of Government, give them, in lieu of pension, the option of joining the Provident Fund established by the Board.

(2) Every member of the staff taken over by the Board under order 9 shall be eligible for pension in accordance with the rules in force on the date of his retirement which would have applied to such member had he continued in Government service, and which shall be in force unless such member shall have previous to his retirement exercised the option, within the prescribed period, of remaining under the old rules to which such member was subject:

Provided that any member of the staff who has exercised the option of joining the Provident Fund established by the Board in lieu of pension shall from the date of his exercising such option be entitled to the benefit of such Provident Fund only.

(3) The person electing under clause (1) above to join the Provident Fund of the Board shall be entitled to such gratuity or pension from Government payable on retirement from the service of the Board as such person would have been entitled to in the event of his being invalided on the date on which he exercised the option, and to such further sum from the Board to be paid on retirement from the service of the Board as may stand to his credit in the Provident Fund Account, subject, however, to the conditions laid down in the rules regulating the Provident Fund established by the Board.

12. *Registers, reports and supervision.*—The Board shall—

(*i*) maintain such registers and submit such reports and returns to the officers of the Public Health Department of Government as may be prescribed by Government; and

(*ii*) give facilities for supervision and inspection by the officers of the said Department.

Such officers shall be entitled to make suggestions and recommendations for the consideration of the Board

13. *Payments to other local authorities and settlement of disputes.*—It shall be competent to the Board to make payments to other local authorities for the services of the staff of the said local authorities by mutual arrangement:

Provided that in the case of a dispute relating to any matter arising out of such arrangement, such dispute shall be referred to for decision to such officer as Government may from time to time appoint. The decision of such officer shall be final.

S. 133 (h) Bombay Local Boards Prevention of epidemic Diseases Orders, 1935.

G. N., G. D., No. 19, dated 24th April 1935 (B. G., Pt. I-A, p. 130).

Amended by G. N., G. D., No. 19-II, dated 21st September 1937.

Amended by G. N., G. D., No. 19, dated 20th August 1938.

In exercise of the powers conferred by clause (*h*) of section 133 of the Bombay Local Boards Act, 1923 (Bom. VI of 1923), the Government of Bombay is pleased, in supersession of all previous orders on the subject, to make the following orders for the guidance of local boards and Government officers in dealing with outbreaks of epidemic diseases :—

1. (1) *Short title.*—The orders may be called the Bombay Local Boards Prevention of Epidemic Diseases Orders, 1935.

(2) *Definition.*—For the purposes of these orders the expression epidemic disease shall include small-pox, chicken-pox, measles, plague, cholera, yellow fever, sleeping sickness, typhus, scarlet fever, jigger, influenza, malaria, diptheria, enteric fever and cerebro-spinal fever.

2. *Report of epidemic diseases to* $\frac{\textit{Mamlatdar}}{\textit{Mukhtyarkar}}$ / *Mahalkari*.— When any village is visited by or threatened with an outbreak of epidemic disease, the village officers shall forthwith report the fact to the Mamlatdar, Mukhtiarkar or Mahalkari, as the case may be.

3. *Deputation of Medical Officer.*—(1) As soon as a report is received under order 2, the Mamlatdar, Mukhtiarkar or Mahalkari, as the case may be, shall after consulting the President, or in his absence the Vice-President of the taluka local board (if such President, or Vice-President is then present at the headquarters of of the taluka or mahal, as the case may be), and the Medical Officer in charge of the dispensary at the headquarters, whether appointed by Government or the District Local Board direct by an order in writing either—

(*i*) such Medical Officer ; or

(*ii*) the Medical Officer in charge of the dispensary which receives grant-in-aid from Government or is maintained by the District Local Board and which is nearest to the village visited by or threatened with the outbreak of an epidemic disease, to visit the said village and shall send a copy of the order to the President of the district local board and to the Civil Surgeon of the District :

Provided that the Manilatdar or Mahalkari may not issue such a direction where in the circumstances of the case he does not consider it necessary to do so.

(2) Where there is no dispensary at the headquarters, the Mamlatdar, Muhktiarkar, or Mahalkari, as the case may be shall send a telegraphic intimation to the Civil Surgeon or the Chief Medical Officer in charge of the district. The Civil Surgeon or the Chief Medical Officer shall direct a Medical Officer from his own staff to visit the village forthwith.

4. *Persons to accompany the Medical Officer.*—The Mamlatdar, Mukhtyarkar, or Mahalkari shall send a taluka peon to accompany the Medical Officer in charge of the dispensary at the headquarters who shall have been directed to visit the

village under order 3. When a Medical Officer in charge of a dispensary, not situated at the headquarters of the taluka, is directed to visit any such village he may take the peon attached to his dispensary with him. The expenses incurred in taking such peon shall be borne by and recovered from the District Local Board concerned. The Mamlatdar, Mukhtyarkar, Mahalkari, Aval Karkun or Circle Inspector may, as far as practicable, accompany the Medical Officer.

5. *Duties of Medical Officer.*—The Medical Officer directed to visit the village under order 3 shall visit the village with the medical outfit and on his visiting the affected area, shall forthwith take such prilimnary measures both preventive and remedial as he may deem fit. Immediately after ascertaining the facts he will report by telegram to the Civil Surgeon of the District, the nature of the disease, the number of persons affected and the action taken by him.

6. *Village Officers to render assistance.*—The Village Officers of the village shall assist the Medical Officer for the purpose of carrying out these orders.

7. *Medical Officer to make a report.*—On his return from the village the Medical Officer shall forthwith submit to the President of the district local board, a report in writing stating the condition of the village with regard to the outbreak of the epidemic and the steps and measures taken by him to prevent or check the outbreak and recommending any further measures which in his opinion are necessary for the purpose. The Medical Officer shall send a copy of his report to the Mamlatdar, Mukhtyarkar, or Mahalkari, as the case may be and to the Civil Surgeon of the District.

8. *Mamlatdar / Mukhtyarkar / Mahalkari to forward remarks on the report.*—On receipt of a copy of the report of the Medical Officer, under order 7, the Mamlatdar, Mukhtyarkar or Mahalkari, as the case may be shall forthwith forward his remarks on the report to the President of the district local board. He shall also forthwith forward a copy of his remarks together with a copy of the report of the Medical Officer to the Collector, the Assistant Director of Public Health, and the Civil Surgeon or the Chief Medical Officer of the District.

9. *President to take action to deal with an epidemic.*—The President of the district local board shall take immediate steps under sub-section (2) of section 23 of the Bombay Local Boards Act, 1923, to deal with the epidemic disease and he shall, within five days of the receipt of the report of the Medical Officer under order 7, make a report of the steps taken by him to the Collector. The President shall send a copy of his report to the Mamalatdar, Mukhtyarkar or Mahalkari as he case may be and to the Assistant Director of Public Health and the Civil Surgeon or the Chief Medical Officer of the District.

10. *Collector to take action in certain circumstances.*—If no report is received by the Collector within the period prescribed by order 9, or if on receipt of the report, the Collector considers that the steps taken by the President of the district local board are inadequate, the Collector may take such steps under section 126 of the Bombay Local Boards Act, 1923, or such further steps as he may deem proper, in consultation with the Civil Surgeon at the District.

11. *Budget provision.*—Every district local board shall annually provide in its budget an amount equal to the average of the amounts spent during the three

preceding years for expenditure on matters in connection with the outbreak, threatened or otherwise, of an epidemic disease.

12. *Provision of medical outfit.*—Every district local board shall provide each dispensary under its control with a medical outfit or stock-box containing medicines, disinfectants and other articles enumerated in the schedule hereto, for taking preventive or remedial measures against an epidemic disease in an emergency.

13. *Supply of imprest money to Sub-Assistant Surgeon and recovery of expense from Board.*—Where a Sub-Assistant Surgeon is deputed by the Collector on epidemic duty, he shall supply the Sub-Assistant Surgeon with an imprest of Rs. 50 for his travelling expenses.

14. *Villages in an area where there is no taluka local board to be allocated to a dispensary.*—In districts where there is no taluka local board in any area the district local boards shall allocate villages within such area to a dispensary under its control for the purpose of these orders.

15. *Provisions for villages not included in the jurisdiction of a taluka local board.*—In the case of a village within an area which is comprised in any area for which no taluka local board has been established, the Mamlatdar, Mukhtyarkar or Mahalkari, as the case may be, shall forthwith, on receipt of report under order 2, send a telegraphic intimation of such report, to the President of the district local board and take action under order 2 as if the Medical Officer of the dispensary to which the village is allocated under order 14 is the Medical Officer in charge of a dispensary at the headquarters.

16. *Recovery of expenses.*—The expenses incurred by the Collector in connection with the epidemic shall, if not paid by the district local board concerned, be recovered under section 126 of the Bombay Local Boards Act, 1923.

SCHEDULE.

List of medicines, disinfectants and other articles in the stock-box.

Acidum Carbolicum.
Acidum Sulphuricum Aromaticum.
Bleaching powder (Stabilised).
Camphor in oil, ampoules of 1 c. c. containing 3 grs. camphor.
Cresol Saponified or Phenyle.
Vaccines.
Kaolinum.
Oleum Cajuputi.
Oleum Caryophylli.
Oleum Juniperi.
Potassii Permanganas.
Spiritus Aetheris.
Tablets Hypodermic Atropinæ Sulphas 1/100 Gr.
Tablets Digital in 1/100 Gr.
Tablets Strychnine Hydrochloridum 1/60 Grs.
Syringe Hypodermic—steel needles for
Steel Row 20 c.c.
Needles.
Spare Rubber plungers.
Spare Rubber washers.
Bowls E. S.
Brushes, nail.
Brushes, tin cases for.
Measure glass, minim, in case.
Measure glass, 1 oz.
Measure glass, 8 ozs.
Soap Carbolic.
Spoons dessert.
Boxes for soap.
Towel.
Boxes sliding lid empty for hypodermic tablets.

Tablets Medicinal Potassii Permanganas Salol coated 2 grs.
Loquor Iodi Mitis.
Forceps dissecting 5″.
Lamp Kapadia for sterilising Syringes.
Syringe Hypodermic all glass 20 minims, in cardboard box (without needles).

Bottles green stoppered square N. M. 8 ozs.
Bottles green stoppered square N. M. 4 ozs.
Bottles green stoppered square N. M. 1 oz.
Bottles green stoppered square W. M. 8 ozs.
Bottles green stoppered square W.M. 2 ozs.
Box wooden, empty either iron bound or plain.

G. N., G. D., No. 2314/33, dated 17th January 1944 (B. G., Pt. IV-B, p. 26). **S. 133 (h)**

In exercise of the powers conferred by clause (*h*) of section 133 of the Bombay Local Boards Act, 1923 (Bom. VI of 1923), the Government of Bombay is pleased to direct that no district local board shall change its headquarters without the consent of Government.

G. N., H. and L. G. D., No. S. 128 (18), dated 27th October 1948. **S. 133 (h)**

In exercise of the powers conferred by clause (*h*) of section 133 of the Bombay Local Boards Act, 1923 (Bom. VI of 1933), the Government of Bombay is pleased to make, for the guidance of local boards, the following rules for the payment of travelling and other allowances to private medical practitioners and other subordinate staff engaged on epidemic duty, namely :—

(1) A private medical practitioner engaged on epidemic duty shall be paid–

(*a*) a conveyance allowance at the rate of Rs. 5 per day when travelling within a radius of five miles from his headquarters ;

(*b*) a conveyance allowance at the rate of Rs. 5 per day or a travelling allowance for the cost actually incurred subject to a limit of annas six per mile, whichever is higher, when travelling beyond the radius of five miles from his headquarters.

Explanation.—For the purposes of travelling allowance, the medical practitioner shall be considered as a Government servant of the second grade.

(2) The medical practitioner shall be paid while on epidemic duty an honorarium of Rs. 10 per day in addition to the travelling allowance payable under rule (1).

(3) While on epidemic duty, the medical practitioner shall be entitled to take with him a compounder and a peon, if necessary :

Provided that such compounder and peon shall be entitled to duty allowance at the following rates :—

(*a*) Compounder at Rs. 1–4—0 per day ;

(*b*) Peon at 12 annas per day :

Provided further that the compounder and the peon shall also be entitled to travelling allowance at the rate admissible to a Government servant of the third grade or of the fourth grade, as the case may be, under the Bombay Civil Services Rules.

S. 133

G. N., G. D., No. 4456-B, dated 1st November 1928
(B. G., Pt. I, p. 2373).

In exercise of the powers conferred by section 133 of the Bombay Local Boards Act, 1923 (Bom. VI of 1923), the Government of Bombay is pleased to make the the following rule, namely :—

"1. *Local Boards not to delegate certain powers and duties to Committees.*—The powers and duties of local boards prescribed by section 123 of the Act shall be exercised by local boards alone and shall not be delegated to any committee appointed or President elected by them under the Act."

THE BOMBAY PREVENTION OF ADULTERATION ACT, 1925 (BOM. V OF 1925).

G. N., G. D., No. 3986/33, dated 16th March 1945 (B. G., Pt. IV-B, p. 36). **s. 7**

In exercise of the powers conferred by section 7 of the Bombay Prevention of Adulteration Act, 1925 (Bom. V of 1925), the Government of Bombay is pleased to notify the following sum for the purposes of the said section 7, namely :—

Rs. 3 for every analysis of any sample of food.

THE BOMBAY BETTING TAX ACT, 1925 (BOM. VI OF 1925).

G. N., F. D., No. 4397-S.T. (I), dated 26th November 1948 (B. G., Pt. IV-B, p. 1299). **S. 5**

In exercise of the powers conferred by section 5 of the Bombay Betting Tax Act, 1925 (Bom. VI of 1925), as amended by section 14 of the Bombay Finance (Amendment) Act, 1948, and in supersession of Government Notification in the Finance Department No. 4397-A (*i*), dated 1st April 1948, the Governor of Bombay is pleased to notify 12½ per cent. as the rate at which the totalisator tax referred to in the said section shall be charged, levied and paid to the Government of Bombay out of all monies paid into any totalisator by way of stakes or bets.

G. N., F. D., No. 4397-S.T. (II), dated 26th November 1948. **S. 8 (1)**

In exercise of the powers conferred by sub-section (*1*) of section 8 of the Bombay Betting Tax Act, 1925, as amended by section 14 of the Bombay Finance (Amendment) Act, 1948, and in supersession of Government Notification in the Finance Department No. 4397-A (*ii*), dated 1st April 1948, the Governor of Bombay is pleased to notify 12½ per cent. as the rate at which the betting tax referred to in the said sub-section shall be charged, levied and paid to the Government of Bombay, out of all monies paid or agreed to be paid to a licensed bookmaker by a backer in respect of bets made in an enclosure set apart by the licensees in accordance with the provisions of the Bombay Race Courses Licensing Act, 1912.

G. N., R. D., No. 5457-E-24, dated 22nd December 1925 (B. G., Pt. I, p. 3281). **S. 9 Bombay Totalisator Tax Rules, 1925.**

Amended by G. N., R. D., No. 5457/24, dated 24th June 1931.

Amended by G. N., R. D., No. 5457/24, dated 25th January 1938.

In exercise of the powers conferred by section 9 of the Bombay Totalisator Betting Tax Act, 1925 (Bom. VI of 1925), the Governor in Council is pleased to make the following rules for the purposes of the said Act, namely :—

1. *Short Title.*—These rules may be called the Bombay Totalisator Tax Rules, 1925.

2. *Definitions.*—In these rules,

(1) "the Act" means the Bombay Betting Tax Act, 1925;

(2) "section" means a section of the Act, and

(3) words defined in the Act shall have the meanings assigned to them in the Act.

3. *Returns of accounts.*—The licensees shall forward certified monthly returns to the officer prescribed in this behalf under section 6 in the form in the Schedule hereto setting forth for each race meeting the total amount of monies received by way of stakes or bets, inclusive of the totalisator tax at the rate notified by the State Government and the total amount of the totalisator tax collected.

4. *Officers to whom returns to be submitted and officers to inspect.*—The officer prescribed under section 6 and the officer empowered under section 7 shall be for Bombay City the Collector of Bombay and for the district of Poona the Collector of Poona.

5. *Officers may depute subordinates.*—The officer empowered under section 7 may depute any officer subordinate to him, at his discretion, in writing to inspect and take copies of totalisator accounts for all or any of the meetings and the person having the custody or control of the totalisator accounts shall permit such officer to do so and render him all assistance.

6. *Power to enter racecourse.*—The officer empowered under section 7 may authorise in writing any officer subordinate to him to enter the racecourse and totalisator premises during the meetings with a view to see whether the provisions of the Act or of these rules are being complied with.

SCHEDULE.

(Rule 3).

The Bombay Totalisator Tax Rules 1925.

[Year.]

Bombay Race Meeting Dated

Poona.

No. of tickets sold at Totalisator and class.	Price of Totalisator tickets sold including tax.	Gross receipts.	Percentage rate of tax.	Total amount of tax collected for each meeting.	Remarks.
1	2	3	4	5	6

4. *Officers to whom returns to be submitted and officers to inspect.*—The officer prescribed under section 6 and the officer empowered under section 7 shall be for Bombay City the Collector of Bombay and for the district of Poona the Collector of Poona.

5. *Officers may depute subordinates.*—The officer empowered under section 7 may depute any officer subordinate to him, at his discretion, in writing to inspect and take copies of totalisator accounts for all or any of the meetings and the person having the custody or control of the totalisator accounts shall permit such officer to do so and render him all assistance.

6. *Power to enter racecourse.*—The officer empowered under section 7 may authorise in writing any officer subordinate to him to enter the racecourse and totalisator premises during the meetings with a view to see whether the provisions of the Act or of these rules are being complied with.

SCHEDULE.

(Rule 3).

The Bombay Totalisator Tax Rules 1925.

[Year.]

Bombay Race Meeting Dated

Poona.

No. of tickets sold at Totalisator and class.	Price of Totalisator tickets sold including tax.	Gross receipts.	Percentage rate of tax.	Total amount of tax collected for each meeting.	Remarks.
1	2	3	4	5	6

G. N., R. D., No. 5457/24, dated 24th June 1931 (B. G., Pt. I, p. 1493).

S. 11 Bombay Betting Tax Rules, 1931.

Amended by G. N., R. D., No. 5457/24, dated 25th January 1938.

In exercise of the powers conferred by section 11 of the Bombay Betting Tax Act, 1925 (Bom. VI of 1925), the Governor in Council is pleased—

* * * * * * *

(2) to make the following* rules for securing the payment of the betting tax and for others matters to be prescribed for carrying into effect the provisions of the said Act, namely :—

1. *Short title.*—These rules may be called the Bombay Betting Tax Rules, 1931.

2. *Definitions.*—In these rules—

(*a*) "the Act" means the Bombay Betting Tax Act, 1925 ;

(*b*) "Section" means a section of the Act ; and

(*c*) words defined in the Act shall have the same meanings assigned to them as in the Act.

3. *Returns showing names of licensed bookmakers.*—The licensees shall, before the commencement of each racing season, forward a certified return to the officer prescribed in this behalf under sub-section (*1*) of section 9 in the form in Schedule A hereto, setting out the names of the bookmakers licensed or permitted by them, their ordinary vocation, their permanent address, and such other particulars as may be required and shall amend the return from time to time as may be required.

4. *Officers to whom returns of names of licensed bookmakers to be submitted.*—The officer prescribed under sub-section (*1*) of section 9 shall be for the City of Bombay, the Collector of Bombay, and, for the district of Poona, the Collector of Poona.

5. *Officers empowered to inspect accounts and take copies.*—The officer empowered by the State Government under sub-section (*2*) of section 9 shall be the Secretary of the Western India Turf Club :

Provided that the Collector of Bombay, when the race meeting is held in the City of Bombay, and the Collector of Poona, when the race meeting is held in Poona, shall also exercise the powers of an officer under sub-section (*2*) of section 9 for directing inspection and taking copies of accounts kept by licensed bookmakers, whenever he deems it necessary to do so.

6. *Officers may depute subordinates.*—The officer empowered under sub-section (*1*) of section 9 may depute any officer subordinate to him, at his discretion, in writing to inspect and take copies of betting accounts for all or any of the meetings, and the person having the custody or control of the betting accounts shall permit such officer to do so and shall render him all assistance.

7. *Payment of betting tax by licensed bookmakers and returns of accounts to be kept by them.*—(1) The licensed bookmakers shall be responsible for the payment of the betting tax to the Secretary of the Western India Turf Club and shall

* The amendments made by clause (*1*) of the preamble have been carried out in the Bombay Totalisator Tax Rules, 1925.

G. N., R. D., No. 5457/24, dated 24th June 1931 (B. G., Pt. I, p. 1493).

S. 11 Bombay Betting Tax Rules, 1931.

Amended by G. N., R. D., No. 5457/24, dated 25th January 1938.

In exercise of the powers conferred by section 11 of the Bombay Betting Tax Act, 1925 (Bom. VI of 1925), the Governor in Council is pleased—

* * * * * * *

(2) to make the following* rules for securing the payment of the betting tax and for others matters to be prescribed for carrying into effect the provisions of the said Act, namely :—

1. *Short title.*—These rules may be called the Bombay Betting Tax Rules, 1931.

2. *Definitions.*—In these rules—

(*a*) "the Act" means the Bombay Betting Tax Act, 1925 ;

(*b*) "Section" means a section of the Act ; and

(*c*) words defined in the Act shall have the same meanings assigned to them as in the Act.

3. *Returns showing names of licensed bookmakers.*—The licensees shall, before the commencement of each racing season, forward a certified return to the officer prescribed in this behalf under sub-section (*1*) of section 9 in the form in Schedule A hereto, setting out the names of the bookmakers licensed or permitted by them, their ordinary vocation, their permanent address, and such other particulars as may be required and shall amend the return from time to time as may be required.

4. *Officers to whom returns of names of licensed bookmakers to be submitted.*—The officer prescribed under sub-section (*1*) of section 9 shall be for the City of Bombay, the Collector of Bombay, and, for the district of Poona, the Collector of Poona.

5. *Officers empowered to inspect accounts and take copies.*—The officer empowered by the State Government under sub-section (*2*) of section 9 shall be the Secretary of the Western India Turf Club :

Provided that the Collector of Bombay, when the race meeting is held in the City of Bombay, and the Collector of Poona, when the race meeting is held in Poona, shall also exercise the powers of an officer under sub-section (*2*) of section 9 for directing inspection and taking copies of accounts kept by licensed bookmakers, whenever he deems it necessary to do so.

6. *Officers may depute subordinates.*—The officer empowered under sub-section (*1*) of section 9 may depute any officer subordinate to him, at his discretion, in writing to inspect and take copies of betting accounts for all or any of the meetings, and the person having the custody or control of the betting accounts shall permit such officer to do so and shall render him all assistance.

7. *Payment of betting tax by licensed bookmakers and returns of accounts to be kept by them.*—(1) The licensed bookmakers shall be responsible for the payment of the betting tax to the Secretary of the Western India Turf Club and shall

* The amendments made by clause (*1*) of the preamble have been carried out in the Bombay Totalisator Tax Rules, 1925.

submit to the said Secretary certified weekly returns in the form in Schedule B hereto giving the total sum paid or agreed to be paid as bets by backers on each race, and the betting tax due thereon.

(2) The Secretary of the Western India Turf Club shall forward certified monthly returns in the form in Schedule C to the Collector of Bombay, if the race meeting is held in the City of Bombay, or to the Collector of Poona, if the race meeting is held in Poona, setting forth for each race meeting the total sum paid to the licensed bookmakers as bets, and the total amount of the betting tax payable thereon.

(3) The Secretary of the Western India Turf Club shall, on receipt from the licensed bookmakers of the betting tax at the rate notified under sub-section (*1*) of section 8, pay the amount so received into the Government Treasury.

8. *Power to enter race course and the enclosure in which the bets are made.*—The officer empowered under sub-section (*1*) of section 9 may authorize in writing any officer subordinate to him to enter the race course and the enclosure set apart for making bets during the meetings with a view to seeing whether the provisions of the Act or of these rules are being complied with.

SCHEDULE A.

(Rule 3.)

Return of licensed Bookmakers.

Serial No.	Name (both the real name and the name by which the bookmaker is known on the race course, if any).	Address (during the racing season).	Permanent address.	Ordinary vocation.	Security taken.

SCHEDULE B.

[Rule 7 (1).]

WESTERN INDIA TURF CLUB, LIMITED.

Bookmaker's Return.

Poona Meeting Day 19 .

Race No.	Horse.	Investments.	
		Win.	Place.
		Rs.	Rs.

1.

=Total Rs.

=Total Rs.

——————Races. =Grand Total Rs.

4 per cent. on the above Grand Total of Rs. =Rs.

I declare that the above is a true return of my betting transactions for the day of 19 .

Licensed Bookmaker,
Western India Turf Club, Limited.

Dated 19 .

SCHEDULE C.

[Rule 7 (2).]

Bombay.
Poona. 19 .

Date of meeting.	Total sum of bets made with bookmakers.	Percentage rate of betting tax.	Total amount of tax collected at each meeting.	Remarks.
1	2	3	4	5

THE BOMBAY CO-OPERATIVE SOCIETIES ACT, 1925 (BOM. VII OF 1925).

G. N., R. D., No. 522/28/20383, dated 28th November 1928 (B. G., Pt. I, p. 2560). **S. 4**

Modified by G. N., R. D., 522/28/25881, dated 5th May 1938.
Modified by G. N., R. D., 522/28, dated 27th June 1938.
Modified by G. N., R. D., 522/28, dated 31st July 1939.

In exercise of the powers conferred by section 4 of the Bombay Co-operative Societies Act, 1925 (Bom. VII of 1925), and in supersession of Government Notifications in the Revenue Department No. 4634, dated the 6th May 1919 and No. 2169, dated the 20th July 1920, the Government of Bombay is pleased to confer on Assistant Registrars of Co-operative Societies all the powers of a Registrar under the said Act with the exception of the powers conferred by the following provisions of the said Act, namely :—

Sections 10, 14, 15, 16, 47, 48, 49, 50, 50A, 51, 52, 53, 63 (*3*) and 70.

G. N., R. D., No. 522/28, dated 31st January 1936 (B. G., Pt. IV-A, p. 215). **S. 4**

In exercise of the powers conferred by section 4 of the Bombay Co-operative Societies Act, 1925 (Bom. VII of 1925), the Government of Bombay is pleased to confer on the Assistant Registrar for Land Mortgage Banks all the powers of a Registrar under the said Act with the exception of the powers conferred by the following provisions of the said Act, namely :—

Sections 10, 14, 15, 16, 47, 48, 49, 50, 50A, 51, 52, 53 and 63 (*3*).

G. N., R. D., No. 522/28/361, dated 31st March 1937 (B. G., Pt. IV-A, p. 420). **S. 4**

In exercise of the powers conferred by section 4 of the Bombay Co-operative Societies Act, 1925 (Bom. VII of 1925), the Government of Bombay is pleased to confer on Assistant Registrars of Co-operative Societies the powers of a Registrar under section 59A (*1*) of the said Act.

G. N., R. D., No. 522/28/6797, dated 31st July 1937 (B. G., Pt. IV-A, p. 1086). **S. 4**

In exercise of the powers conferred by section 4 of the Bombay Co-operative Societies Act, 1925 (Bom. VII of 1925, the Government of Bombay is pleased to confer on the Deputy Registrar of Co-operative Societies all the powers of a Registrar under the said Act, with the exception of the powers conferred by the following provisions thereof, namely :—

Sections 10, 14, 15, 16 (in so far as the power relates to the amendment of the by-laws of the Bombay Provincial Co-operative Bank, the Bombay Provincial Co-operative Land Mortgage Bank, the Bombay Provincial Co-operative Institute, District Central Co-operative Banks, land mortgage banks, and urban banks with a working capital exceeding Rs. 50,000), 47, 48, 49, 50A, 53 and 63 (*3*).

S. 4 **G. N., R. D., No. 522/28/25881, dated 5th May 1938 (B. G., Pt. IV-A, p. 632).**

In exercise of the powers conferred by section 4 of the Bombay Co-operative Societies Act, 1925 (Bom. VII of 1925), and in modification of Government Notification in the Revenue Department, No. 522/28/20383, dated the 28th November 1928, the Government of Bombay is pleased to confer on Assistant Registrars of Co-operative Societies the powers of a Registrar under section 50 of the said Act to sanction the doing by a liquidator appointed under section 47 of the said Act of any of the things specified in—

(*a*) clauses (*f*) and (*g*) of the said section 50;

(*b*) clause (*c*) of the said section when the amount to be remitted or written off on account of a compromise or adjustment does no exceed in any individual case 20 per cent. of the total dues or Rs. 50, which ever is more; and

(*c*) clause (*e*) of the said section when the subject matter of the suit or legal proceeding is valued at not more than Rs. 100.

S. 4 **G. N., R. D., No. 522/28, dated 27th June 1938 (B. G., Pt. IV-A, p. 1110).**

In exercise of the powers conferred by section 4 of the Bombay Co-operative Societies Act, 1925 (Bom. VII of 1925) and in modification of Government Notification in the Revenue Department., No. 522/28/20383, dated the 28th November 1928, the Government of Bombay is pleased to confer on Assistant Registrars of Co-operative Societies the powers of a Registrar under sub-sections (*2*) and (*3*) of section 16 of the said Act, in so far as they relate to the amendment of the bye-laws of (*i*) agricultural credit societies (excluding land mortgage banks) and (*ii*) urban credit societies with a share capital of less than Rs. 2,000.

S. 4 **G. N., R. D., No. 522/28/37007, dated 16th December 1938 (B. G., Pt. IV-A, p. 2046).**

In exercise of the powers conferred by section 4 of the Bombay Co-operative Societies Act, 1925 (VII of 1925), the Government of Bombay is pleased to confer on the Personal Assistant to the Registrar of Co-operative Societies all the powers of a Registrar under the said Act, with the exception of the powers conferred by the following provisions thereof, namely :—

Sections 10, 14, 15, 16 (in so far as the power relates to the amendment of the bye-laws of the Bombay Provincial Co-operative Bank, the Bombay Provincial Land Mortgage Bank, the Bombay Provincial Co-operative Institute, the District Central Co-operative Banks, Land Mortgage Banks and Urban Banks with a share capital exceeding Rs. 20,000), 47, 48, 49, 50-A, 53 and 63(*3*).

S. 4 **G. N., R. D., No. 522/28, dated 24th July 1939 (B. G., Pt. IV-A, p. 1961).**

Superseded by G. O., R. D., No. 1457/39, dated 15th October 1946, in so far as it relates to the Assistant Registrar, Co-operative Finance.

In exercise of the powers conferred by section 4 of the Bombay Co-operative Societies Act, 1925 (Bom. VII of 1925), the Government of Bombay is pleased to confer the powers of a Registrar under sections 10 and 16 of the said Act on the officers mentioned below, namely :—

(1) Personal Assistant to the Registrar of Co-operative Societies.

(2) Assistant Registrar of Co-operative Finance.

G. N., R. D., No. 522/28, dated 31st July 1939 (B. G., Pt. IV-A, p. 1262). **S. 4**

In exercise of the powers conferred by section 4 of the Bombay Co-operative Societies Act, 1925 (Bom. VII of 1925), and in modification of Government Notification in the Revenue Department, No. 522/28/20383, dated the 28th November 1928, as amended by Government Notifications, Revenue Department, No. 522/28/25881, dated the 5th May 1938, and No. 522/28, dated the 27th June 1938, the Government of Bombay is pleased to confer on Assistant Registrars of Co-operative Societies the powers of a Registrar under the following sections of the said Act, namely :—

(*a*) Section 10, except in so far as the power under this section relates to the registration of central financing agencies including banking unions, urban banks, land mortgage banks, joint farming societies, housing societies and societies which have as their members other registered societies.

(*b*) Section 14.

(*c*) Sections 15, 16, 50, 50A, 51, 52, 54A and 63 (*3*) in so far as these sections relate to societies which the Assistant Registrars of Co-operative Societies are empowered to register under section 10 as provided in clause (*a*) above.

(*d*) Section 50 as provided in Government Notification, Revenue Department, No. 522/28/25881, dated 5th May 1938, in so far as it relates to societies other than those mentioned in clause (*c*) above.

G. N., R. D., No. 522/28, dated 21st January 1943 (B. G., Pt. IV-B, p. 44). **S. 4**

In exercise of the powers conferred by section 4 of the Bombay Co-operative Societies Act, 1925 (Bom. VII of 1925), the Government of Bombay is pleased to confer on Assistant Registrars of Co-operative Societies the powers of a Registrar under rule 17-A of the Bombay Co-operative Societies Rules, 1927.

G. N., R. D., No. 522/28, dated 23rd March 1944 (B. G., Pt. IV-B, p. 113). **S. 4**

In exercise of the powers conferred by section 4 of the Bombay Co-operative Societies Act, 1925 (Bom. VII of 1925), the Government of Bombay is pleased to confer on Assistant Registrars of Co-operative Societies and the Assistant Registrar, Land Mortgage Banks, the power of a Registrar under section 59B of the said Act.

G. O., R. D., No. 1457/39, dated 15th October 1946 (B. G., Pt. I, p. 3153). **S. 4**

In exercise of the powers conferred by section 4 of the Bombay Co-operative Societies Act, 1925 (Bom. VII of 1925), and in supersession of all previous notifications in so far as they relate to the Assistant Registrar, Co-operative Finance, the Government of Bombay is pleased to confer on the Assistant Registrar, Co-operative Finance, all the powers of the Registrar under the said Act, except those under section 64A thereof.

S. 4 G. N., R. D., No. 3150/45-J, dated 29th April 1947 (B. G., Pt. IV-B, p. 306).

In exercise of the powers conferred by section 4 of the Bombay Co-operative Societies Act, 1925 (Bom. VII of 1925), the Government of Bombay is pleased to confer on the officers specified in column 1 of the Schedule hereto annexed all the powers of a Registrar under the Bombay Co-operative Societies Rules, 1927, specified against them in column 2 of the said Schedule.

Schedule.

Officers.	Rules.
1. Joint Registrar of Co-operative Societies. 2. Joint Registrar for Industrial Co-operatives and Village Industries. 3. Deputy Registrars of Co-operative Societies. 4. Chief Auditor and Financial Adviser, Co-operative Department.	3, 5, 6, 6-A, 7, 8, 11, 12-A, 17, 24, 26, 27, 28, 32, 35, 37, 38 (3), 38 (5) and 41.
Assistant Registrars of Co-operative Societies.	32 and 35 in respect of all Societies; 3, 5, 6, 6-A, 7, 8, 11, 12-A, 17, 26, 28, 37, 38 (3) and 38 (5) in respect of the class of societies which the Assistant Registrars are empowered to register under section 10.

S. 4 G. N., R. D., No. 10298, dated 27th November 1948 (B. G., Pt. IV-B, p. 1306).

In exercise of the powers conferred by section 4 of the Bombay Co-operative Societies Act, 1925 (Bom. VII of 1925), the Government of Bombay is pleased to confer on the Assistant Registrar of Co-operative Societies for refugees, Bombay, all the powers of a Registrar under the said Act, except those conferred by section 64A and all the powers of a Registrar under the following rules of the Bombay Co-operative Societies Rules, 1927, namely :—

Rules 3, 5, 6, 6-A, 7, 8, 11, 12-A, 17, 24, 26, 27, 28, 32, 37, 38 (3), 38 (5) and 41.

S. 4 G. N., R. D., No. 3150/45(a), dated 29th August 1949 (B. G., Pt. IV-B, p. 1830).

In exercise of the powers conferred by section 4 of the Bombay Co-operative Societies Act, 1925 (Bom. VII of 1925), the Government of Bombay is pleased to confer on the Assistant Registrars of Co-operative Societies the powers of a Registrar under the following sections of the said Act, namely :—

(*i*) Sections 15A and 16A in respect of the class of Societies which the Assistant Registrars of Co-operative Societies are empowered to register under section 10 of the said Act under Government Notification, Revenue Department, No. 522/23, dated the 31st July 1929;

(*ii*) section 46A.

G. N., R. D., No. 3150/45(b), dated 29th August 1949 (B. G., Pt. IV-B, p. 1830). **S. 4**

In exercise of the powers conferred by section 4 of the Bombay Co-operative Societies Act, 1925 (Bom. VII of 1925), and in supersession of Government Orders noted below, the Government of Bombay is pleased to confer on the officers specified in column 1 of the Schedule hereto appended, the powers of a Registrar under the said Act, specified against them in column 2 of the said Schedule.

Government Orders, Revenue Department—

(1) No. 522/28 (*a*), dated the 31st July 1939.
(2) No. 522/28, dated the 6th November 1945.
(3) No. 9981/39, dated the 28th January 1946.
(4) No. 2492/45, dated the 9th August 1946.
(5) No. 1457/39, dated the 29th April 1947.
(6) No. 3150/45, dated the 29th April 1947.
(7) No. 4793/45, dated the 19th May 1947.

Schedule.

Officers. 1	Powers. 2
1. Joint Registrar of Co-operative Societies.	All the powers of a Registrar under the Act provided that powers under section 64A shall be exercisable only in respect of agricultural credit and non-credit societies and Urban credit and salary earners' Societies.
2. Joint Registrar for Industrial Co-operatives and Village Industries. 3. Divisional Deputy Registrars of Co-operative Societies. 4. Chief Auditor and Financial Adviser, Co-operative Department.	All the powers of a Registrar under the Act except powers under section 64A.

G. N., R. D., No. 6952/39, dated 23rd March 1942 (B. G., Pt. IV-B, p. 121). **S. 31 (2)**

In exercise of the powers conferred by sub-section (*2*) of section 31 of the Bombay Co-operative Societies Act, 1925 (Bom. VII of 1925), the Government of Bombay is pleased to direct that no officer of any of the following societies shall in any legal proceedings to which such society is not a party be compelled to produce any of such societies' books, the contents of which can be proved under sub-section (*1*) of the said section 31 or to appear as a witness to prove the matters, transactions and accounts therein recorded, unless by order of the Court or a Judge made for special cause :—

1. The Bombay Provincial Co-operative Bank, Limited.
2. All District Central Co-operative Banks.
3. All Urban Co-operative Banks with a share capital of more than Rs. 20,000.
4. The Bombay Provincial Land Mortgage Bank, Limited.
5. The Bombay Provincial Co-operative Marketing Society.
6. The Bombay Provincial Co-operative Insurance Society.

S. 28 (2) (a) **G. N., R. D., No. 7599, dated 28th May 1923 (B. G., Pt. I, p. 1137).**

Superseded by G. N., R. D., No. 10055/28, dated 22nd March 1939, in so far as it relates to the remission of stamp duty in respect of instruments other than those falling within items 57 and 59 in List I in the Seventh Schedule to the Government of India Act, 1935.

In exercise of the powers conferred by clause (*a*) of sub-section (*2*) of section 28 of the Co-operative Societies Act, 1912 (II of 1912), and in supersession of the Notification of the Government of India in the Finance Department No. 2781-F, dated the 23rd October 1919 so far as it applied to the Presidency of Bombay, the Government of Bombay is pleased to remit the stamp duty with which, under any law for the time being in force, instruments executed by or on behalf of any society for the time being registered under the said Act, or instruments executed by any officer or member of any such society and relating to the business of the society (other than cheques of individual members for an amount exceeding Rs. 20 drawn against their current accounts with Co-operative Banks) are chargeable.

S. 33 (2) (a) **G. N., R. D., No. 10055/28, dated 22nd March 1939 (B. G., Pt. IV-A, p. 562).**

Amended by G. N., R. D., No. 10055/28, dated 9th May 1939.

Amended by G. N., R. D., No. 3648/45, dated 26th July 1948.

Amended by G. N., R. D., No. 3648/45, dated 14th June 1949.

In exercise of the powers conferred by clause (*a*) of sub-section (*2*) of section 33 of the Bombay Co-operative Societies Act, 1925 (Bom. VII of 1925), and in supersession of Government Notification in the Revenue Department, No. 7599, dated the 28th May 1923, in so far as it relates to the remission of stamp duty in respect of instruments other than those falling within items 57 and 59 in List I in the Seventh Schedule to the Government of India Act, 1935, the Government of Bombay is pleased to remit the stamp duty with which under the law for the time being in force, instruments, other than those specified in the Schedule hereto annexed executed by or on behalf of any society for the time being registered under the said Act, or by any officer or member of any such society and relating to the business of such society are chargeable :—

Schedule.

(A) (*i*) Instruments whether attested or not in respect of transactions relating to loans and advances, loans or mortgages, cash credit or overdraft bonds, agreements of pawn or pledge, letters of hypothecation, executed by members of urban credit societies or banks, or by individual members (other than societies registered or deemed to be registered under the Act) of central financing agencies, including the Bombay Provincial Co-operative Bank, Limited and the value of which exceeds—

(*a*) Rs. 2,000 in the case of urban credit societies or banks, and

(*b*) Rs. 5,000 in the case of individual members of the central financing agencies, including the Bombay Provincial Co-operative Bank, Limited,

or where the said transactions are contracted on the security of agricultural or industrial produce, if their value exceeds—

(*a*) Rs. 10,000, in the case of urban credit societies or banks; and

(*b*) Rs. 20,000, in the case of individual members of the central financing agencies, including the Bombay Provincial Co-operative Bank, Limited.

(*ii*) Reconveyances or releases executed by officers of urban credit societies of banks in respect of mortgages the value of which exceeds Rs. 2,000.

(*iii*) The following instruments executed by officers or members of urban credit societies or banks—

(*a*) Conveyances relating to the business of such societies or banks, if the amount or value of the consideration exceeds Rs. 2,000;

(*b*) Leases, agreements to lease or transfers of leases.

(B) (*i*) Instruments executed by members of housing societies formed of persons belonging to classes other than agriculturists or backward communities, in respect of transactions of loans or advances, the value of which exceeds Rs. 5,000.

(*ii*) Reconveyances or releases executed by officers of the societies referred to in (*i*) above in respect of mortgages, the value of which exceeds Rs. 5,000.

(*iii*) Conveyances executed by any member of the societies referred to in (*i*) above, the amount or value of the consideration of which exceeds Rs. 5,000.

G. N., R. D., No. 3648/45(a), dated 26th July 1948 (B. G., Pt. IV-B, p. 607).

S. 33 (2) (b)

Amended by G. N., R. D., No. 3648/45 (a), dated 14th June 1949.

In exercise of the powers conferred by clause (*b*) of sub-section (*2*) of section 33 of the Bombay Co-operative Societies Act, 1925 (Bom. VII of 1925), hereinafter referred to as "the said Act" and in supersession of the Government Notification in the Revenue Department, No. 10055/28, dated the 9th October 1941, the Government of Bombay is pleased to remit the following fees payable under the law of registration for the time being in force, namely :—

(*a*) all fees payable by or on behalf of any society, for the time being registered or deemed to be registered under the said Act, in respect of instruments other than those specified in the Schedule hereto annexed; and

(*b*) all fees payable by any member or officer of such society, in respect of instruments, other than those specified in the said Schedule, executed by such member or officer and relating to the business of such society.

Schedule.

(A) (*i*) Instruments whether attested or not in respect of transactions relating to loans and advances, Promissory Notes, bills of exchange, loans or mortgages, cash credit or overdraft bonds, agreements of pawn or pledge, letters of hypothecation or credit, executed by members of urban credit societies or banks, or by individual members (other than societies registered

or deemed to be registered under the said Act) of central financing agencies, including the Bombay Provincial Co-operative Bank, Limited, and the value of which exceeds—

(*a*) Rs. 2,000, in the case of urban credit societies or banks; and

(*b*) Rs. 5,000, in the case of individual members of the central financing agencies, including the Bombay Provincial Co-operative Bank, Limited;

or where the said transactions are contracted on the security of agricultural or industrial produce, if their value exceeds—

(*a*) Rs. 10,000, in the case of urban credit societies or banks; and

(*b*) Rs. 20,000, in the case of individual members of the central financing agencies, including the Bombay Provincial Co-operative Bank, Limited.

(*ii*) Re-conveyances or releases executed by officers of urban credit societies or banks in respect of mortgages the value of which exceeds Rs. 2,000;

(*iii*) The following instruments executed by officers or members of urban credit societies or banks—

(*a*) Conveyances relating to the business of such societies or banks if the amount or value of the consideration exceeds Rs. 2,000;

(*b*) Leases, agreements to lease or transfers of leases.

(B) (*i*) Instruments executed by members of housing societies formed of persons belonging to classes other than agriculturists or backward communities, in respect of transactions of loans or advances, the value of which exceeds Rs. 5,000;

(*ii*) Re-conveyances or releases executed by officers of the societies referred to in (*i*) above, in respect of mortgages the value of which exceeds Rs. 5,000;

(*iii*) Conveyances executed by any member of the societies referred to in (*i*) above, the amount or value of the consideration of which exceeds Rs. 5,000.

S. 71 Bombay Co-operative Societies Rules, 1927.

G. N., R. D., No. 5978/24, dated 11th August 1927 (B. G., Pt. I, p. 1999).

Amended by G. N., R. D., No. 2882/28, dated 16th April 1930.

Amended by G. N., R. D., No. 684/28, dated 13th August 1930.

Amended by G. N., R. D., No. 3818/24, dated 8th January 1932.

Amended by G. N., R. D., No. 7776/28, dated 1st August 1932.

Amended by G. N., R. D., No. 9003/28, dated 10th October 1932.

Amended by G. N., R. D., No. 759/33, dated 2nd May 1934.

Amended by G. N., R. D., No. 1866/33, dated 5th October 1934.

Amended by G. N., R. D., No. 2539/33, dated 18th December 1934.

Amended by G. N., R. D., No. 3482/28, dated 1st July 1935.

Amended by G. N., R. D., No. 5290/33, dated 21st July 1936.

Amended by G. N., R. D., No. 6081/33, dated 4th June 1937.

Amended by G. N., R. D., No. 4373/28, dated 20th May 1938.

Amended by G. N., R. D., No. 759/33, dated 6th December 1938.

Amended by G. N., R. D., No. 7363/33/37324, dated 27th June 1939.

Amended by G. N., R. D., No. 5978/24, dated 11th August 1939.

Amended by G. N., R. D., No. 684/28, dated 4th April 1940.

Amended by G. N., R. D., No. 1330/39, dated 30th September 1940.

Amended by G. N., R. D., No. 7363/33, dated 8th October 1940.

Amended by G. N., R. D., No. 1330/39, dated 25th November 1941.

Amended by G. N., R. D., No. 2298/28, dated 30th January 1942.

Amended by G. N., R. D., No. 4373/73, dated 7th April 1942.

Amended by G. N., R. D., No. 1866/33, dated 8th April 1942.

Amended by G. N., R. D., No. 5533/39, dated 4th May 1942.

Amended by G. N., R. D., No. 7363/33, dated 19th June 1942.

Amended by G. N., R. D., No. 522/28, dated 17th August 1942.

Amended by G. N., R. D., No. 3791/33, dated 8th October 1942.

Amended by G. N., R. D., No. 9357/39, dated 6th May 1945.

Amended by G. N., R. D., No. 2003/45, dated 14th August 1948.

Amended by G. N., R. D., No. 7556/45, dated 19th October 1948.

Amended by G. N., R. D., No. 3652/45, dated 25th November 1948.

Amended by G. N., R. D., No. 1505/45-V, dated 28th February 1949.

Amended by G. N., R. D., No. 175/49, dated 10th August 1949.

Amended by G. N., R. D., No. 4311/45-III, dated 10th August 1949.

Amended by G. N., D. D., No. 110-II, dated 9th January 1950.

Amended by G. N., D. D., No. 795, dated 9th March 1950.

Whereas certain rules, which it was proposed to make under section 71 of the Bombay Co-operative Societies Act, 1925 (Bombay VII of 1925), were published in Government Notification in the Revenue Department No. 5978/24, dated 14th July 1926 :

And whereas the objections and suggestions received with reference to the said rules have been considered by the Government of Bombay :

Now therefore the Government of Bombay, in exercise of the powers conferred by section 71 of the Bombay Co-operative Societies Act, 1925 (Bombay VII of 1925), and in supersession of the notifications specified in the margin,* are pleased to make the following rules :—

*Government Notifications, Revenue Department :—
No. 4358 of 30th April 1919.
No. 321 of 3rd February 1920.
No. 1312 of 26th April 1920.
No. A—Misc. 1568 of 24th June 1920.
No. 783 of 19th March 1921.
No. 1937 of 29th July 1921.
No. A.—408 of 2nd December 1921.
No. 6337-A of 28th March 1923.
No. 6337 of 10th May 1923.
No. 7910 of 20th September 1923.
No. 8067 of 5th October 1923.
No. 9744 of 7th March 1924.
No. 7910 of 23rd June 1925.

1. *Short title.*—(*1*) These rules may be called the Bombay Co-operative Societies Rules, 1927.

Definitions.—(*2*) In these rules, unless there is anything repugnant to the subject or context, (*i*) the expression "the Act" means the Bombay Co-operative Societies Act, 1925 ; (*ii*) "section" means a section of the Act ; and (*iii*) words and expressions defined in the Act shall have the meanings assigned to them in the Act.

Registration.

2. *Application for registration.*—(*1*) Every application for the registration of a society under sub-section (*1*) of section 9 shall be in the form of Schedule A hereto annexed.

(*2*) In addition to the copy of the by-laws, which is required to accompany the application for registration under sub-section (3) of section 9 two other copies of the proposed by-laws of the society shall be forwarded therewith.

(*3*) In cases where one of the members of the society to be registered is a registered society, a member of the Managing Committee of such registered society shall be authorised by such Committee by resolution to sign the application for registration and the by-laws on its behalf, and a copy of such resolution shall be appended to the application.

3. *Decision of Registrar to be communicated in case of refusal to register.*—If the Registrar refuses to register the society or its by-laws under section 10, he shall communicate to the applicants his reasons for so doing.

By-laws.

4. *Matters in respect of which a society shall or may make by-laws.*—(1) The matters in respect of which every society shall make by-laws are the following :—

(*a*) The name and address of the society and its branches, the tribe, class or occupation of its members, if the membership is proposed to be so restricted, and the area for which it is to be registered ;

(*b*) the object of the society, the purposes to which its funds are applicable, the terms of admission of members, and their rights and liabilities, the consequences

of default in payment of any sum due by a member, and, in the case of credit societies, the conditions on which loans may be granted, and the rate of interest and the system of calculation of interest and the maximum number of members that may be admitted ; and, in the case of non-credit societies, the mode of conducting business, purchase, sale, stock-taking and other like matters ;

(*c*) the mode of holding meetings, and, subject to the provisions of rules 5 and 6, the manner of making, altering and abrogating by-laws ;

(*d*) the mode of appointment and removal of members of the committee and of the officers, if any, and the duties and powers of the committee and officers ;

(*e*) the manner in which capital may be raised ;

(*f*) the mode of custody and of investment of funds, and, subject to rules 14, 17, 18 and 19, the mode of keeping of accounts ; and

(*g*) the distribution of its profits.

(2) Every society may make by-laws in respect of any other matters incidental to the management of its business.

5. *By-laws.*—When a society has been registered, the by-laws submitted under sub-section (*3*) of section 9 shall, subject to any modification approved by the Registrar and adopted at a general meeting, having a quorum, by a majority of not less than two-thirds of the members present at such meeting, become the by-laws of the society.

6. *Amendment of by-laws.*—By-laws may be made, altered or abrogated by a resolution passed at a general meeting of the society ; provided that—

(1) due notice of any proposal to make, alter or abrogate the by-laws is given in accordance with the by-laws :

(2) the resolution is passed by not less than two-thirds of the members present at the general meeting at which a quorum shall be present, or, at an adjourned general meeting (at which if a quorum is not present within half an hour from the time appointed for holding the meeting, the members present shall form a quorum) and a copy of the resolution is forwarded to the Registrar within a period of three months from the date of the meeting. A copy of the existing by-law or by-laws so marked as to show the alterations proposed to be made, and three copies of the proposed amendments signed by the officers of the society, shall be attached to the copy of the resolution ; and

(3) the making, alteration or abrogation of the by-laws is approved and registered by the Registrar.

6-A. *Special General meetings at the instance of the Registrar.*—Notwithstanding anything contained in these rules or by-laws of a society as to the manner of summoning a general meeting and the notice to be given for the said purpose, any person authorised in this behalf by the Registrar may call a special general meeting, for which a requisition has been made by the Registrar under sub-section (*2*) of section 13, in such manner and at such time and place as the Registrar may direct. A special general meeting so convened shall have powers to transact all business which can be transacted at the annual general meeting under the bye-laws framed by the society and such other business as is specifically mentioned in the requisition made by the Registrar.

6-B. *Manner of giving notice of Preliminary resolution under sub-section (2) of section 15A.*—Any Society resolving to divide itself into two or more societies shall give a notice of the preliminary resolution to all persons, other than the members and creditors of the society, whose interests will be affected by the division of the Society in the following manner, namely :—

(*a*) the notice shall be in the form prescribed in Schedule AA *annexed hereto ;*

(*b*) a copy of the notice shall be sent to the Assistant Registrar, the Divisional Deputy Registrar and the Registrar ;

(*c*) a copy of the notice shall be sent by registered post to each of the persons, other than the members and creditors of the society, whose interests the society knows will be affected by such division ;

(*d*) the notice shall also be published not less than 10 days before the date of the meeting called for final adoption of the resolution, in two successive issues of a newspaper having circulation in the area in which the registered office of the society is situated and such publication shall be deemed to be sufficient publication for the purposes of section 15A (*2*).

7. *Loans and Deposits.*—Every society with unlimited liability shall, from time to time, fix in a general meeting the maximum liability which it may incur in loans and in deposits from non-members. The maximum so fixed shall be subject to the sanction of the Registrar, who may at any time reduce it, for reasons to be communicated by him to the society in writing, and may prescribe a period, not being less than four months within which the society shall comply with his orders. No such society shall receive any loan or deposit from a non-member which will make its liability to non-members exceed the limit sanctioned by the Registrar.

8. *Restrictions on borrowing by societies with limited liability, other than the Bombay Provincial Co-operative Bank.*—(1) No society with limited liability, other than the Bombay Provincial Co-operative Bank, Limited, shall, without the previous sanction of the Registrar, incur liability exceeding in total eight times the total amount of its paid up share capital, accumulated reserve fund and building fund minus accumulated losses.

(2) The State Government may, by general or special order, specify the conditions subject to the observance of which the Registrar shall give his sanction under sub-rule (1).

(3) In calculating the total amount of liability for the purposes of this rule, in the case of an agricultural purchase and sale society or a multipurpose society, specified in this behalf by the Registrar by general or special order, a sum equal to the amounts borrowed by such society from a central financing agency for giving advances on the security of agricultural produce shall be deducted from the amount of the actual liability of such society.

Explanation.—A central financing agency means a society the primary object of which is to lend money to other societies.

(4) In calculating the total amount of liability for the purposes of this rule, in the case of a district central co-operative bank or an urban co-operative bank a sum equal to the face value of the gilt-edged securities owned by such bank, up to an amount equal to twice the amount of the paid up share capital of the bank shall be deducted from the amount of the actual liabilities of such bank, provided

that the said securities are deposited in the custody of the Bombay Provincial Co-operative Bank, Limited. The Registrar may, if in his opinion any such bank is well managed and for special reasons, exempt it from the foregoing provision of deposit of securities.

8-A. *Restrictions on borrowing by Bombay Provincial Co-operative Bank.*—The Bombay Provincial Co-operative Bank, Limited, shall not incur liabilities exceeding in total twelve times the total amount of its paid up share capital and all reserves, including the reserve fund, reserve for marketing advances, building reserve, sinking fund for debentures, dividend equalization reserve, reserve for bad debts and reserve for overdue interest, minus accumulated losses, actual bad debts, if any, and overdue interest :

Provided that the Bank may incur liabilities in excess of the above limit by receiving deposits, subject to the observance of the conditions that the amount received as deposits in excess of the said limit shall not be utilized in the ordinary business of the Bank but shall be invested in Government securities or advances against Government securities or short term deposits with such banks as may be approved by the Registrar.

9. *Shares not to be hypothecated to the society.*—The shares of a society shall not be hypothecated to that society by its members as a security for a loan.

9-A. *Value of share of a member.*—If a member resigns his membership of a society or is removed under rule 45 or dies, the sum representing the value of his share or interest in the capital of the society to be paid to him or his nominee, heir or legal representative shall be ascertained as under :—

(*i*) In the case of a society with unlimited liability, it shall be the actua amount received by the society in respect of such share or interest.

(*ii*) In the case of a society with limited liability, it shall be the amount arrived at by a valuation based on the financial position of the society as shown in the last audited balance-sheet preceding the resignation, removal or death of such member provided that it shall not exceed the actual amount received by the society in respect of such share or interest.

10. *Deposits with Agricultural Credit Societies.*—Agricultural credit societies shall not accept deposits which are not fixed for a period of at least two months, except savings deposits in such societies as have made in their by-laws provision for the encouragement of thrift among their members by the opening of saving accounts.

11. *Loans on Suretyship of Non-Members.*—No society shall make any loan to a member on a bond secured by the suretyship of a non-member ; provided that the Registrar may, for special reasons, exempt any society by name from the operation of this rule.

12. *Writing off of losses.*—Losses may be written off against the reserve fund of any society, and, in the case of limited liability societies, if the losses exceed the reserve fund, the balance remaining may be written off against the share capital of the society :

Provided that (i) no losses shall be wrtten off without the sanction of a general meeting ; (ii) before any such losses are so written off, the society, if it is affiliated and indebted to a Central Bank, shall obtain the approval of that Central Bank

in writing, which approval shall be given after consultation with the Assistant Registrar, and shall be countersigned by him. If the society is not so affiliated, or if the society is so affiliated and is not indebted to the Central Bank, it shall first obtain the approval of the Assistant Registrar in writing; and (iii) if the society itself is a Central Bank, the approval of the Provincial Co-operative Bank, given in consultation with and countersigned by the Registrar, shall first be obtained :

Provided further that the Assistant Registrar or the Registrar, as the case may be, may, while according or countersigning the approval, impose such conditions as to the restoration of part or whole of the amount written off to the reserve fund from out of future profits, as he deems fit.

Explanation.—'Losses' includes losses on account of bad debts also.

12-A. *Amount of remission to be communicated by a society to the Debt Adjustment Board.*—The amount of remission to be communicated by a society to the Debt Adjustment Board under sub-section (*4*) of section 47 of the Bombay Agricultural Debtors Relief Act, 1939, shall be in accordance with the general or special directions issued by the Registrar from time to time in that behalf.

13. *Interlending.*—For the purposes of sub-section (*1*) of section 34 a loan also means and includes a deposit made by one society with another society.

14. *Accounts, Returns and documents.*—(1) Every credit society shall keep the following accounts and books, *viz* :—

(*a*) A register of members including persons nominated under section 27 ;

(*b*) A register of shares and debentures (where capital is raised by shares or debentues) ;

(*c*) A share transfer register (where capital is raised by shares or debentures) ;

(*d*) Cash account;

(*e*) Members' loan account ;

(*f*) Deposit account ;

(*g*) Loan register ;

(*h*) Interest account ;

(*i*) Expense account ;

(*j*) Bank account ;

(*k*) Minute book, recording the proceedings of general meetings ;

(*l*) Minute book, recording the proceedings of the Committee ;

(*m*) Register of members' creditworthiness ;

(*n*) Such other accounts and books as may from time to time be prescribed by the Registrar.

Provided the Registrar may exempt any society or class of societies from the operation of clause (*m*) mentioned above.

(2) Societies other than credit societies shall keep the accounts and books mentioned in clauses (*a*), (*d*), (*k*) and (*l*) of sub-rule (1) and such other accounts and books as may be approved or, from time to time, required by the Registrar.

(3) The Registrar may, by order in writing, direct any society to get any or all the accounts and books required to be kept by it under sub-rules (1) and (2) written up to such date, in such form and within such time as he may prescribe.

15. *By whom copies of documents or entries may be certified.*—For the purpose of section 31 copies of documents or entries in the books of a society may be certified by any officer of the society.

16. *Inspection of documents : Fees.*—Members of co-operative societies or the public may inspect the following documents in the Registrar's Office free of charge and may obtain certified copies thereof, on payment of the following fees :—

Application for registration of a society ..	Re. 0–2–0 each.
By-laws of registered societies	Re. 0–2–0 per folio.
Amendment of by-laws of a registered society ..	Re. 0–2–0 per folio.
Certificates of registration	Re. 0–2–0 each.
Orders for cancellation of the registration of a society	Re. 0–2–0 per folio.
Audit memorandum of a registered society ..	Re. 0–2–0 per folio.
Annual balance sheet	Re. 0–2–0 per folio.

17. *Registrar may require statements and returns to be furnished.*—The Registrar may require any society to submit any statement and any periodical return of receipts and disbursements on such dates and in such form as he may prescribe. Every housing society shall submit a property register to the Registrar on such dates and in such form as he may pescribe.

17A. *Preparation of necessary statement or return or accounts or books at the expense of the society.*—In case of failure by any society to submit any statement or or return mentioned in rule 17 or to maintain any account or books mentioned in rule 14, or to get such accounts or books written according to the direction given by the Registrar under rule 14, the Registrar may depute an officer of the State Government to prepare the necessary statement or return or accounts or books at the expense of the society. Such expense shall be recoverabe from the society in the manner specified in section 65.

18. *Periodical financial statements to be furnished.*—All registered societies classified by the Registrar as Central Banks or as Urban Banks with a working capital of more than Rs. 50,000 shall submit to that officer a quarterly finance statement in the form prescribed by the State Government for the quarters ending March 31st, June 30th, September 30th, and December 31st, not later than April 15th, July 31st, October 15th and January 15th respectively.

18A. *Maintenance of fluid resources.*—All societies which obtain any portion of their working capital by deposits shall maintain such fluid resources as may from time to time be prescribed by the Registrar.

19. (1) *Annual balance sheet.*—On or before July 31st of each year the committee of every society shall publish an annual balance sheet, showing (*a*) the profit and loss, and (*b*) the receipts and expenditure of the previous financial year, and (*c*) the assets and liabiities as they stood on June 30th. This balance sheet shall be open to the inspection of any member during office hours at the office of the society and a copy thereof shall be submitted, before August 15th, to the Auditor appointed by the Registrar for the audit of that society.

(2) The annual balance sheet for the year 1934–35 shall be for the period from the 1st day of April 1934 to 30th day of June 1935.

20. *Transfer of Interest.*—The name and address of every person nominated under section 27 and any revocation or variation of such nomination shall be entered in the register kept under rule 14, sub-rule (1), clause (*a*).

21. *Nomination of Persons.*—(1) A member may, by writing under his hand deposited with the society during his life time, or by a statement signed by the member made in any book kept by the society, nominate any person to whom under section 27 his share or interest in the society, or so much thereof as may be specified in such nomination, shall be paid or transferred on his death.

(2) A nomination so made may be revoked or varied by another nomination similarly made.

22. *Distribution of profits.*—In calculating the profits of a society for the year, all accrued interest which is over due shall be deducted from the gross profits of the year before the net profits are arrived at. All accrued interest, that has been so deducted from the profits of the year and is actually recovered during the subsequent year, may be added to the profits of the subsequent year.

23. *Distribution of bonus.*—No registered society shall distribute any bonus on shares beyond the dividend declared under section 38.

24. *Payment of dividend.*—(1) No society shall pay its share-holders a dividend exceeding 6¼ per cent. in any year on the paid-up share capital standing in the name of each share-holder :

Provided that if any consumers', producers', housing or farming society is unable to pay a dividend of 4 per cent. in respect of any year, it may make good the deficit by paying the difference out of profits in future years at any time not later than ten years immediately succeeding the year of such deficit.

(2) A society may credit in any year a sum not exceeding 2 per cent. on the paid-up share capital to a fund called the "Dividend Equalisation Fund" until the total amount in such Fund amounts to 6¼ per cent. of the paid-up share capital :

Provided that except for the purpose of paying a dividend, no withdrawals from such fund shall be made without the previous written sanction of the Registrar.

(3) No society shall declare a dividend at a rate exceeding that recommended by its managing committee or Board of Directors, as the case may be.

25. *Distribution of balance of profits.*—Any dstribution of the remaining balance of profits under section 40 and after the distribution of dividend under section 38 shall be in accordance with the by-laws of the society regarding such distribution. It shall be in proportion to the wages earned by each in the case of a producers' society, and to the amount of goods purchased by each member, or, where it is so provided in the by-laws, by each member or customer, in the case of a consumers' society. It shall also be in proportion to the amount of rent paid by each member in the case of a housing society, and, in the case of a resource society, may be in proportion to the goods obtained or sold through the society by each member, or to the loans borrowed from, and the deposits made with, the society by each member.

26. *Restrictions on distribution of funds by way of bonus, dividend or otherwise.*—Without the sanction of the Registrar, no part of the funds of a registered society shall be divided, by way of bonus or dividend or otherwise, amongst its members in any year unless the entire expenditure incurred by such society has been debited in the annual profit and loss account before the net profit has been calculated :

Provided that any loss or portion of loss or account of bad debts written off during the year may not be so debited if it be deducted from any bad debt or with the sanction of the Registrar from the Reserve Fund.

26-A. *Rate of contribution to educational fund of Provincial Co-operative Institute.*—Every Society which pays a dividend to its members at a rate of 4 per cent. or more shall contribute towards the educational fund of the Bombay Provincial Co-operative Institute at the following rate, namely :—

(*a*) if the rate of dividend for any year is 4 per cent.	1 per cent. of the net profits of the year.
(*b*) if the rate of dividend for any year is more than 4 per cent. but not more than 5 per cent.	1¼ per cent. of the net profits of the year.
(*c*) if the rate of dividend for any year is more than 5 per cent. but not more than 6¼ per cent.	1½ per cent. of the net profits of the year :

Provided that if the net profits of any year of a society do not exceed Rs. 200, the Society shall not be required to contribute anything towards the said educational fund for that year.

26-B. *Co-operative Conference and contributions to expenses thereof by societies.*—No society shall contribute any money towards the expenses of any co-operative conference unless such conference is held under the auspices of a society which is authorised by its bye-laws to hold such conferences. The society holding the conference shall keep separate accounts of its income and expenditure due to such conference and such accounts shall be open to audit by the Registrar or the person authorised by him under section 22.

27. *Investment of funds.*—With the previous sanction of the Registrar any society may invest its funds, or a portion thereof, (*a*) in the shares of the Reserve Bank of India constituted under the Reserve Bank of India Act, 1934, (*b*) in loans raised by a local authority in the State of Bombay under the authority of the Local Authorities Loans Act, 1914 (IX of 1914), (*c*) in the purchase or leasing of land or buildings and (*d*) in the construction of buildings, provided that the purchase of such land or the construction of such buildings is likely to be advantageous to the society in the conduct of its business.

28. *Reserve Fund.*—The reserve fund of any registered society may be utilised in the business of the society, or be invested or deposited in any of the ways mentioned in clauses (*a*), (*b*), (*c*) and (*d*) of section 37. The Registrar may, for reasons to be communicated in writing by him to the society, by general or special order, direct that the latter course be adopted. In the case of a society constituted with the object of co-operative housing on a co-partnership tenancy basis, the reserve fund may be utilised for expenditure on the maintenance, repair and renewal of the buildings of the society

28-A. *Building Fund.*—The fund created by any registered society for the purpose of constructing buildings shall be called the building fund. The amount of such fund may, when it is not utilised for the construction of buildings be used in the business of the society or be invested or deposited in the same manner and subject to the same conditions as the reserve fund of such society is permitted to be used, invested or deposited under the Act and these rules.

29. *Levy of Audit fees.*—The Registrar may levy audit fees on all or any type of societies at such rates as may be fixed with the previous sanction of the State Government. The Registrar shall employ the proceeds of such audit fees in maintaining a staff to audit the accounts of the societies. Such audit fees shall be recoverable under section 65.

30. [*Deleted.*]

31. (1) *Audit of accounts of certain classes of societies.*—The following classes of societies shall get their accounts audited by any of the certified auditors appointed for the time being by the Registrar under section 22 to audit the accounts of such societies—

(*a*) Consumers' Societies with a turnover of Rs. 50,000 and over as at the close of the preceding co-operative year,

(*b*) Urban Banks and societies classed as 'A' or 'B' at the last statutory audit with a working capital of Rs. 50,000 and over as at the close of the preceding co-operative year.

(*c*) Housing Societies having no outstandings against them on account of Government loan, and

(*d*) any other societies notified by the Registrar :

Provided that the Registrar may direct that the accounts of any society shall be audited by an official auditor in any particular year or at certain regular intervals to be specified by him. The societies shall report the name or names of the certified auditors appointed by them for the particular year, to the Registrar or any other officer authorised by him in this behalf, so as to reach him before the 1st day of November every year. Failing the receipt of such report from any society before the said date or before the expiry of such further extension of time as may be granted by the Registrar or any other officer authorised by him, the Registrar or such other officer shall arrange for the audit of such society by an auditor appointed by him.

Explanation.—For the purpose of this sub-rule a certified auditor shall mean an auditor who holds a certificate under section 144 of the Indian Companies Act, 1913 or a Government Diploma in Co-operative Accountancy or Government Diploma in Co-operation and Accountancy or a person who has served as an auditor in the Co-operative Department of Government.

(2) If, after an inquiry under section 43 or an inspection under section 44, the Registrar has grounds for thinking that the audit arranged by the society has been seriously defective, he may order the official auditor to make a fresh audit of the society, and may recover the cost of the audit from the society.

32. *Arbitration.*—When a dispute has been referred to the Registrar under section 54, the Registrar or his nominee shall issue a notice to all parties, and, unless either of the parties desires within 15 days of the issue of such a notice that the matter be referred to arbitration, shall proceed to decide the dispute himself.

When either of the parties desires that the matter be referred to arbitration the Registrar (or his nominee) shall call on each party to nominate its arbitrator within 15 days, and to send a statement signed by the proposed arbitrator about his willingness to serve as an arbitrator. When there are more persons than one on each side, the principal party on each side will have the right to nominate the arbitrator. In such cases the Registrar will decide who is the principal party and his decision shall be final.

Where either of the parties fails to make a nomination within the period aforesaid, the Registrar may nominate an arbitrator on behalf of such party.

The Registrar or his nominee will act as Chairman of the Committee of three Arbitrators. He will fix the date and place of hearing the dispute, and carry on the necessary correspondence in connection with the disposal of the case.

When any dispute is referred to the Registrar's nominee or to three arbitrators for decision and is not decided by them within two months or such further period as the Registrar may allow, the Registrar may decide the dispute himself or refer it again to his nominee for decision.

33. *Registrar may appoint any person to be his nominee for any specified area.*—The Registrar, by special order to be notified in the *Bombay Government Gazette*, may appoint any person to perform the duties of his nominee for disputes arising in any one or more co-operative societies within any area specified in the order, for a period to be specified in the order. Such period shall not ordinarily exceed one year but may be extended by further special order for a further period not exceeding one year in each case.

34. *Payment of expenses of arbitration.*—The Registrar or his nominee and the arbitrators shall have power to order the expenses of determining the disputes to be paid out of the funds of the society, or by such party or parties to the dispute as they may think fit, according to a scale laid down by the Registrar. The Registrar may fix the fees to be paid to his nominee out of the expenses so recovered.

35. *Procedure in arbitration proceedings.*—The Registrar or his nominee shall record a brief note in English or in vernacular of the evidence of the parties and witnesses who attend, and upon the evidence so recorded, and upon consideration of any documentary evidence produced by either side, a decision or award, as the case may be, shall be given in accordance with justice, equity and good conscience, and shall be reduced to writing. If any party duly summoned to attend fails to appear, the dispute may be decided *ex parte*. In cases where three arbitrators are appointed, the opinion of the majority shall prevail. In case of equality of votes, it shall be decided by the Registrar himself.

36. *Appearance by pleaders.*—In proceedings held under rules 32 to 35, no party shall be represented by a legal practitioner.

37. *Execution of arbitration orders in special cases.*—Subject to the provisions of section 59 of the Act, the Registrar may by an order in writing specially authorise any officer of the Co-operative Department not below the rank of a sub-auditor or a supervisor of a Supervising Union to call for and send arbitration orders obtained by any society for execution. The societies in respect of which these powers are to be exercised by the officers so authorised shall be mentioned in the order.

37-A. [*Deleted.*]

38. *Liquidation.*—Where a Liquidator has been appointed under section 47 the following procedure shall be adopted :—

(1) The appointment of the Liquidator shall be notified by the Registrar in the *Bombay Government Gazette*.

(2) The Liquidator shall at once take charge of the books and property and assets of the society and publish by such means as he may think proper a notice requiring all claims against the society to be notified to him within two months

of the publication of the notice. He shall thereafter proceed to take such further action as he is empowered to take under the Act. All liabilities recorded in the account books of a society shall be deemed to have been duly notified to the Liquidator.

(3) The Liquidator shall make separate orders against the various members and past members of the society, noting the amount to be realised from each as a contribution under clause (*d*) of section 50 and as the cost of liquidation under clause (*i*) of the said section. These orders shall be submitted for approval to the Registrar, who may modify them or refer them back to the Liquidator for further inquiry or other action or may forward them for execution under section 59.

(4) If the sum assessed against any member is not recovered, the Liquidator may frame a subsidiary order or orders against any other member or members to the extent of the liability of each for the debts of the society, until the whole amount due from members is recovered, and these orders shall be dealt with in the same way as orders under sub-rule (3).

(5) The Liquidator shall submit a quarterly progress report to the Registrar in such form as the Registrar may require.

(6) All funds in charge of the Liquidator shall be deposited in the Post Office Savings Bank or in a Central Co-operative Bank, or in the Imperial Bank of India and shall stand in his name.

(7) [*Deleted.*]

(8) The Registrar shall fix the amount of fee, if any, to be paid to the Liquidator.

(9) At the conclusion of the Liquidation a general meeting of the members of the society shall be called at which the Liquidator shall summarise his proceedings, point out the causes of the failure of the society, and report what sum, if any, remains in his possession after meeting all the liabilities of the society, as determined under the rules.

39. *Execution of orders.*—Every order passed by the Registrar under section 50A and every order issued under section 55, shall, if not carried out, be executed, in accordance with section 59.

39-A. *Recovery of costs of execution when property is not sold.*—When recovery is made under section 59 in execution of any order referred to in the said section, and the property is not sold in such execution, the Registrar may order the expenses of such recovery to be paid by any party in default according to a sale laid down by him not exceeding in aggregate five per centum of the amount of the dues.

39-B. *Recovery of expenses when recovery of the dues is made through village officers.*—Subject to the provisions of rule 39-A, when recovery is made under section 59 in execution of any order referred to in the said section by village officers the Registrar may order the expenses of such recovery to be paid out of the funds of the society or by such party or parties in default as he may think fit, according to a scale laid down by the Registrar.

40. *Disposal of records of a society whose registration is cancelled.*—(1) When an order directing a society to be wound up is issued under section 47 and no Liquidator is appointed, the officers of the society which is wound up shall, within 15 days of the publication of the order in the *Bombay Government Gazette*, send by registered book post or railway parcel, the records and books of the society to the Assistant Registrar or hand over the same to the local Auditor.

(2) When the affairs of a society for which a Liquidator has been appointed have been wound up and an order cancelling the registration is made under section 49, the Liquidator will forward all the books and records of the cancelled society, and all his own papers and proceedings, by railway parcel to the Assistant Registrar, together with an account of his expenses, showing how the balance has been disposed of, and attaching the receipt of the person to whom it was handed over.

(3) All the books and records of a society whose registration has been cancelled and the proceedings of liquidation shall be destroyed by the Assistant Registrar, after the expiry of two years from the date of the order cancelling the registration of the society.

41. *Interest in liquidation proceedings.*—On any debt, which is due from a society that is being wound up, the creditor may prove for interest up to the date of the Registrar's order for winding up at a rate, which, in the case of the Bombay Provincial Co-operative Bank or a District Central Co-operative Bank or other Co-operative Bank permitted by the Registrar to finance societies, shall be the contract rate, and in other cases shall be a rate to be fixed by the Registrar and not exceeding the contract rate :

Provided that, if any surplus assets remain after all liabilities, including liabilities on shares, have been paid off, further interest on such debts at a rate to be fixed by the Registrar and not exceeding the contract rate may be allowed to creditors from the date mentioned above up to the date of the repayment of the principal.

42. *Service of summonses miscellaneous.*—Summonses issued by the Registrar, or by a person authorised to hold an inquiry or to make an inspection or by the Auditor or Liquidator, or by the Registrar's nominee, under section 58, shall, if sent for service to a Mamlatdar or Mahalkari, be served by such officer.

43. *Fees to be credited to State Government.*—All (fees) fines levied under section 61 and rule 42 shall be credited to the State Government.

44. *Mode of serving summonses.*—(1) A summons issued by any of the officers mentioned in rule 42 may be served personally or through a Mamlatdar, Mahalkari or any member of the Co-operative Department or any Honorary Organiser or Chairman or Secretary of the society or by registered post, acknowledgment paid.

(2) The serving officer shall, in all cases in which summons has been served, endorse or annex, or cause to be endorsed or annexed, on or to the original summons, a return stating the time when, and the manner in which, the summons was served, and the name and address of the person (if any) identifying the person served and witnessing the delivery or tender of the summons.

(3) The person issuing the summons may examine the serving officer on oath, or cause him to be so examined by the Mamlatdar or Mahalkari through whom it is served, and may make such further inquiry in the matter as he thinks fit ; and shall either declare that the summons has been duly served or order it to be served in such manner as he thinks fit.

44-A. *Procedure for the custody of property attached under section 55 of the Act.*—

Attachment of moveable property, other than agricultural produce, in possession of debtor.

(1) Where the property to be attached is moveable property, other than agricultural produce, in the possession of the debtor the attachment shall be made by actual seizure, and the attaching officer shall keep the property in his own custody or in the custody of one of his subordinates, or of a Receiver, if one is appointed under sub-rule (3) and shall be responsible for the due custody thereof :

Provided that, when the property seized is subject to speedy and natural decay, or when the expense of keeping it in custody is likely to exceed its value, the attaching officer may sell it at once.

(2) Where it appears to the officer ordering conditional attachment under section 55 to be just and convenient, he may appoint a Receiver for the custody of the moveable property attached under sub-rule (1); and his duties and liabilities shall be identical with those of a Receiver appointed under Order XL of Schedule I to the Code of Civil Procedure, 1908.

Attachment of immoveable property.

(3) (*i*) Where the property to be attached is immoveable, the attachment shall be made by an order prohibiting the debtor from transferring or charging the property in any way, and all persons from taking any benefit from such transfer or charge.

(*ii*) The order shall be proclaimed at some place on or adjacent to such property by beat of drum or other customary mode, and a copy of the order shall be fixed on a conspicuous part of the prope ty and then upon a conspicuous part of the Village Chawdi, and also where the property is land paying revenue to the State Government, in the office of the Collector of the district and in the office of the Mamlatdar or Mahalkari of the taluka or mahal, in which the land is situate.

45. *Restriction on membership of two credit societies.*—No person being a member of a co-operative credit society or any society dispensing credit, other than a land mortgage bank or a central financing society or a sale society, shall be a member of any other society of a similar type, without the general or special sanction of the Registrar and where a person has become a member of two or moe such societies, any or all such societies shall be bound to remove him from membership upon receiving a written requisition from the Registrar to that effect.

45-A. *Consumers' society not to refuse admission to membership without sufficient cause.*—(1) No Consumers' society shall, without sufficient cause, refuse admission to membership to any person duly qualified therefor under its by-laws.

(2) Any person aggrieved by the decsion of a Consumers' society refusing admission to him to its membership may appeal to the President of the Federal Society to which the said society is affiliated or if it is not affiliated to any Federal Society, to the President of the Bombay Provincial Co-operative Institute.

(3) The decision of the President of the Federal Society or of the Bombay Provincial Co-operative Institute in appeal shall be final.

46. *Societies not to be involved in controversial matters of a religious character.*—No society may take any action which would involve the society in the discussion or propagation of controversial opinions of a religious character, and the Registrar may prohibit any action or rescind any resolution which in his opinion is of such a tendency.

47. *Registrar to keep a record of names, addresses and by-laws of societies.*—The Registrar shall keep a register of the names and addresses of all registered societies and shall record a copy of the registered by-laws and subsequent amendments to the by-laws of such societies.

47-A. *Restriction on being member of Committee.*—(1) A member of a Consumers' society who carries on business of the kind carried on by such society shall not be eligible to be a member of the Committee of such society without the general or special sanction of the President of the Federal Society to which the said society is affiliated, or if it is not affiliated to any Federal Society, of the President of the Bombay Provincial Co-operative Institute.

(2) Where such a person has been elected a member of the Committee of such society without the sanction of the President of the Federal Society or of the President of the Bombay Provincial Co-operative Institute, such person shall cease to be a member of such society upon receipt by the Committee of a written requisition in this behalf from the President of the Federal Society or of the Bombay Provincial Co-operative Institute.

48. (1) Notwithstanding anything contained in the bye-laws of a society, the State Government may, by an order published, with the reasons therefor, in the *Bombay Government Gazette*,—

(*a*) remove all the members of the committee of a society and appoint a new committee in their place, or

(*b*) remove any of the members of the committee of a society and appoint on or more members, as the case may be, in the place of the member or members so removed :

Provided that the number of members of a new committee appointed under clause (*a*) shall not in any case exceed nine :

Provided further that before making such order the State Government shall, except when, in the opinion of the State Government there is an emergency, consult the Bank, if any, financing the society and give an opportunity to the committee or the member or members concerned to show cause why such order should not be made.

(2) When the State Government have appointed a new committee under clause (*a*) of sub-rule (1), the State Government may direct that the members of such committee shall hold office for a period not exceeding three years from the date of their appointment. The member or members appointed under clause (*b*) of sub-rule (1) shall hold office so long only as the member or members, in whose place he is or they are appointed, would have held office, if the vacancy or vacancies had not occurred.

(3) The committee or the members so appointed shall, during the period in which they hold office under sub-rule (2), perform the duties and exercise the powers of the members of the committee of the society.

(4) The bye-laws relating to the meetings of a committee of the society shall apply to the meetings of the new committee appointed under clause (*a*) of sub-rule (1) except that the quorum shall be three.

49. *Issue of proclamation prohibiting private transfers of property.*—(1) The Registrar, Liquidator or Assistant Registrar acting under clause (*a*) or clause (*b*) of sub-section (*1*) of section 59 of the Act shall, at the same time that he signs a certificate affecting any property, issue a proclamation in the form prescribed in Schedule B annexed hereto and, in the case of immoveable property, shall also forward a copy of the proclamation to the Mamlatdar of the taluka in which the property is situated.

(2) The Mamlatdar shall cause an entry about such certificate to be made in the record of Rights.

50. *Transfer of property under section 59A.*—(1) When in execution of an order sought to be executed under section 59 any property cannot be sold for want of buyers, if such property is in the possession of the defaulter, or of some person on his behalf, or of some person claiming it under a title created by the defaulter subsequently to the issue of the certificate by the Registrar, Liquidator or Assistant Registrar under clause (*a*) or (*b*) of sub-section (*1*) of the said section,

the officer conducting the execution shall as soon as practicable report the fact to (*a*) the Court or the Collector, as the case may be, and (*b*) the society which applied for the execution of the said order.

(2) On receipt of a report under sub-rule (1) the society may, within six months from the date of the receipt of the report or within such further period as may for sufficient reasons be allowed in any particular case by the Court or the Collector, as the case may be, submit an application in writing to the Court or the Collector, as the case may be, stating the terms and conditions on which it agrees to take over such property.

(3) On receipt of an application under sub-rule (2), notices shall be issued to the defaulter and to all persons known to be interested in the property, including those whose names appear in the Record of Rights as persons holding any interest in the property, about the intended transfer.

(4) On receipt of such a notice, the defaulter, or any person owing such property, or holding an interest therein by virtue of a title acquired before the date of the issue of a certificate under section 59 may, within one month from the date of the receipt of such notice, deposit with the Court or the Collector, as the case may be, for payment to the society a sum equal to the amount due under the order sought to be executed together with interest thereon and such additional sum for payment of costs and other incidental expenses as may be determined in this behalf by the Court or the Collector, as the case may be.

(5) On failure of the defaulter, or any person interested, or any person holding any interest in the property to deposit the amount, under sub-rule (4), the Court or the Collector, as the case may be, shall direct the property to be transferred to the society on the conditions stated in the certificate in the form prescribed in Schedule C annexed hereto.

(6) The certificate granted under sub-rule (5) shall state whether the property is transferred to the society in full or partial satisfaction of the amount due to it from the defaulter.

(7) If the property is transferred to the society in partial satisfaction of the amount due to it from the defaulter, the Court or the Collector, as the case may be, shall, on the production by the society of a certificate signed by the Registrar, recover the balance due to the society in the manner prescribed in section 59.

(8) The transfer of the property under sub-rule (5) shall be effected as follows :—

(*i*) In the case of moveable property—

(*a*) Where the property is in the possession of the defaulter himself or has been taken possession of on behalf of the Cou t or the Collector it shall be delivered to the Society.

(*b*) Where the property is in possession of some person on behalf of a defaulter, the delive y thereof shall be made by giving notice to the person in possession directing him to give actual peaceful possession to the society, and prohibiting him from delivering possession of the property to any other person.

(*c*) The property shall be delivered to a person authorised by the society to take possession on behalf of the society.

(*ii*) In the case of immoveable property—

(*a*) Where the property is a growing or standing crop, it may be delivered to the society before it is cut and gathered and the society shall be entitled to enter on the land, and to do all that is necessary for the purpose of tending and cutting and gathering it.

(*b*) Where the property is in the possession of the defaulter or of some person on his behalf or some person claiming under a title created by the defaulter subsequent to the issue of a certificate under section 59, the Court or the Collector, as the case may be, shall order delivery to be made by putting the society or any person whom the society may appoint to receive delivery on its behalf in actual possession of the property and if need be by removing any person who illegally refuses to vacate the same, after holding an enquiry as provided in rules 13A to 13C of the rules regulating execution of decrees transferred to the Collector under section 68 of the Code of Civil Procedure, 1908.

(*c*) Where the property is in the possession of a tenant or other person entitled to hold the same by a title acquired before the date of issue of a certificate under section 59, the Court or the Collector, as the case may be, shall order delivery to be made by affixing a copy of the certificate of transfer of the property to the society in some conspicuous place on the property and proclaiming to such person by beat of drum or other customary mode at some convenient place, that the interest of the defaulter has been transferred to the society.

(9) The society shall be required to pay expenses incidental to sale including the cost of maintenance of live-stock, if any, according to such scale as may be fixed by the State Government from time to time.

(10) Where land is transferred to the society under clause (*ii*) (*a*) of sub-rule (8) before a growing or standing crop is cut and gathered the society shall pay the current year's land revenue on the land.

(11) The society shall forthwith report any transfer of property under clause (*ii*) (*b*) or (*c*) of sub-rule (8) to the village accountant for information and entry in the record of rights.

(12) The society to which property is transferred under sub-rule (5) shall maintain for each such defaulter a separate account showing all the expenses incurred including payment of outside encumbrances, land revenue and other dues on the property and all the income derived from it.

(13) The society to which property is transferred under sub-rule (5) shall use its best endeavour to sell the property as soon as practicable to the best advantage of the society as well as that of the defaulter, the first option being always given to the defaulter who originally owned the property. The sale shall be subject to confirmation by the Assistant Registrar. The proceeds of the sale shall be applied to defraying the expenses of the sale and other expenses incurred by the society and referred to in sub-rules (9) and (12) and to the payment of the arrears due by the defaulter under the order in execution, and the surplus (if any) shall then be paid to the defaulter.

(14) Until the property is sold, the society to which the property is transferred under sub-rule (5) shall use its best endeavours to lease it or to make any other use that can be made of it so as to derive the largest possible income from the property.

(15) When the society to which property is transferred under sub-rule (5) has realized all its dues under the order in execution of which the property was transferred from the proceeds of management of the property, the property, if unsold, shall be restored to the defaulter.

51. *Officer before whom statements under section 64G may be signed.*—The officer before whom the statements of owners referred to in clause (*d*) of section 64G may be signed shall be such officer as may be authorised by the Registrar in this behalf.

SCHEDULE A.

(*See* rule 2.)

Form of Application for Registration of a Society.

1. Name of proposed Society

2. Address to be registered

3. Is liability limited or unlimited

4. Area of operations

5. Objects of the Society

6. If the capital is to be raised by shares, what is the number and value of shares which it is proposed to issue

7. In other cases, what is the amount of the capital it is proposed to raise by loan or deposit

7-A. The amount of preliminary expenditure incurred by the promoters till the date of the application and the estimate of expenditure likely to be incurred by them thereafter with a view to getting the society registered

8. Language in which the books and accounts will be kept

9. With this application for registration are sent three copies of the proposed by-laws signed by the applicants (not less than ten).

(Signatures)

Name and father's name.	Age.	Caste.	Profession.	Place of residence, village and taluka.

SCHEDULE AA.

(*See* rule 6-B.)

Form of notice to persons other than share-holders and creditors of a society whose interests will be affected by the division of a society.

Notice is hereby given, pursuant to section 15A (*2*) of the Bombay Co-operative Societies Act, 1925, by the
Society Limted registered under No. dated the
and having its registered office at
to all persons concerned that the society proposes to divide itself into (1) society
and (2) society
and a preliminary resolution to that effect has been passed at a special general meeting of the society held on
The assets and liabilities of the said societies, their areas of operation and the members, who will constitute each of these societies on division, are given in the schedule mentioned below :—

Schedule.

Particulars of (1) Society :—

(1) Assets and liabilities.

(2) Area of operation.

(3) Names of members.

Particulars of (2) Society :—

(1) Assets and liabilities.

(2) Area of operation.

(3) Names of members.

Any person whose interests are affected by the proposed division, may send his objections, if any, to the office of the Society within 10 days from the date of this notice.

Dated 19 .

Secretary,
By order of the Board/Managing Committee.

SCHEDULE B.

Form of proclamation to be issued prohibiting any private transfer or delivery of or encumbrance or charge on the property made or created after the issue of a certificate under section 59.

A. In the case of immovable property—

Whereas society has obtained an award or awards under section 54 or an order or orders of liquidator under section 50 of the Bombay Co-operative Societies Act, 1925, for an amount of Rs. against and proposes to execute the same by sale of the undermentioned property of the said defaulter or defaulters and whereas the said society has obtained a certificate dated the for execution of the award or the order, as the case may be, under section 59 of the said Act notice is hereby given that any private transfer or delivery of or encumbrance or charge on the property made or created after the issue of the certificate shall be null and void as against the said society.

Description of property.

Date of award or order.	Names of the parties against whom award or order has been passed and certificate under section 59 has been issued.	Survey No.	Area.	Assessment.	Remarks.

The notice shall be proclaimed at some place on or adjacent to such property by beat of drum or other customary mode, and a copy of the said notice shall be fixed on a conspicuous part of the property and then upon a conspicuous part of the village chavdi, and also where the property is land paying revenue to the State Government, in the office of the Collector of the district in which the land is situate.

B. In the case of moveable property a similar notice may be given with necessary change as to the description of the property. A copy of the notice shall be delivered to the defaulter.

SCHEDULE C.

FORM OF CERTIFICATE FOR TRANSFER OF PROPERTY UNDER SECTION 59A.

[*See* Rule 50 (5).]

In the case of immovable property.

Whereas in execution of the award or awards passed under section 54 or an order or orders made by a liquidator under section 50, of the Bombay Co-operative Societies Act, 1925, in favour of the
Society an order was made on the day of 19 for the sale of the undermentioned property of the person or persons (defaulter or defaulters) and whereas the Court or the Collector is satisfied that the said property cannot be sold for want of buyers.

It is hereby ordered under sub-section (*1*) of section 59A of the said Act that the right, title and interest of the defaulter shall vest in the said society and shall be delivered to the society subject to the terms and conditions laid down in the Schedule hereto annexed.

Description of the property.

Survey No.	Area and assessment.	Nature of right, title and interest of the defaulter.	Details of encumbrances to which property is subject.

The said property is transferred to the society in $\frac{\text{full}}{\text{partial}}$ satisfaction of the amount due to it from the defaulter.

Given under my hand and the seal of the Court or Collector this day of 19 .

Court or Collector.

In the case of moveable property.

(The form will be similar with necessary changes as regards the description and the delivery of the property.)

G. N., R. D., No. 9114/45, dated 14th September 1948 (B. G., Pt. IV-B, p. 811).

S. 71. Bombay Co-operative Tribunal Rules, 1948.

In exercise of the powers conferred by section 71 of the Bombay Co-operative Societies Act, 1925 (Bom. VII of 1925), the Government of Bombay is pleased to make the following additional rules, namely :—

1. These rules may be called the Bombay Co-operative Tribunal Rules, 1948.

2. In these rules, unless there is anything repugnant in the subject or context,—

(*a*) "member" means a member of the Tribunal and includes the President thereof;

(*b*) "non-official" means a person who at the date of his appointment as member does not hold any office of profit under the Government of India, or the Government of any State.

3. The Tribunal shall consist of a President and two other members.

4. (1) The President shall be a person who has been a Judge of any High Court of Judicature in India or is a retired District Judge, or a person who has held the office of the Registrar of Co-operative Societies under any State Government in India.

(2) The other two members shall be non-officials closely associated with the Co-operative Movement and at least one of these two shall be a lawyer with a standing of not less than ten years.

5. (1) The President and the members shall hold office ordinarily for a period of five years.

(2) A person who has held office as the President or a member for a period mentioned in sub-rule (1) shall be eligible for reappointment.

(3) The President or a member may at any time resign his office.

6. Notwithstanding anything contained in rule 5, the State Government may terminate at any time the appointment of the President or a member, if, in its opinion, such President or member is unable or unfit to continue to perform the duties of his office.

7. (1) If any vacancy occurs by leave of absence, deputation, death, resignation, expiry of the period of appointment, termination of the appointment or for any other cause whatsoever, such vacancy shall be filled by a person qualified for appointment under rule 4.

(2) Until the vacancy in the office of the President is filled under sub-rule (1), the senior-most member shall act as the President.

8. The headquarters of the Tribunal shall be at Bombay or at such other place as may hereafter be notified by Government in the *Official Gazette*.

APPENDIX A.

Bom. Co-opt. T., No. 9114/45-II, dated 21st June 1949 (B. G., Pt. IV-C, p. 538).

S. 63-A (4) Bombay Co-operative Tribunal Regulations, 1949.

The following regulations made by the Bombay Co-operative Tribunal constituted under section 63-A of the Bombay Co-operative Societies Act, 1925 (Bom. VII of 1925), in exercise of the powers conferred on it by sub-section (*4*) of the said section 63-A and with the previous sanction of the Government of Bombay, are hereby published as required by sub-section (*5*) of the said section :—

REGULATIONS.

CHAPTER I.

General.

1. *Short title.*—These regulations may be called the Bombay Co-operative Tribunal Regulations, 1949.

2. *Definitions.*—In these regulations, unless there is anything repugnant in the subject or context,

(*a*) "Act" means the Bombay Co-operative Societies Act, 1925;

(*b*) "appeal" means a memorandum of appeal to the Tribunal filed under section 56 of the Act;

(*c*) "application for revision" means an application for revision made to the Tribunal for the exercise of its powers under section 54-A or sub-section (*6*) of section 63-A of the Act;

(*d*) "form" means a form appended to these regulations;

(*e*) "legal representative" means a person who in law represents the estate of a deceased person and includes any person decided by the Tribunal to represent the deceased person in the proceedings pending before the Tribunal, unless and until a competent court has decided otherwise;

(*f*) "pleader" means a pleader as defined in section 2 (*15*) of the Code of Civil Procedure, 1908;

(*g*) "President" means the President of the Tribunal;

(*h*) "Registrar of the Tribunal" includes a person who is for the time being discharging the functions of the Registrar of the Tribunal;

(*i*) "Rules" means the Bombay Co-operative Societies Rules, 1927, and the word "rule" shall be construed accordingly;

(*j*) "Tribunal" means the Bombay Co-operative Tribunal constituted under section 63-A of the Act;

(*k*) Words and expressions used but not defined in these regulations shall have the meanings assigned to them in the Act and the Rules.

CHAPTER II.

Sittings and Office hours.

3. *Place of hearing.*—(1) The headquarters of the Tribunal shall be at Bombay.

(2) All appeals and applications for revision shall ordinarily be heard at Bombay:

Provided that the Tribunal may, by reason of the great number of such appeals or applications in respect of any area or for any other reason, hear them at any other convenient place in the State of Bombay.

(3) Sufficient notice about the sitting of the Tribunal outside Bombay shall be given by publication on the notice board of the Tribunal and in any two newspapers having circulation at the place where the sitting is to be held.

4. *Notice of date of hearing.*—The Registrar of the Tribunal shall, with the approval of the President, arrange for the sittings of the Tribunal for hearing the appeals and applications for revision and publish the dates fixed for the hearing thereof on the notice board of the Tribunal sufficiently in advance.

5. *Office hours.*—The office of the Tribunal shall observe the same office hours as the other offices of the State Government. It shall remain closed on Sundays and such holidays as may be declared by Government for such offices.

CHAPTER III.

Presentation, registration and admission of appeals and applications.

6. *Presentation of appeals and applications.*—(1) An appeal or an application for revision shall be presented in person by the appellant or applicant, as the case may be, or by his duly appointed agent, to the Registrar of the Tribunal during office hours or sent to him by registered post.

(2) When such appeal or application is presented by an agent, it shall be accompanied by a letter of authority appointing him as such, and bearing the prescribed stamp.

(3) Every such appeal or application shall be made in accordance with the provisions of the Act, the Rules and these Regulations.

(4) Every appeal or application shall be accompanied by one certified copy and two uncertified copies of the order complained of and by three copies of the appeal or application, unless the production of any of the copies is dispensed with by the President.

(5) Every appeal or application shall specify the name and address of the appellant or the applicant and also the names and the addresses of the respondents or the opponents, as the case may be.

7. *Registration of appeals and applications.*—(1) On receipt of an appeal or an application for revision, the Registrar of the Tribunal shall endorse on it the date of its receipt by him. The Registrar shall, as soon as possible, examine it and on satisfying himself—

(*i*) that the person presenting it has authority to do so ;

(*ii*) that it is made within the prescribed time, if any ; and

(*iii*) that it conforms to all the provisions of the Act, the Rules and these regulations,

shall cause it to be registered in the appropriate register maintained under regulation 8.

(2) If the Registrar of the Tribunal finds that the appeal or application presented to him does not conform with any of the said provisions, he shall make a note on the appeal or application to that effect and may call upon the party concerned or his agent to remedy the defects within a period of seven days of the receipt of notice to do so. The Registrar may, for good cause, extend the period for the purpose of remedying the defects, provided that if the extension of more than seven days in the aggregate is sought, the Registrar shall place the matter before the President and obtain his orders in that behalf.

(3) If the defect is remedied within the period allowed under sub-regulation (2), the Registrar shall cause the appeal or application, as the case may be, to be registered in the appropriate register.

(4) If the party concerned or his agent fails to remedy the defects within the said period, the Registrar shall report to the Tribunal and, with the approval of the President, fix a date for the hearing, of which due notice shall be given to the party or his agent.

(5) On the date so fixed the Tribunal shall go through the relevant papers, hear the party or his agent, if present, and pass suitable orders directing that the appeal or application be registered or rejecting it. Where the appeal or application is rejected, the Tribunal shall record its reasons for doing so.

(6) When an appeal or application has been ordered to be registered under this regulation, the Registrar shall see that it is registered as soon as practicable and in any case not later than seven days from the date of the order requiring it to be registered.

8. *Maintenance of registers.*—The Registrar of the Tribunal shall maintain separate registers for—

(*i*) appeals in Form A ; and

(*ii*) applications for revision in Form B.

9. *Intimation to the Registrar of the Co-operative Societies.*—When any appeal or application has been registered under regulation 7, the Registrar of the Tribunal, shall, as soon as may be, send an intimation thereof in Form C to the Registrar of the Co-operative Societies calling for the record and proceedings relating to such appeal or application, unless the papers are already in the office of the Tribunal.

10. *Admission.*—(1) On receipt of the record and proceedings of the appeal or application, as the case may be, the President shall go through the papers, and if he is of the opinion that there is substance in the appeal or application, he shall admit it.

(2) If the President is of the opinion that there is no substance in the appeal or application he may direct (*a*) that it be placed before the Tribunal for preliminary hearing on a date to be fixed by him, of which notice shall be given to the appellant or applicant or (*b*) that the papers be circulated among the members of the Tribunal with a view to ascertain their opinion, whether the appeal or application should be admitted or not. The appeal or the application shall be admitted or rejected in accordance with the opinion of the majority of the Tribunal, provided that no appeal or application shall be rejected unless an opportunity has been given to the appellant or the applicant, as the case may be, to represent his case before the Tribunal. If the appeal or application be rejected, the Tribunal shall give reasons for doing so.

(3) A notice under sub-regulation (2) shall declare that if the party does not appear before the Tribunal either in person or through agent on the date mentioned in the notice the appeal or application, as the case may be, shall be heard and decided *ex parte*.

CHAPTER IV.

Hearing, Adjournment and Judgment.

11. *Notice to Respondent or Opponent.*—After an appeal or application for revision has been admitted, a notice shall be delivered or sent by registered post to the respondent or opponent calling upon him to appear before the Tribunal on the date specified in the notice. The notice shall also declare that if he does not

appear before the Tribunal either in person or through an agent on the date specified in the notice or on any subsequent date to which the hearing may be adjourned, the Tribunal shall hear and decide the appeal or the application *ex parte*.

12. *Procedure at the hearing.*—On the date fixed or on any other day to which the hearing may be adjourned, the appellant or applicant or his agent, or if permitted by the Tribunal his pleader shall ordinarily be heard first in support of his appeal or application. The respondent or the opponent or his agent or if permitted by the Tribunal his pleader, shall, if necessary, he heard next ; and in such case the appellant or applicant or his agent or his pleader (if permitted) shall be entitled to reply.

13. *Hearing in the absence of the parties.*—(1) If, on the date fixed for hearing or on any other day to which the hearing may be adjourned, the appellant or the applicant does not appear either in person or by his agent or pleader (if allowed), when the appeal or application is called for hearing, the Tribunal may dismiss the appeal or application or may decide it on merits, after hearing the respondent or opponent or his agent (or pleader if permitted), if present.

(2) If, on the day fixed for hearing or on any other day to which the hearing may be adjourned. the respondent or opponent does not appear either in person or through his agent or pleader (if permitted) when the appeal or application is called for hearing, the Tribunal may decide the same on merits, after hearing the appellant or applicant or his agent or pleader (if permitted), if he be present.

14. *Restoration of appeals and applications decided ex parte.*—If any of the parties was absent at the date of the hearing, either preliminary or final, and the appeal or application was heard and decided *ex parte*, the party concerned may apply for restoration of the appeal or the application, and if the party satisfies the Tribunal that he had no notice of the date of hearing or that he was prevented from any sufficient cause from appearing when the appeal or application was called for hearing, the Tribunal may restore the appeal or application to its file, provided that where the other party had appeared in the appeal or application, such party shall be given notice and an opportunity of being heard before the order for restoration of the appeal or application is made.

15. *Fresh evidence and witnesses.*—(1) No party to an appeal or an application for revision shall be entitled to adduce fresh evidence, whether oral or documentary, before the Tribunal. The Tribunal may accept documents tendered by a party or call for them, if it is of opinion that they are necessary for deciding the appeal or application, provided that the other party shall in that case be entitled to produce rebutting evidence.

(2) If the Tribunal is of opinion that any witness should be examined, it may, instead of examining him before itself, ask the Registrar of the Co-operative Societies to do so personally or through a Gazetted officer subordinate to him.

(3) Where fresh evidence has been adduced under sub-regulation (1) or a witness has been examined as provided in sub-regulation (2), the parties, may, if they so desire, address the Tribunal on points arising out of the fresh evidence or the deposition of the witness.

16. *Adjournment.*—The Tribunal may on such terms as it thinks fit, and at any stage, adjourn the hearing of any appeal or application.

17. *Procedure in case of death of one of the several appellants or applicants or of sole appellant or applicant.*—If an appellant or applicant dies, while the appeal or application is pending and it cannot be proceeded with unless his legal representative is made a party to the appeal or application, the Tribunal shall adjourn further

proceedings to enable his legal representative to appear and apply for being made a party. If the legal representative fails to do so within 90 days from the date on which the appellant or applicant dies, the appeal or the application shall abate as regards the deceased, and if he be the sole appellant or applicant the appeal or application shall be dismissed. Otherwise it shall be proceeded with as regards the remaining appellants or applicants.

18. *Procedure in case of death of one of several respondents or opponents or of sole respondent or opponent.*—If a respondent or opponent dies while the appeal or application is pending, and it cannot be proceeded with unless his legal representative is made a party to the appeal or application, the appellant or the applicant shall apply to the Tribunal for making the legal representative of such respondent or opponent a party to the appeal or application within 90 days from the date on which the respondent or opponent died. If the appellant or applicant fails to do so, the appeal or application shall abate as regards the deceased. If the deceased be the sole respondent or opponent, the appeal or application shall be dismissed. Otherwise, it shall be proceeded with as regards the remaining respondents or opponents.

19. *No abatement by reason of death after hearing.*—Notwithstanding anything contained in regulations 17 and 18, there shall be no abatement by reason of the death of any party, between the conclusion of the hearing and the pronouncing of the judgment; but the judgment may in such case be pronounced notwithstanding the death, and shall have the same force and effect as if it had been pronounced before the death took place. No legal representative need be made party in such case.

20. *Determination of legal representative.*—If a question arises in any appeal or application whether a person is or is not the legal representative of a deceased party, such question may be determined by the Tribunal in a summary way after taking evidence, if necessary.

21. *Procedure in case of assignment.*—In any case where the business of a party to an appeal or application before the Tribunal is, during the pendency of it, assigned or devolves wholly or in part to or upon some other person or Society, the appeal or application may, by leave of the Tribunal, be continued by or against such person or Society.

22. *Procedure in case of insolvency.*—If a party to an appeal or application, becomes insolvent and his estate becomes vested in the assignee or receiver, the latter may, by leave of the Tribunal, be made a party to the appeal or application.

23. *Abatement or dismissal for failure of legal representative, etc., to apply in time may be set aside.*—A person claiming to be the legal representative of a deceased appellant or applicant or the assignee or receiver of an insolvent appellant or applicant may apply, within 60 days from the date of abatement or dismissal of the appeal or application, to have the abatement or dismissal set aside, and if it is proved to the satisfaction of the Tribunal that he was prevented by sufficient cause from appearing within time, the abatement or dismissal shall be set aside by the Tribunal and the appeal or application proceeded with.

24. *Tribunal.*—Every appeal or application for revision shall be heard by all the members of the Tribunal sitting together; but any interlocutory application in such appeal or application may be heard by one or more members of the Tribunal who may be present.

25. *Pronouncement of judgment.*—(1) When the hearing of an appeal or application is complete, the Tribunal shall pronounce its judgment forthwith or shall fix a date for the same. Such dates shall be notified on the notice board of the Tribunal.

(2) Every judgment of the Tribunal shall be in writing.

26. *Unanimous or majority judgment.*—Where the judgment is unanimous, it shall be signed by all the members and pronounced by the President in open Court. Where it is a judgment of the majority, it shall be similarly signed by the members forming the majority and pronounced by the senior member among them. The dissenting member may also write his judgment and record his opinion on the point or points on which he dissents. If the dissenting member does not write his judgment separately, he shall state below the judgment of the majority that he dissents and sign an endorsement to that effect. Whether the dissenting member complies with the foregoing provisions or not, the judgment of the majority shall operate as the judgment of the Tribunal.

27. *Certain matters to be specified in the judgment.*—The Tribunal shall, in its judgment, state at the end, whether the appeal or application is dismissed or allowed wholly or in part and mention the relief, if any, granted to the appellant or applicant.

28. *Costs.*—(1) The costs of the appeal or application shall be in the discretion of the Tribunal.

(2) In its final order the Tribunal shall state who shall bear the costs and in what proportion, if any.

(3) A bill of costs shall be drawn up by the Registrar of the Tribunal in Form D, and attached to the judgment.

29. *Supply of certified copies of judgment to the Registrar of the Co-operative Societies and the parties concerned.*—A certified copy of every judgment of the Tribunal shall be forwarded to the Registrar of the Co-operative Societies as soon as practicable. Certified copies of it shall also be supplied free of cost and on application to the parties concerned.

CHAPTER V.

Miscellaneous.

30. *Appearance of pleaders.*—Pleaders shall not ordinarily be entitled to appear in proceedings before the Tribunal. They may, however, be permitted by the Tribunal to do so having regard to the nature or other circumstances of a particular case.

31. *Period for entertaining revision application.*—The Tribunal shall not ordinarily entertain applications for revision made after 60 days from the date of the order complained of (after excluding the time required for obtaining a certified copy thereof) but it may in special cases entertain an application beyond the period mentioned above.

32. *Copies of documents on payment of fees.*—(1) Any party to the appeal or application before the Tribunal may apply to the Registrar of the Tribunal for a certified copy of any document (including the judgment) in the record of the appeal or application to which he is a party.

(2) The application shall be accompanied by deposit of an amount to cover the cost of preparing copies, according to the following scale of copying fees, *namely* :—

(*a*) for the first 200 words or less—

English	.. ..	12 as.
Vernacular	.. ..	6 as.

(*b*) For every additional 100 words or fraction thereof—

English	.. ..	6 as.
Vernacular	.. ..	3 as.

A uniform extra fee of rupee 1 shall be charged on an application for copies required urgently. The amount calculated according to the above scale, shall be retained by the Registrar as copying fees and the surplus amount, if any, deposited by the party shall be refunded to him at the time of supplying the copy, provided that the party shall, if the amount deposited by him is not sufficient to cover the copying fees, pay the deficit before taking delivery of the copy.

(3) If the Registrar of the Tribunal feels any doubt about the propriety of granting a copy of any such document, he shall place the application before the President and act in accordance with the orders of the President.

(4) Persons who are not parties to an appeal or application may be supplied with a copy of any such document only under the orders of the President and on payment of the copying fees.

33. *Forms of notices.*—Forms E to I with suitable modifications shall be used for the purpose of notices to be issued by the Tribunal.

34. *Service of notices in general.*—(1) The notices issued by the Tribunal to the party under the Act or these regulations shall be served by any of the following methods, viz. :—

(*i*) by delivery to the addressee or his agent personally of a copy of the notice after taking his signature on the original in token of receipt or (*ii*) by registered post (acknowledgment due). An acknowledgment containing the signature of the addressee or his agent or an endorsement by the postal authorities to the effect that the notice was refused by the addressee shall, unless the contrary is proved, be deemed to be sufficient to hold that the notice was duly served.

(2) Where the Tribunal is satisfied that the addressee is evading service or that it is not possible to serve the notice in the ordinary way, it may direct that a copy of the notice should be affixed on its notice board and another copy on the outer door or some other conspicuous part of his present or last actual residence and a conspicuous place in the village or town where he last resided or carried on business or by publishing the notice in a newspaper which has circulation in the locality.

(3) Where the Tribunal directs service of notice otherwise than by post, it may be sent for service to the Mamlatdar or Mahalkari of the Taluka or Petha within whose jurisdiction the party to be served resides. The Mamlatdar or Mahalkari, as the case may be, shall have the notice served through the village officers and return it to the Registrar of the Tribunal with an endorsement regarding the manner of service as laid down in sub-rule (2) of rule 44 of the Bombay Co-operative Societies Rules, 1927.

FORM A.

(*See* Regulation 8.)

THE BOMBAY CO-OPERATIVE TRIBUNAL, BOMBAY.

Register of Appeals.

Serial No.	Names of parties and their pleaders or agents, if any.	Date of the decision under appeal.	Date of filing the appeal.	Date of appearance of the respondent, his pleader or his agent.
1	2	3	4	5

Date of decision by the Tribunal.	Final order passed by the Tribunal.	Whether decided unanimously or by majority.	Remarks.
6	7	8	9

FORM B.

(*See* Regulation 8.)

THE BOMBAY CO-OPERATIVE TRIBUNAL, BOMBAY.

Register of applications for revision.

Serial No.	Names of parties and their pleaders or agents, if any.	Date of the decision sought to be revised.	Date of filing the application or the order of the Tribunal calling for record.	Date of appearanc of the oppónent, his pleader or his agent.
1	2	3	4	5

Date of decision by the Tribunal.	Final order passed by the Tribunal.	Whether decided unanimously or by majority.	Remarks.
6	7	8	9

FORM C.

(*See* Regulation 9.)

BEFORE THE BOMBAY CO-OPERATIVE TRIBUNAL.

$\frac{\text{Appeal}}{\text{Application}}$ No. of 19 .

$\frac{\text{Appellant.}}{\text{Applicant.}}$

versus

$\frac{\text{Respondent.}}{\text{Opponent.}}$

To

The Registrar of Co-operative Societies,
Bombay State, Poona.

Please take note that the abovenamed $\frac{\text{appellant}}{\text{applicant}}$ has filed an $\frac{\text{appeal}}{\text{application for revision}}$ before this Tribunal against the decision in No. of 1949 (of the file of).
You are requested to send the record and proceedings of the above $\frac{\text{appeal}}{\text{application}}$ with all practicable despatch.

Given under my hand and the seal of the Tribunal.

Date

By order,

Seal.

Registrar,

MO-I Bk H 160—37

FORM D.

(*See* Regulation 28.)

BILL OF COSTS (TO BE ATTACHED TO THE JUDGMENT).

Bombay Co-operative Tribunal $\frac{\text{Appeal}}{\text{Application}}$ No. of 1949.

$\frac{\text{Appellant.}}{\text{Applicant.}}$

versus

$\frac{\text{Respondent.}}{\text{Opponent.}}$

By the $\frac{\text{Appellant}}{\text{Applicant.}}$	By the $\frac{\text{Respondent.}}{\text{Opponent.}}$

Prepared by (Date) By order,

Clerk Registrar.

Examined

Seal.

Clerk

FORM E.

(*See* Regulation 33.)

BEFORE THE BOMBAY CO-OPERATIVE TRIBUNAL.

Appeal / Application No. of 19

Appellant. / Applicant.

versus

Respondent. / Opponent.

To

The abovenamed Appellant. / Applicant.

You have filed an appeal / application for revision against the order of the in No. of 19 of his file. It does not comply with provisions of the Bombay Co-operative Societies Act, 1925, and the rules and regulations made thereunder in the following respects :—

2. You are hereby required to remedy the defects within 7 days of the receipt of this notice by you. If you fail, the matter will be placed for orders before the Tribunal.

Given under my hand and the seal of the Tribunal.

By order,

(Date) Registrar.

Seal.

FORM F.

(*See* Regulation 33.)

BEFORE THE BOMBAY CO-OPERATIVE TRIBUNAL.

$\frac{\text{Appeal}}{\text{Application}}$ No. of 19

$\frac{\text{Appellant.}}{\text{Applicant.}}$

versus

$\frac{\text{Respondent.}}{\text{Opponent.}}$

To

The abovenamed $\frac{\text{Appellant.}}{\text{Applicant.}}$

Take notice that the $\frac{\text{appeal}}{\text{application for revision}}$ filed by you against the decision of..... in.....No.....of 19....., of the file of.....has been placed before the Tribunal for orders as it is defective as already intimated to you. The Tribunal will hear the matter on..... If you want to be heard, you should be present at the time of the hearing in person or through duly appointed agent. If you fail to do so, the Tribunal will pass suitable orders in your absence.

Given under my hand and the seal of the Tribunal.

By order,

(Date) Registrar.

Seal.

FORM G.

(*See* Regulation 33.)

BEFORE THE BOMBAY CO-OPERATIVE TRIBUNAL.

$\frac{\text{Appeal}}{\text{Application}}$ No. of 19

... $\frac{\text{Appellant.}}{\text{Applicant.}}$

versus

... $\frac{\text{Respondent.}}{\text{Opponent.}}$

To

The abovenamed $\frac{\text{Appellant.}}{\text{Applicant.}}$

Take notice that the above $\frac{\text{appeal}}{\text{application for revision}}$ has been set down for hearing by the Tribunal on.....to decide whether the $\frac{\text{appeal}}{\text{application}}$ should be admitted or not, and that you should attend on that day personally or through your duly appointed agent. On your failure to do so, the Tribunal will hear and decide the appeal/application *ex parte*.

Given under my hand and the seal of the Tribunal.

(Date)

Seal.

By order,

Registrar.

FORM H.

(*See* Regulation 33.)

BEFORE THE BOMBAY CO-OPERATIVE TRIBUNAL.

$\frac{\text{Appeal}}{\text{Application}}$ No. of 19

... $\frac{\text{Appellant.}}{\text{Applicant.}}$

versus

... $\frac{\text{Respondent.}}{\text{Opponent.}}$

To

The abovenamed $\frac{\text{Respondent.}}{\text{Opponent}}$.

Take notice that the abovenamed $\frac{\text{Appellant}}{\text{Applicant}}$ has filed an $\frac{\text{Appeal}}{\text{Application for revision}}$ before this Tribunal $\frac{\text{against the decision of}}{\text{against the order of the Tribunal in the}}$ abovementioned $\frac{\text{No.}}{\text{Appeal/Application}}$ of his file, and that the Tribunal has fixed..... as the date for hearing. The Tribunal will hear it on that day or on a subsequent date to which it may adjourn it, after notifying the date on the notice board.

If you do not appear on the above date or dates, personally or through duly appointed agent, the Tribunal will hear and decide the $\frac{\text{appeal}}{\text{application}}$ *ex parte*.

Given under my hand and the seal of the Tribunal.

(Date)

By order,

Seal.

Registrar.

FORM I (GENERAL).

(*See* Regulation 33.)

BEFORE THE BOMBAY CO-OPERATIVE TRIBUNAL.

$\frac{\text{Appeal}}{\text{Application}}$ No. 19 .

... $\frac{\text{Appellant.}}{\text{Applicant.}}$

versus

... $\frac{\text{Respondent.}}{\text{Opponent.}}$

To

The

This is to give you notice that

Given under my hand and the seal of the Tribunal.

(Date)

By order,

Registrar.

Seal.

THE BOMBAY MUNICIPAL BOROUGHS ACT, 1925 (BOM. XVIII OF 1925).

G. N., G. D., No. 522, dated 7th July 1930 (B. G., Pt. I, p. 1736). S. 69

In exercise of the powers conferred by section 69 of the Municipal Boroughs Act, 1925 (Bom. XVIII of 1925), the Government of Bombay is pleased to declare that the centres opened by Government at the Haffkine Institute, Parel, Bombay, and at the Civl Hospitals, * * * Poona, Ahmednagar, Belgaum, Ahmedabad, Karwar, Surat, Jalgaon, Nasik, Sholapur and Ratnagiri are suitable institutions for anti-rabic treatment for the purpose of the said section.

G. N., G. D., No. 7044, dated 16th August 1928 (B. G., Pt. I, p. 1714). S. 70

In exercise of the powers conferred by section 70 of the Bombay City Municipalities Act, 1925 (Bom. XVIII of 1925), the Government of Bombay are pleased to declare the Parvatibai Leper Infirmary at Surat to be a suitable Leper Asylum for the maintenance and treatment of lepers.

G. N., G. D., No. 9114, dated 3rd April 1934 (B. G., Pt. I-A, p. 234). S. 70

In exercise of the powers conferred by section 70 of the Bombay Municipal Boroughs Act, 1925 (Bom. XVIII of 1925), the Government of Bombay (Transferred Departments) are pleased to declare the asylums, hospitals and houses mentioned in column 2 of the schedule hereto annexed to be suitable for the maintenance and treatment of lepers, resident within, or under any enactment for the time being in force removed from, the municipal boroughs shown against each in column 1 thereof :—

Schedule.

Name of Municipal Borough.	Name of the asylum, hospital or house declared to be suitable for the maintenance and treatment of lepers resident within, or removed from. the municipal boroughs shown against each in column 1.
	2
(1) Ahmedabad .. .. (2) Nadiad ..	Kagrapeth Leper Asylum, Ahmedabad.
(1) Broach .. .. (2) Surat	Parvatibai Leper Infirmary, Surat.
All municipal boroughs in the State of Bombay.	Acworth Leper Asylum, Matunga, Bombay.
(1) Nasik .. .. (2) Poona City .. .. (3) Poona Suburban .. .. (4) Lonavla	Leper Asylum, Nasik.

Name of Municipal Borough.	Name of the asylum, hospital or house declared to be suitable for the maintenance and treatment of lepers resident within, or removed from, the municipal boroughs shown against each in column 1.
1	2
(1) Sholapur (2) Pandharpur (3) Poona City (4) Poona Suburban (5) Lonavla (6) Ahmednagar (7) Jalgaon (8) Bhusawal (9) Amalner (10) Chalisgaon (11) Dhulia (12) Satara City	Leper Asylum, Sholapur.
(1) Poona City (2) Poona Suburban (3) Lonavla (4) Jalgaon (5) Bhusawal (6) Amalner (7) Chalisgaon (8) Satara City	Kondhwa Leper Asylum, Poona District.
(1) Bandra (2) Kurla	Edalji Framji Allbless Leper Home, Trombay, Bombay Suburban District.
(1) Belgaum (2) Bijapur (3) Dharwar (4) Hubli (5) Gadag Betigeri	Leper Asylum, Hindalge, district Belgaum.
Ratnagiri	Sir Dinshaw Manekji Petit Leper Asylum, Ratnagiri.

* * * * *

S. 179 (1) **G. N., G. D., No. 3896, dated 22nd March 1929 (B. G., Pt. I-A, p. 44).**

In exercise of the powers conferred by sub-section (*1*) of section 179 of the Bombay City Municipalities Act, 1925 (Bombay XVIII of 1925), and in supersession of Government Notification in the General Department noted below the Government of Bombay are pleased to confer on the municipalities specified in the schedule hereto all the powers specified in clauses (*a*) to (*k*) of sub-section (*2*) of that section, subject to the condition that the power under clause (*e*) shall not be exercised by any of them until a hospital or place is provided at which persons

in the municipal borough suffering from plague are received for medical treatment and it is suitable for the purpose in the opinion of the District Magistrate or such officer as he may depute to inspect the same :—

* * * * * * * * *

Schedule.

1 Ahmedabad.	10 Amalner.	19 Bijapur.
2 Nadiad.	11 Dhulia.	20 Dharwar.
3 Broach.	12 Nasik.	21 Hubli.
4 Surat.	13 Poona City.	22 Gadag-Bettigeri.
5 Thana.	14 Poona Suburban.	23 Ratnagiri.
6 Bandra.	15 Satara City.	* *
7 Ahmednagar.	16 Pandharpur.	* *
8 Bhusawal.	17 Sholapur.	* *
9 Jalgaon.	18 Belgaum.	* *

THE BOMBAY NON-AGRICULTURISTS' LOANS ACT, 1928 (BOM. III OF 1928).

G. N., F. D., No. 6004-E, dated 1st December 1930 (B. G., Pt. I, p. 2951).

S. 6 Bombay Non-Agriculturists' Loans Rules, 1930.

Amended by G. N., R. D., No. 4891/39, dated 28th October 1940.
Amended by G. N., R. D., No. 4891/39 (a), dated 26th October 1940.
Amended by G. N., R. D., No., 4891/39, dated 24th April 1941.

In exercise of the powers conferred by section 6 of the Bombay Non-Agriculturists' Loans Act, 1928 (Bom. III of 1928), the Governor in Council is pleased to make the following rules to carry out the purposes of the said Act :—

1. *Short title and commencement.*—(1) These rules may be called the Bombay Non-Agriculturists' Loans Rules, 1930.

(2) They shall come into force on the first day of January 1931.

2. *Interpretation.*—In these rules, unless there is anything repugnant in the subject or context "the Act" means the Bombay Non-Agriculturists' Loans Act, 1928.

3. *Power of Government to sanction remissions.*—Government shall have full power to sanction remissions of principal and interest.

4. *Purposes for which loans may be granted.*—Loans may be granted under the Act for house-building and house-repairing to non-agriculturists whose houses have been destroyed or damaged by floods or other like calamities and for such other measures for the relief of distress caused by those calamities as may from time to time be determined by Government.

5. *Loans in certain cases how made.*—Advances in villages where co-operative reconstruction societies exist should ordinarily be made through such societies but the Collector may in his discretion grant an advance from the funds at his disposal if in any case owing to exceptional circumstances he thinks it necessary to do so.

6. *When loans may be granted.*—Loans should ordinarily be refused to persons who have already reconstructed houses either from their own resources or by raising loans from Sawkars :

Provided that the Collector, or any Prant Officer or Deputy Collector specially authorised by the Collector in this behalf, may, notwithstanding anything contained in this rule, grant loans in special cases, e.g. where the owner has obviously anticipated a loan from Government and made temporary arrangements in order to save time.

7. *Application.*—(1) An application for a loan under the Act shall be presented to any Revenue Officer not below the rank of an Aval Karkun.

(2) The application may be made either in writing in the form of Schedule I or orally. If orally made it shall be reduced to writing in the said form by the officer to whom it is made. When the security offered is land extracts from the Record of Rights relating thereto must be attached to the application.

(3) The officer granting the loan shall cause such inquiry as he thinks fit to be made into the statements made in the application.

8. *Officers by whom loans may be granted.*—Loans may be granted by the officers mentioned, and to the extent specified against each, in the following table :—

Officer.	Amounts in Rupees. Not exceeding
Collector	2,000
Prant Officer or Special Deputy Collector	500
Mamlatdar or Mukhtiarkar	200
Aval Karkun specially authorised	200

If an individual has more than one house damaged then the unit to which the maxima apply is the individual borrower and not the house.

Loans exceeding Rs. 2,000 will not be granted except for special reasons. Such loans will require the sanction of Government.

9. *Officer granting loans to satisfy himself of security.*—Except as otherwise directed by Government, no loan shall be granted unless the officer granting the loan is satisfied as to the sufficiency of the security, after allowing for a margin of safety. If a loan is to be granted to a *hari* or tenant, not himself a holder, the *hari's* or tenant's house upon which the money will be spent should be his security and his landlord, the zamindar, should guarantee the repayment of the loan. If a loan is to be advanced to a non-agriculturist, he should be required to find solvent sureties to sign the bond (Schedule II) in addition to the house which should be his security for the repayment of the loan.

10. *Security and form thereof.*—(1) Moveable property shall not be accepted as security except under the special orders of Government. Personal security may be accepted, even that of one person, provided that his solvency is certain.

(2) At the time of or before the issue of the loan or the first instalment of it a mortgage bond shall be executed in the form in Schedule II or to the like effect by the applicant and other persons standing as sureties in token that they understand and agree to the conditions contained therein.

(3) In the cases of Hindu joint families the bond shall be signed by the Manager of the joint family on behalf of the family and if possible by all other major members of the family and also by the guardian of the minor members.

(4) In the case of a joint applicantion by several persons for an advance to be taken jointly and severally under a joint bond a bond in the form of Schedule III shall be executed at the time of or before the issue of the loan or its first instalment.

(5) Notwithstanding anything contained in sub-rules (2) to (4), in cases where in the opinion of the Collector it is not possible for the applicant or his sureties to execute a bond for the repayment of the loan under this rule at the time of or before the issue of the loan or any instalment thereof, the loan or such instalment may be paid to the applicant on his agreeing, whenever required by the Collector, to execute a bond in the form in Schedule II or III as the case may be, or in such other form as Government may by general or special order direct.

11. *Period and minimum amount of repayment.*—(1) All loans shall be repayable within a maximum period of ten years. The minimum annual repayment shall be Rs. 10.

(2) Compound interest shall be charged on the amount of any instalment remaining unpaid after the date fixed for its payment.

12. *Procedure on failure of the borrower.*—The officer granting the loan, if at any time satisfied that a borrower has failed to comply with any of the conditions of the loan,

(*a*) shall, if the failure appears to be due to the misapplication of the loan, and

(*b*) may, if the failure is due to any other cause,

after recording in writing the grounds of his decision forthwith proceed to recover under the provisions of section 5 of the Act any sum still remaining unpaid by such persons.

13. *Power of Government to appoint persons to perform duties of certain officers.*—For the purposes of these rules Government may, by general or special order, appoint any person to exercise the powers or to perform the duties of a Collector, Prant Officer or Deputy Collector, Mamlatdar or Mukhtiarkar, or Aval Karkun.

14. *Form of Accounts.*—The accounts of all loans shall be kept in such form as Government may from time to time prescribe.

SCHEDULE I.

(*See* rule 7.)

Form of Application.

I. Applicant's name and residence.

II. Amount and object of loan.

III. Applicant's rights in the land on which his house stands.

IV. Nature of security whether personal or otherwise.

Date

Applicant's signature.

Notes.—(1) This application must be made to any Revenue Officer not lower in rank than an Aval Karkun and shall be free of Court-fee stamp.

(2) Interest at the rate of per centum per annum will be charged on the loan which will be repayable within a maximum period of ten years and the minimum annual repayment will be Rs. 10.

(3) When the security offered is land, extracts from the Record of Rights relating thereto must be attached to the application.

SCHEDULE II.

(*See* rule 10.)

Mortgage Bond.

THIS INDENTURE made the day of One Thousand Nine hundred and between of (hereinafter referred to as " the mortgagor " which expression shall where the context so admits be deemed to include his heirs, executors, administrators, and assigns) of the one part, and THE GOVERNOR OF BOMBAY (hereinafter referred to as " the mortgagee " which expression shall where the context so admits be deemed to include his successors in office and assigns) of the other part.

Whereas the mortgagor is possessed of and entitled free from incumbrances to the property hereinafter mentioned ;

And Whereas the mortgagor has in pursuance of the provisions of the Bombay Non-Agriculturists' Loans Act, 1928, and the rules made thereunder requested the mortgagee to grant him a loan of rupees (Rs.).

And Whereas the mortgagee has agreed to grant the said loan to the mortgagor on condition that the mortgagor shall execute a mortgage of the following property that is to say (here give particulars of the property to be mortgaged) free from incumbrances as security for the said loan of rupees (Rs.) and on the terms and conditions hereinafter mentioned :

NOW THIS INDENTURE WITNESSETH that in pursuance of the said agreement and in consideration of the said loan of rupees (Rs.) (herein after referred to as " the said loan ") paid by the mortgagee to the mortgagor (the receipt whereof the mortgagor hereby acknowledges) the mortgagor covenants with the mortgagee as follows :—

(1) that the mortgagor shall apply the said loan only to the purpose for which it is granted ;

(2) that the $\frac{\text{work}}{\text{object}}$ for the purpose of which the said loan is granted shall be $\frac{\text{completed}}{\text{carried out}}$ by the mortgagor before the day of or the subsequent date to which an extension of time may be granted by the* ;

(3) that the mortgagor shall repay to the mortgagee the said loan of rupees (Rs.) within the period of ten years from the date of the execution of these presents by equal monthly instalments of rupees (Rs.) the minimum instalment payable being ten rupees (Rs. 10) in a year each on the day of each month beginning with the day of next with interest at the rate of per cent. per annum commencing from the . And if the said loan or any part thereof shall remain unpaid after the said period of ten years the mortgagor will thereafter pay to the mortgagee interest for the same or so much thereof as shall for the time being remain unpaid at the rate of ;

(4) that the mortgagor hereby conveys and transfers unto the mortgagee (here state full particulars of the property being mortgaged, with its area, dimensions, survey or municipal number and boundaries) (hereinafter referred to as " the said premises ") together with all rights, easements and appurtenances belonging to the same TO HOLD the said premises unto the mortgagee as security

* The Officer should be specified.

for the due repayment of the said loan together with interest at the rate hereinbefore mentioned and, so far as may be, for the due performance of all the covenants and conditions of this mortgage, subject to the proviso for redemption hereinafter contained :

Provided always that if the mortgagor shall repay to the mortgagee all the moneys payable under this mortgage in the manner herein provided the mortgagee shall at the request and cost of the mortgagor execute and do all such deeds and acts as may be necessary for reconveying the said premises to the mortgagor or as he may require ;

(5) that the mortgagor shall pay interest at the rate of on the said loan on the day of each month in every year ;

(6) that the mortgagor hereby covenants with the mortgagee that the mortgagor now has good right to convey and transfer the said premises hereby conveyed and transferred unto the mortgagee subject to the following incumbrances, namely ;

(7) that the mortgagor at the request at any time hereafter of the mortgagee will at his own cost execute all such assurances as may be necessary or proper for more effectually vesting the said premises in the mortgagee in manner aforesaid ;

(8) that the mortgagor shall take all reasonable care of the said premises and shall not permit the same to be destroyed or injured or to deteriorate in a greater degree than they would deteriorate by reasonable wear and tear thereof and shall whenever the said premises are injured or deteriorated, forthwith repair and make good the same ;

(9) that if there shall be any breach by the mortgagor of the covenants or conditions on his part hereincontained, or if he shall die at any time before all sums payable to the mortgagee on the security of this deed including interest at the rate specified shall have been fully paid off, then the whole of the amounts for the time being out-standing against the mortgagor shall be immediately recoverable notwithstanding that the period fixed for repayment has not elapsed and it shall be lawful for the mortgagee to enter upon and take possession of the said premises and to sell and assign the same or any part thereof or to let the same for any term or period and to do all such acts for effectuating any such sale or letting as the mortgagee shall think fit ; and the receipt of the mortgagee for the purchase money of the said premises or any part thereof shall effectually discharge the purchaser or purchasers therefrom ; and any deficiency in price or loss which may result from such sale and all expenses attending the same, and all interest charges due under this agreement to the date of such sale shall be made good by the mortgagor and shall be recoverable as if they were arrears of land revenue due by them to the mortgagee ;

(10) that the mortgagor shall bear and discharge all local and municipal rates, taxes, assessments, duties and charges and any judi and any land revenue levied under the second paragraph of section 45 of the Bombay Land Revenue Code, 1879, which may, at any time during the continuance of this mortgage be or become due or payable in respect of the same premises and in case any such rate, tax, assessment, duty, charge, judi or land revenue is required to be paid by the mortgagee the amount so paid by him shall be added to the balance of the said loan then remaining unpaid and shall be a charge on the said premises ;

(11) that the mortgagor shall permit the mortgagee, his agents and servants at all reasonable times to enter upon and inspect the said premises;

(12) that the mortgagor shall not remove any of the fixtures in or upon the said premises except for the purpose of substituting others of a like nature without obtaining the previous consent of the mortgagee;

(13) that no charge created or transfer made by the mortgagor of the said premises or any part thereof during the continuance of this security shall have effect unless the mortgagee shall consent thereto in writing; and

(14) that all the costs and expenses incidental to the preparation, execution and registration of this deed except the stamp duty leviable in respect of this deed for the payment of which the mortgagee hereby undertakes the liability shall be borne by the mortgagor.

IN WITNESS whereof the parties hereto have hereunto set their hands and seal the day and the year first above-written.

Signed by the said mortgagor
in the presence of—
First witness:

Address—

Occupation—

Second witness:

Address—

Occupation—

Signed, sealed and delivered by the
Collector of

in the presence of—

1.

2.

Sureties.

We and of hereby declare ourselves sureties for the abovesaid that he shall do all that he has above undertaken to do and in case of his making any default therein we bind ourselves, our heirs, executors, administrators and assigns, jointly and severally to forfeit to the Governor of Bombay the sum of rupees* (Rs.) including interest at the rate stipulated in which the abovesaid has bound himself or such smaller sum as shall be deemed sufficient by the Governor of Bombay to recover any loss or damage which the Government may sustain by reason of such default and that such sum shall be recoverable as an arrear of land revenue due from us to the Governor of Bombay.

*Here enter amount sufficient to recover the advance.

And in consideration of the said loan of rupees (Rs.) advanced to the abovementioned and as security for the due repayment of the same we and of hereby mortgage to the Governor of Bombay the lands specified in the margin* [to which we are absolutely entitled free from encumbrances] and agree that in the event of the said making default in repaying the said loan in manner aforesaid the Governor of Bombay shall be at liberty to cause the said lands to be sold and the proceeds to be applied in payment of the amount recoverable from us hereunder.

* When the sureties are not the absolute owners or the property has been previously encumbered the nature of their interest or the details of such encumbrances should be entered in lieu of the words in brackets.

Signed and delivered by and
in the presence of—

1.
2.

SCHEDULE III.

[*See* Rule 10 (4).]

Order granting a joint loan under the Bombay Non-Agriculturists' Loans Act.

WHEREAS the persons mentioned in column 2 of Appendix A hereto as Borrowers (hereinafter called the Borrowers) being residents of in the taluka of and district of have applied for a loan under the Bombay Non-Agriculturists' Loans Act, 1928.

2. [a] [AND WHEREAS the Borrowers (or some, or one of the Borrowers) $\frac{\text{has}}{\text{have}}$ previously been granted $\frac{\text{a loan}}{\text{loans}}$ under the said Act and the amount now outstanding on account of the said loan(s) is as detailed in column 3 of Appendix A [a].

3. AND the Borrowers have agreed to be jointly and severally liable for the repayment of $\frac{\text{the said previous and present loans}}{\text{the loan now granted to them}}$ with interest at the rate of in fixed instalments of ;

4. THIS ORDER WITNESSES that a loan of the total amount of rupees (Rs.) is hereby granted to the Borrowers [b] [with the consent of the persons mentioned in column 8 of the said appendix as to the property specified in the corresponding entry in column 7 of the said appendix, each of the said persons having signed his name in column 8 of the said appendix in token of his consent] [b] at simple interest of per cent. per annum FOR THE PURPOSES respectively specified in column 6 of the said Appendix.

5. REPAYABLE with interest as herein stipulated and the costs of granting the present loan [a] together with the principal, interest and costs outstanding on the said previous loan (s)] [a] in fixed instalments of the amounts and on the dates mentioned in the margin, such instalments to be credited to interest and principal in such proportion and amount as shall from time to time be fixed by the Revenue Authorities subject to the control of Government until the whole of the dues outstanding shall have

Details of instalments.

Serial No.	Date.	Amount.	Remarks.

[a]—[a] Cancel where there are none.
[b]—[b] Cancel where all the Borrowers have the right to make the improvement.

been repaid (Provided that any further interest, simple or compound, which may be chargeable for delay in payment in accordance with the rules under the said Act shall be recoverable in addition to the said fixed instalments).

6. This loan shall be paid to the Borrowers on production of a certified copy of this Order at the Treasury at in the amounts specified in respect of each Borrower and on the dates and in the instalments mentioned in column 10 of the said Appendix.

7. THIS LOAN is granted subject to the provisions of the said Act and the Rules for the time being in force thereunder and to the following CONDITIONS, namely :—

(1) As to the repayment of the aggregate principal amount of the loan now granted, each of the Borrowers is as among the Borrowers themselves liable for and bound to contribute the amount specified in column 4 of the said Appendix.

(2) As to the payment of the aggregate instalments hereinafter mentioned, which are inclusive of principal, interest and costs of the loan now granted (and previous loans outstanding) each of the Borrowers is as among the Borrowers themselves liable for and bound to contribute (subject to condition 7) the amount specified in column 5 of the said Appendix in respect of each Borrower and such amounts shall (subject to condition 6) be payable on the dates hereinbefore mentioned for the payment of each aggregate instalment.

(3) All the Borrowers are nevertheless jointly and severally liable for and bound to repay to Government the total amount of the loan now granted with interest and costs (together with total amount outstanding on the previous loans hereinbefore referred to with interest and cost), and the total amount so payable shall (subject to conditions 6 and 7) be payable in the aggregate in the instalments and on the dates hereinbefore specified.

8. In default of the due observance by any of the Borrowers of any of the foregoing conditions, or if any instalment is not fully paid within one month of the date fixed for its payment, the whole of the amounts outstanding against the Borrowers may be recovered immediately from the Borrowers jointly and severally, notwithstanding that the period fixed for repayment has not elapsed.

* * * * * * * *

WE the persons who have signed our names in column 11 of the said Appendix hereby agree to all the terms and conditions of the above written Order and to the particulars specified in the said Appendix and accept the same as correct and our signature hereunder made witness this our agreement and acceptance.

AND we further agree that when any disbursement has been made to any of us, the signature or thumb impression of the recipient if made or recorded in Appendix B hereunder written shall be evidence of his having duly received such disbursement to the amount therein specified.

APPENDIX A.

1	2	3					4	5		6	7				8	9			10						11	12
Serial No.	Name and Account No. of Borrowers.	Detailed balances of previous loans still unrecovered.					Portions of present loan for repayment of which the Borrowers are respectively liable as between themselves.	Consolidated instalments (including principal, interest and costs of previous and present loans) for which the Borrowers are respectively liable as between themselves.		Purpose for which present loan is granted	Details of property for the benefit of which the loan is granted.				Signature of person having the right to execute the work or carry out the object whose consent is hereby given to the loan.	Details of land in occupation of Borrower [to be inserted in cases to which column 7 does not apply].			Instalments in which the loan is to be disbursed.						Signature or Thumb impression of Borrowers.	Remarks.
		a	b	c	d	e													1st		2nd		3rd			
		Date.	Amount.	Rate of Interest.	Principal.	Interest.		No.	Amount of each.		S. N.	Area.	Assessment.	Remarks.		S. N.	Area.	Assessment.	Amount.	Date.	Amount.	Date.	Amount.	Date.		

APPENDIX B.

Serial No.	Name of person to whom the disbursement is made.	Date of first disbursement.	Amount.	Signature or Thumb impression of person receiving disbursement.	Signature of disbursing officer.	Date of second disbursement.	Amount.	Signature or Thumb impression of person receiving disbursement.	Signature of disbursing officer.	Date of third disbursement.	Amount.	Signature or Thumb impression of person receiving disbursement.	Signature of disbursing officer.
1	2	3	4	5	6	7	8	9	10	11	12	13	14

Dated this day of

[Signature]

THE BOMBAY MATERNITY BENEFIT ACT, 1929 (BOM. VII OF 1929).

G. N., G. D., No. 1066, dated 2nd August 1929 (B. G., Pt. I, p. 1703).

S. 14 Bombay Maternity Benefit Rules, 1929.

Amended by G. N., P. & R. D., No. 9699-II, dated 1st June 1933.
Amended by G. N., P. & R. D., No. 9721, dated 7th December 1933.
Amended by G. N., P. & R. D., No. 9721, dated 29th January 1934.
Amended by G. N., P. & R. D., No. 8574-II, dated 20th September 1934.

In exercise of the powers conferred by section 14 of the Bombay Maternity Benefit Act, 1929 (Bom. VII of 1929), the Governor in Council is pleased to make the following rules, for the purpose of carrying into effect the provisions of the said Act, namely :—

1. *Short title.*—These rules may be cited as the Bombay Maternity Benefit Rules, 1929.

2. *Definitions.*—In these rules—

(*a*) "Act" means the Bombay Maternity Benefit Act, 1929.

(*b*) "Inspector" means an inspector of factories apointed under sub-section (*1*) of section 4 of the Indian Factories Act, 1911, and includes an additional inspector appointed under sub-section (*4*) of the said section.

(*c*) "Muster roll" means a muster roll, or register or a combined muster roll and register prepared and maintained under rule 3 and includes a register kept or deemed to have been kept under section 35 of the Indian Factories Act, 1911.

3. *Muster Roll.*—The employer of every factory in which women are employed shall prepare and maintain a muster roll and shall enter the following particulars in such muster roll, namely :—

(*a*) Name of woman ;

(*b*) department in which employed and name of factory ;

(*c*) ticket or departmental number ;

(*d*) dates with month and year on which employed and not employed ;

(*e*) total days employed in the payment period ;

(*f*) in the case of factories situated in places other than the cities of Bombay and Ahmedabad * *

(*i*) "wages" as defined in section 3 (*d*) of the Act ;

(*ii*) average daily wage calculated to the nearest quarter of an anna on the total wages earned during a period of three months immediately preceding the date on which the woman gives notice under section 6 (*1*) of the Act ;

(*g*) date on which the woman gives notice under section 6 (*1*) of the Act ;

(*h*) date of birth of child ;

(*i*) date of production of a certificate signed by a registered medical practitioner certifying that the woman is expected to be confined within one month ;

(*j*) date of production of certified extract from birth register ;

(*k*) date of first payment of maternity benefit and amount of same ;

(*l*) date of subsequent payments of maternity benefit and amounts of same ;

(*m*) if the woman dies, amount of maternity benefit paid and date of payment and the names of persons to whom paid ; and

(*n*) remarks column for the use of the Inspector only.

All entries in the muster roll shall be maintained up-to-date and shall always be available for inspection by the Inspector.

The employer may enter in the muster roll such other particulars as may be required for any other purpose.

4. *Responsibility of Inspector.*—The Inspector shall be primarily responsible for the administration of the Act, within the area assigned to him under the Indian Factories Act, 1911; provided that in areas where there are more than one inspector, the Commissioner of Labour, Bombay, may allocate the factories within such areas to such inspector as he shall deem proper.

5. *Powers of Inspector.*—(1) The Inspector may, within the area for which he is appointed, examine the muster roll maintained under rule 3 and shall have power to make such enquiries and to require the production of such papers or documents as he considers necessary for the purpose of ascertaining whether the provisions of the Act and of these rules are properly carried out in any factory or not; provided that he shall not require any employer to answer any question or to give any evidence tending to criminate himself.

(2) Every notice given under sub-section (*1*) of section 6 of the Act and every receipt for maternity benefit paid to any person under the provisons of the Act or of these rules shall, on demand, be produced before the Inspector.

6. *Penalty.*—If any employer contravenes the provisions of rule 3 he shall be liable, on conviction, to a fine not exceeding fifty rupees.

7. *Penalty.*—Any person who wilfully obstructs an Inspector in the exercise of his powers or the performance of his duties or fails to produce on demand the muster roll, or notices given under section 6 (*1*) of the Act or receipts for maternity benefits paid or other papers or documents necessary to enable the Inspector to ascertain that the provisions of the Act and these rules have been complied with, shall be liable, on conviction, to a fine not exceeding fifty rupees.

8. *Return.*—Every employer of women in a factory shall furnish to the Chief Inspector of Factories by the 15th day of January in each year a return in the form of Schedule I to these rules.

9. *Records.*—Records relating to the payment of maternity benefit under the provisions of the Act or these rules shall be preserved for a period of two years from the date of their preparation.

10. *Liability of an employer for maternity benefit on closing of factory.*—A woman entitled to maternity benefit shall not be deemed dismissed within the provisions of section 8, if she is discharged on account of the closing of the factory in which she is employed.

11. *Exhibition of abstract of provisions of Act and rules.*—The abstract of the provisions of the Act and rules in the local vernacular required to be exhibited by section 15 of the Act shall be in such form as the Chief Inspector of Factories may approve and be exhibited in such manner as he may require. The Chief Inspector of Factories may prepare an abstract and supply copies to employers who make an application for the same to the Inspectors at Bombay and Ahmedabad.

SCHEDULE I.

(*See* rule 8.)

Returns to be submitted to the Chief Inspector of Factories on or before the 15th January each year.

Name of Factory

Name of Occupier

Name of Manager

Year ending 31st December 19*

Average number of women employed daily

Number of women who claimed maternity benefit under section 6 (*1*) of the Act

Number of women who were paid maternity benefit for actual births

Number of other persons who were paid maternity benefit (section 7)

Total amount of maternity benefit paid

(Signature) .....,

Employer.

**Note.*—The return submitted on the 15th January 1934 shall cover the period from 1st July 1933 to 31st December 1933. Subsequent returns shall cover the period from 1st January to 31st December in each subsequent year.

THE BOMBAY BORSTAL SCHOOLS ACT, 1929 (BOM. XVIII OF 1929).

G. N., H. D., No. 7311 (IV) (a), dated 5th March 1931 (B. G., Pt. I, p. 584). **SS. 2 (2), 4 & 13**

In exercise of the powers conferred by sub-section (*2*) of section 2 of the Bombay Borstal Schools Act, 1929 (Bom. XVIII of 1929), the Governor in Council is pleased to appoint the 1st April 1931 as the date with effect from which the said Act shall come into operation.

2. In exercise of the powers conferred by sections 4 and 13 of the said Act, the Governor in Council is further pleased to declare the Dharwar Juvenile Jail a Borstal School with effect from the 1st April 1931.

G. N., H. D., No. 6130/2, dated 25th November 1930 (B. G., Pt. I, p. 2901). **S. 19 Dharwar Borstal School Rules, 1930.**

Amended by G. N., H. D., No. 6130/2-II, dated 30th October 1931.
Amended by G. N., H. D., No. P. 98 (c), dated 31st May 1933.
Amended by G. N., H. D., No. 6130/2, dated 15th December 1936.
Amended by G. N., H. D., No. 9180/3-V, dated 10th March 1939.
Amended by G. N., H. D., No. 2726/4-C, dated 4th May 1940.
Amended by G. N., H. D., No. 3919/4, dated 18th September 1941.
Amended by G. N., H D., No. P. 186, dated 6th February 1942.
Amended by G. N., H. D., No. 9858/4, dated 27th November 1947.
Amended by G. N., H. D., No. 4615/5, dated 24th May 1948.

In exercise of the powers conferred by section 19 of the Bombay Borstal Schools Act, 1929 (Bom. XVIII of 1929), the Governor in Council is pleased to make the following rules for the control and management of the Borstal School at Dharwar which is to be established under section 4 (*1*) of the said Act, namely :—

1. *Short title.*—These rules may be called the Dharwar Borstal School Rules, 1930.

2. *Definition.*—In these rules—
(*a*) " The Act " means the Bombay Borstal Schools Act, 1929.
(*b*) " School " means the Borstal School at Dharwar.

3. *Control and Management of the School.*—Subject to the orders of the Inspector General, the control and management of the school shall vest in the governor of the school.

4. *Appointments, Powers and Duties of Officials.*—The State Government shall appoint a governor and such other officials of the school as it thinks necessary. The governor and officials so appointed shall be subject to the rules laid down in the Bombay Jail Manual, except so far as those rules are inconsistent with the Act.

5. *Classification and Treatment of the Inmates.*—The inmates of the school shall be divided by the governor into the following grades according to their industry and good conduct, namely :—

(1) The ordinary grade.
(2) The special grade.
(3) The special star grade.
(4) The penal grade.

6. All pupils shall on reception be placed in the ordinary grade and promotion from one grade to another shall be regulated by close personal observation of the inmates, attention being specially paid to their general behaviour, their amenability to discipline and their attention to instruction both literary and industrial.

7. (1) An inmate shall remain in the *ordinary grade* for at least six months. During this period he shall be employed on manual labour commensurate with his physical condition and shall be carefully observed by the staff with special reference to his character, mental disposition and fitness for a special trade.

(2) An inmate shall be permitted to write at the cost of Government, one letter on his reception in the school. Thereafter during every two months of his detention in the school he shall, subject to good behaviour, be permitted to write two letters, one at his own cost and the other at the cost of Government and to have one interview with his relatives or friends.

(3) The dress of the inmate shall consist of—

Cap, white pork-pie Dungri.

Tunic, white kurta pattern, Dungri.

Shorts, white Dungri in summer, with an additional cotton woollen bandi in winter, which shall be plain grey without any stripes.

8. (1) A daily record shall be kept of the conduct and industry of each inmate in the ordinary grade. A register shall be kept for this purpose in which shall be recorded from day to day the words "very good," "good," "fair" or "bad" opposite each inmate's name. The register shall be examined once a week by the governor, who will then allot marks for each day, in figures, as follows, viz.:—

Very good	3 marks.
Good	2 marks.
Fair	1 mark.
Bad	No marks.

(2) The full marks for a month of 28 working days will therefore be 84, to which the governor shall have the power, when he thinks fit, to add 16 merit marks, making the monthly maximum of 100 marks.

(3) An inmate in the *ordinary grade* shall be required to earn at least 500 marks before he can be promoted to the *special grade*. If he is required to remain more than six months in the *ordinary grade*, the number of marks to be obtained by him for promotion shall be increased by such number as the governor may consider necessary.

9. (1) An inmate promoted to the *special grade* shall be placed in a trade suitable to his individual taste and capacity.

(2) Suject to the approval of the governor, he shall be permitted to write, during every month of his detention in the school, two letters, one at his own cost and the other at the cost of Government and to have one interview with his relatives or friends and to wear special uniform.

(3) The dress of the inmates shall consist of—

Cap, white pork-pie Dungri,

Tunic, white kurta pattern,

Dungri with a patch pocket on the left side,

Shorts, white Dungri.

(4) The inmate shall be allowed a gratuity at the rate of two annas per month.

10. (1) When, after close observation of his general demeanour and efficiency, the governor is satisfied that an inmate in the special grade can safely be placed in a position of special trust, he may be promoted to the "Special Star Grade". He shall then wear a distinctive badge. Such inmates may act as monitors in different capacities, and may be placed in authority over other inmates on parade, in workshops, playgrounds or in other situations where they can assist the administration in various capacities.

(2) *Dress.*—The ordinary dress shall be the same as for the special grade, except that a brass star 1″×1″ will be worn in front of the cap.

(3) The dress and privileges of monitors shall be as follows :—

Dress—

Cap, khaki, pork-pie, drill.
Tunic, khaki, kurta.
Shorts, khaki.
Shoes, chappals.

Privileges.—He shall be permitted to write, during every fortnight of his detention in the school, two letters, one at his own cost and the other at the cost of Government and to have one interview with his relatives or friends.

(4) An inmate in the special star grade shall be allowed a gratuity at the rate of four annas per month, and a monitor shall be allowed a gratuity at the rate of eight annas per month.

11. *Penal Grade.*—When an inmate in the ordinary grade is believed to be exercising a bad influence or is guilty of any serious misconduct, the governor shall place him in the penal grade for such period, as he may deem necessary, in the interest of the inmate himself or of others. For similar reasons an inmate in the special or special star grade may be placed in the ordinary or penal grade as the governor may think necessary. While in the penal grade, an inmate shall be employed in separation on hard and laborious work and shall forfeit all privileges including the gratuity, if any, allowed to him. The governor shall record in his Order Book particulars of every case in which he orders an inmate to be placed in the penal grade, with the reasons for such order, stating the period during which he is to be so retained. This record shall be placed before the Visiting Committees at each visit. If the inmate has been placed in the penal or ordinary grade from the special or special star grade, he shall not be restored to the grade from which he was degraded until he has served such period or periods in the inferior grades as the governor may determine.

12. *Hours of Work.*—All inmates, provided they are medically fit shall be required to labour for nine hours every working day. The day's work shall ordinarily be divided as follows :—

Drill and physical exercises or recreation, on alternate days.	...	...	1
Literary instruction	...	...	2
Manual work (including agriculture)	...	...	6

13. *Punishments.*—(1) The punishments which may be inflicted on an inmate of the school for offences specified in the Prisons Act, 1894, and the rules made thereunder shall be in the following form :—

(*i*) Formal warning,
(*ii*) Change of labour,
(*iii*) Forfeiture of gratuity for a period not exceeding 3 months,
(*iv*) Reduction in grade for a period not exceeding 3 months,
(*v*) Gunny clothing for a period not exceeding 3 months,
(*vi*) Cellular confinement for not more than 7 days,
(*vii*) Separate confinement for not more than 14 days,
(*viii*) Deduction of marks up to a maximum of 50 at any one time,
(*ix*) Penal grade not exceeding 1 month,
(*x*) Deprivation of any of the privileges of the grade for a period not exceeding 3 months.
} Minor.

(*xi*) Reduction in grade for more than 3 months,
(*xii*) Combination of any of the punishments, specified in clauses (*i*) to (*x*) above,
(*xiii*) Cellular confinement for not more than 14 days,
(*xiv*) Separate confinement for not more than 1 month,
(*xv*) Deduction of marks over 50 but not exceeding 100 at any one time,
(*xvi*) Penal grade exceeding 1 month,
(*xvii*) Deprivation of any of the privileges of the grade for a period exceeding 3 months,
(*xviii*) Corporal punishment with a light rattan which shall not exceed 15 stripes.
} Major.

(2) No punishment shall be awarded to any inmate by any official of the school except the governor or in his absence the official exercising his functions.

14. *Constitution of the Visiting Committee.*—(1) The Visiting Committee shall consist of eleven members. Of these, seven including the Chairman shall be officials and four shall be non-officials.

(2) The official members shall be the following :—

The District Magistrate, Dharwar.
The Chief Inspector of Certified Schools, State of Bombay.
The District Judge, Dharwar.
The Medical Officer of the School.
The Governor of the School.
The Educational Inspector, Southern Division.
The District Superintendent of Police, Dharwar.

(3) The four non-official members shall be nominated by the State Government from among the non-official members of the District Committee of the District Probation and After-Care Association, Dharwar.

(4) The District Magistrate, Dharwar, shall be the Chairman of the Committee. In the absence of the Chairman, the Senior Official member present shall act as chairman.

15. *Term of office.*—

(*i*) The term of office of an official member of the Committee shall continue so long as he holds the office in virtue of which he is such a member ;

(*ii*) the non-official members of the Committee shall hold office for a period of one year and for such further period, if any, as the State Government may by general or special order in that behalf direct :

Provided that if, during the aforesaid period any non-official member ceases to be a member of the District Committee of the District Probation and After-Care Association, Dharwar, the State Government may direct that such member shall cease to be a member of the Committee and thereupon his office shall be deemed to have become vacant ;

(*iii*) any casual vacancy among the non-official members shall be filled up by the nomination in manner provided in these rules of a person thereto who shall hold office so long only as the person in whose place he is nominated would have held if the vacancy had not occured ;

(*iv*) the non-official members nominated on the Committee shall be eligible for renomination on the expiry of the term of their office.

16. [*Deleted.*]

17. *Duties of the Visiting Committee*—It shall be the duty of the Visiting Committee—

(*a*) to visit the school. Every member of the Committee, other than the Governor shall visit the school individually, every month. A meeting of the Committee shall be held not less than once every quarter. Five members shall form a quorum at such meetings ;

(*b*) to inspect all parts of the school and see every inmate detained therein;

(*c*) to satisfy themselves that the necessary disciplinary and reformative measures are being carried out ;

(*d*) to give every inmate an opportunity of making an application or a complaint to them and to inquire into the same ;

(*e*) to inspect the records of—

(*i*) all inmates whose release falls due within three months of the date of the Commitee's meeting ; and

(*ii*) those inmates whose discharge on licence may be recommended to the Inspector General in accordance with sub-section (*1*) of section 14 of the Act ; and

(*f*) to inquire into the details of the past history, the nature of the offence, the conduct and character in the school, and the future intentions and prospects of every inmate whose case may be put before them for consideration by the governor of the school and, if they think fit, to recommend him to the Inspector General for discharge on licence.

18. The licence granted under sub-section (*1*) of section 14 of the Act shall be in the form of the schedule appended to these rules. The recommendation of the Visiting Committee shall state whether any society or responsible person is willing to take charge of the inmate under its or his supervision and to provide work for him and whether the inmate is willing to be placed under the authority and supervision of such society or person.

19. *Method of release on licence.*—An inmate discharged on licence under sub-section (*1*) of section 14 of the Act shall ordinarily be accompanied by a member of the school staff to the place of his destination. He shall be accompanied only as far as the steamer in Bombay.

20. *Measures on Release.*—When the release of an inmate is about to fall due, the Committee shall take such measures as it thinks fit. Such measures may include—

(*a*) sending the inmate to his home,

(*b*) finding employment for him, or

(*c*) otherwise assisting him.

20-A. *Award.*—The Committee may recommend the grant of an award not exceeding Rs. 20 to a deserving inmate. The amount so recommended shall be paid through the Probation Officer to such inmate if he does not go home or does not find any employment.

21. *Visitors' Book.*—A visitors' book shall be kept at the school in which shall be recorded the minutes of the proceedings of each meeting of the Committee. A copy of the proceedings of each meeting shall be sent to the Inspector General.

SCHEDULE.

Form of Order for Discharge on Licence.

[*Vide* rule 18.]

I, the Inspector General of Prisons, State of Bombay, do by this licence permit , son of , caste , residence , number , who was ordered to be detained in a Borstal School by the Court of , under section of the Bombay Borstal Schools Act, 1929 (Bom. XVIII of 1929), for a term of on the day of 19 , and who is now detained in the Borstal School at Dharwar, to be discharged from the said school on condition that he be placed under the care, supervision and authority of during the remaining portion of the aforesaid period of detention.

This licence is granted subject to the conditions endorsed hereon, upon the breach of any of which it will be liable to be revoked.

Inspector General of Prisons, State of Bombay.

Conditions.

1. The licensee shall proceed to, and live under the authority of until the expiry of the term for which he was ordered to be detained in the Borstal School at Dharwar unless the licence is sooner revoked.

2. He shall not, without the consent of the said remove from that place, or any other place which may be named by the said

3. He shall obey such instructions as he may receive with regard to punctual and regular attendance at employment or otherwise.

4. He shall abstain from any violation of the law and shall lead a sober and industrious life to the satisfaction of the said

5. This licence may be revoked at any time by the Inspector General under section 15 (*1*) of the Act either of his own accord or at the request of the said and upon such revocation the licensee shall be detained in a Borstal School until the expiry of the term for which he was ordered to be detained in such school.

6. If the licensee removes himself from the supervision and authority of the said this licence shall be deemed to have been revoked under section 15 (*2*) of the Act from the date from which he has so removed himself.

I hereby acknowledge that I am aware of the abovenamed conditions which have been explained to me.

Signature or mark of the inmate of
the Borstal School at Dharwar.

Certified that the conditions specified in the above order for discharge on Licence have been read over to the inmate named in the said order, and that he has accepted them as the conditions under which he is discharged before the expiry of the term of his detention.

Governor,
Borstal School at Dharwar.

Certified that the inmate named in the above order for discharge on licence has been discharged on and made over to

Governor,
Borstal School at Dharwar.

(Here the signature of the person under whose supervision and authority the inmate is required to live.)

THE BOMBAY LOCAL FUND AUDIT ACT, 1930 (BOM. XXV OF 1930).

G. N., G. D., No. 7679, dated 23rd March 1931 (B. G., Pt. I, p. 666). **S. 4**

In exercise of the powers conferred by section 4 of the Bombay Local Fund Audit Act, 1930 (Bom. XXV of 1930), the Government of Bombay is pleased to declare that the accounts of the following local authorities shall be subject to audit under the said Act, viz. :—

(1) Taluka Local Boards,
(2) District Local Boards,
(3) Municipalities, and
(4) School Boards constituted under the Bombay Primary Education Act, 1923.

G. N., G. D., No. 7679, dated 11th December 1931 (B. G., Pt. I-A, p. 355). **S. 15 Bombay Local Fund Audit Rules, 1931.**

Amended by G. N., G. D., No. 7679, dated 1st September 1932.
Amended by G. N., G. D., No. 7679, dated 6th March 1934.
Amended by G. N., G. D., No. 9270, dated 4th February 1935.
Amended by G. N., G. D., No. 1384/33, dated 1st July 1938.

In exercise of the powers conferred by section 15 of the Bombay Local Fund Audit Act, 1930 (Bom. XXV of 1930), the Government of Bombay is pleased to make the following rules for the audit of accounts of the local authorities whose accounts are declared to be subject to audit under the said Act :—

1. *Short title.*—These rules may be called the Bombay Local Fund Audit Rules, 1931.

2. *Definitions.*—In these rules—

(*a*) "Act" means the Bombay Local Fund Audit Act, 1930.

(*b*) "A special audit" means an audit of accounts pertaining to a specified item or series of items requiring thorough examination.

(*c*) "A detailed audit" means an audit of accounts for the whole year.

(*d*) Expressions which have been defined in the Act shall have the same meaning assigned to them unless the context requires a different interpretation.

3. *Audit of accounts of local authorities by auditors.*—The accounts of the local authorities whose accounts are subject to audit under section 4 of the Act shall be audited by auditors of the Local Audit Department, who are hereby appointed to be auditors under section 3 (*a*) of the Act, under the direction and control of the Examiner :

Provided that nothing in this rule shall prevent the Examiner from carrying out himself an inspection or audit of accounts of any local authority at his discretion.

4. *Requisitions under section 6 to be sent by registered post or by messenger.*—The requisitions referred to in clauses (*a*) and (*b*) of sub-section (*1*) of section 6 of the Act shall be made by the auditor and shall be sent to the Chief Officer or Administrative Officer, as the case may be, or, in his absence, to the Secretary or other head of the ministerial establishment of the local authority by registered post or messenger. If the requisition is sent by messenger an acknowledgment from the officer concerned with the date of receipt shall be obtained in the transit book in Form No. 1 appended to these rules.

5. *Invitations to be sent in the form of a letter.*—The invitations which an auditor may issue in pursuance of clause (*c*) of sub-section (*1*) of section 6 of the Act to honorary officers or members of a local authority shall be in the form of a letter addressed to such officer or member ; a copy of every such letter shall be retained in the case file. The invitation shall be sent either by registered post or by messenger and in the latter case an acknowledgment duly signed by him and dated shall be obtained in the transit book in Form No. 1 appended to these rules.

6. *Failure to comply with requisition to be reported to the Collector.*—If a requisition under clause (*a*) or (*b*) of sub-section (*1*) of section 6 is not complied with within the period specified in the requisition, the auditor shall report the failure to the President or the Chairman of the local authority as the case may be, and if the requisition is not then complied with within the next three days thereafter, he shall send the papers to the Collector, with a brief statement of facts, for further action. A copy of such communication shall be forwarded simultaneously to the Examiner.

7. *Notice of date of commencement of audit to be given by the Examiner to President or Chairman.*—Notice of the date of the commencement of the audit under sub-section (*3*) of section 6 of the Act shall be given by the Examiner to the President or the Chairman of the local authority, as the case may be, and shall be issued in Form 2 appended to these rules.

8. *Auditor to conduct audit during office hours.*—Except in cases where the Examiner, in consultation with the head of the office of the local authority, decides otherwise, the auditor shall, for the purpose of conducting audit, attend at the head office of the local authority during office hours.

9. *Local authority to make suitable arrangements to enable auditor to hold office.*—The local authority shall make suitable arrangements to enable the auditor to hold his office for conducting audit.

10. *Auditor not to remove any document without the permission of the head of the office.*—The auditor shall not, without the previous permission in writing of the head of the office of the local authority whose accounts are being audited or of any person authorised by him in this behalf, remove from such office any books, vouchers or documents of any kind whatsoever, except that if in case of fraud or for other good reason he thinks it absolutely necessary to keep the document in his possession, he may do so after passing a receipt therefor and shall at once report the matter to the Examiner.

11. *Auditor not to correspond direct with President, Vice-President or Chairman of local authority.*—The auditor shall not correspond direct with the President of Vice-President or Chairman or Vice-Chairman of the local authority whose accounts are being audited by him except for the purpose of reporting an embezzlement or for the purposes mentioned in sub-section (*1*) of section 6 of the Act or for the purposes of rule 7 or rule 17.

12. *Accounts to be audited annually.*—The accounts of a local authority shall be audited annually in arrears and as far as possible before the close of the succeeding year.

13. *Accounts for complete financial year, preceding the date of audit to be ordinarily taken up for audit.*—Accounts for the complete financial year, or years, preceding the date of audit shall ordinarily be taken up for audit. The Examiner may, however, have the accounts audited up to date if, in his opinion, such audit is necessary in any particular case.

14. *Detailed audit how to be carried out.*—(*a*) The accounts of a School Board shall be audited in detail for the whole year. In the case of other local authorities a test audit of three months' accounts, selected at random shall ordinarily be carried out. The accounts for the month of March shall necessarily be included in the three months' accounts to be selected for detailed audit. The test audit of three months' accounts shall include a general review of the accounts of the remaining nine months.

(*b*) In the case of the public works accounts of a local authority a few works shall be selected for detailed audit with connected papers irrespective of the months in which the bills for those works may have been paid.

15. *Detailed audit for whole year or special audit to be taken up at discretion of Examiner or when requested by Collector or Commissioner.*—A detailed audit of the accounts of a local authority for the whole year or a special audit may be taken up at the discretion of the Examiner if such a course appears to him to be necessary in any case. The Collector or the Commissioner may, in special circumstances, request the Examiner to arrange for a special audit or a detailed audit of the accounts of a local authority for any period.

16. *Auditor to verify cash balances, etc., during audit.*—The auditor shall during the audit verify the cash balances, securities held by a local authority or by any of its officers or servants on its behalf and also the postage stamps and the stock of printed forms kept for issue of receipts for payments received.

17. *All enquiries and remarks to be communicated through objection statements.*—All enquiries which it is necessary for the auditor to make and all remarks made by him during audit shall be made or communicated through an objection statement in Form No. 3 appended to these rules.

18. *Objection statements to be issued day by day under the dated signature of auditor.*—The auditor shall issue such objection statements over his dated signature day by day as the audit proceeds, and shall obtain an acknowledgment from the head of the office of the local authority, with the date of receipt entered in the transit book in Form 1 appended to these rules.

19. *Auditor to issue separate objection statements for each department.*—The auditor shall, as far as practicable, issue separate objection statements for each department of the local authority so that the department concerned may proceed to take action as soon as the objection statement is received.

20. *Objection statements to be returned with the least possible delay.*—The objection statements shall be returned, with the least possible delay, over the dated initials of the head of the office of the local authority together with either an explanation to the objection or a statement of the action taken or proposed to be taken to meet the objections raised and, where necessary, shall also contain replies to the enquiries made by the auditor.

21. *Auditor to reissue any item on which sufficient action has not been taken.*—On receipt of the replies to the points raised by the auditor he shall where necessary reissue for further action any items on which final or sufficient action has not been taken or on which the enquiries made have not been satisfactorily answered. Such reissues shall be marked as " Further Remarks " in the transit book in Form No. 1 appended to these rules.

22. *Objection statements to be returned to auditor within three days before the close of audit.*—All objection statements shall be returned to the auditor within one to three days before the close of the audit, according as he may direct, irrespective of the question whether all the objections have been fully answered or not.

23. *Auditor to report fraud or embezzlement confidentially.*—When a fraud or an embezzlement is detected or may reasonably be inferred from any suspicious circumstances, or where any irregularity is noticed in the accounts, the auditor shall forthwith report confidentially the circumstances in writing to the President or Vice-President or Chairman or Vice-Chairman of the local authority concerned and also to the Examiner. When a fraud or embezzlement has been fully investigated by the auditor, he shall submit a complete report on the case to the Examiner, who shall send copies thereof either to the Director of Public Instruction in the case of School Boards or to the Commissioner and the Collector in the case of any other local authority and to the President, Vice-President, Chairman or Vice-Chairman of the local authority as the case may be : Provided, however, that where the President, Vice-President, Chairman or Vice-Chairman of a local authority is or are involved or suspected of being involved in any fraud or embezzlement, neither the preliminary nor the complete report shall be sent to any of these officers last mentioned.

24. *Result of audit to be recorded in the prescribed report and in Form 3.*—The result of each audit shall be recorded in the report prescribed by section 8 of the Act and except in the case of School Boards also in the objection statement in Form No. 3 appended to these rules. The report shall be as concise as possible but shall contain all the relevant facts and shall, as far as possible, be confined to the points mentioned in clauses (*a*) to (*d*) of section 9 of the Act.

25. *Objections admitted and questions settled to be noted in report only under certain circumstances.*—Objections admitted or questions settled during the course of audit shall be noted in the report only if the irregularity is of a serious nature, or if any defect in the system or error in principle which may have been brought to light has not been permanently removed.

26. *Auditor's report to be in two parts.*—(*a*) The report shall be in two parts namely, Part I—Previous Audit and Part II—Current Audit. Part I shall contain a brief summary of the remarks still requiring action or further action. Part II shall contain remarks relating to the current audit.

(*b*) The details of the vouchers or other documents which have a bearing on the remarks in the audit report shall be given in an appendix or appendices to the report together with reference to the paragraph or paragraphs of the audit report.

27. *Nature of details to be reported.*—The auditor shall—

(*a*) state in the first paragraph of the report the date on which the audit was taken up, the date when it was completed, and the months which were selected for the detailed audit ;

(*b*) give in the opening paragraph of Part II of the report on the accounts of a municipality a statement of assets and liabilities indicating the financial position of the municipality concerned with a brief resume of its financial condition. Fixed assets, such as land, buildings, plant and machinery, shall be excluded from

the statement, and only liquid assets, such as cash balance in hand or in the Treasury or Bank, investments, advances and outstanding rents, rates, and such liabilities as unspent balances of earmarked grants or revenues, contributions payable, deposits and unpaid bills, should be included therein ;

(*c*) state whether money borrowed on the security of allocated revenues or received as a grant from Government or other sources for any specific purpose has been expended on such purpose ;

(*d*) state where a sinking fund has been prescribed, whether it is being properly kept up ;

(*e*) state whether all advances and investments by the local authority are fully secured ;

(*f*) state in detail all loans contracted by the local authority and also state whether the prescribed provision has been made for the repayment of the principal and interest out of the revenues of the local authority ;

(*g*) certify, where separate accounts for any undertaking have to be maintained, whether they have been so maintained and whether the accounts present a true and correct view of the results of the undertaking for the period under audit ;

(*h*) certify as to the correctness of the annual account ;

(*i*) give at the end of the report a brief resume of the matters dealt with in the report and conclude with an opinion on the state of the accounts as a whole ;

(*j*) append to his report—

(1) a statement showing the arrears of taxes at the end of the year and the two preceding years in the case of local authorities which impose taxes ;

(2) a statement of accounts for the year showing under the head " receipts"—

(*i*) the revenue from direct taxes,

(*ii*) the revenue from indirect taxes,

(*iii*) income from properties,

(*iv*) income from miscellaneous sources,

(*v*) Government grants,

(*vi*) extraordinary items of revenue, and

(*vii*) debts, deposits and advances, and under the head " expenditure "—

(1) ordinary expenditure,

(2) capital expenditure,

(3) extraordinary expenditure, and

(4) debts, deposits and advances ;

and

(3) in the case of School Boards, statements, in such forms as may be laid down by Government from time to time—

(*i*) showing the gross expenditure, amount disallowed and the net amount admitted for grant under several heads ;

(*ii*) setting forth items disallowed for Government grant with reasons therefor ;

(*iii*) giving the figures of receipts under several heads ;

(*iv*) containing miscellaneous objections which do not affect Government grant ;

(*v*) showing the amounts to be recovered from Non-Local Authority Municipalities (to be appended to the audit reports only in the case of School Boards of District Local Boards) ; and

(*vi*) showing the details of the Datum Line expenditure and grant in respect of the administrative, supervising, clerical and menial staff on whose account a grant is to be paid on datum line conditions (to be appended to the audit reports only in the case of School Boards of District Local Boards).

28. *Objection Statement to contain remarks on technical irregularities, etc.*—The objection statement in Form No. 3 appended to these rules shall contain remarks on technical irregularities, defects and omissions in accounts and registers and objections relating to individual items of receipts or payments.

29. *Final objection statement to be in two parts.*—The final objection statement shall also be in two parts. Part I shall show items relating to the previous audit on which action or further action is necessary, and Part II shall contain items relating to the current audit.

30. *Copies of audit notes on the accounts of School Boards to be submitted to Government.*—Copies of audit notes on the accounts of School Boards of local authorities under the Bombay Primary Education Act, 1923, shall be submitted to Government for their information.

31. *Explanation of President or Chairman to be sent in triplicate.*—Explanations to the audit report to be furnished to the Examiner by the President or Chairman of a local authority under sub-section (*1*) of section 10 of the Act shall be sent in triplicate :

Provided that, in the case of School Boards, a copy of the explanation sent by the Chairman of the School Board to the Examiner shall be sent to the President of the District Local Board or the Municipality, as the case may be, who may submit his remarks, if any, to the Examiner within a fortnight of receipts by him of the explanation.

32. *Defalcation or loss in money or stores to be reported by the President or Chairman of local authority.*—Whenever any defalcation or loss in money or stores is discovered, the fact shall be promptly reported by the President or Chairman of the local authority to the Examiner and to the Collector, and in the case of School Boards to the Director of Public Instruction also, giving in detail the circumstances which led to such defalcation or loss. The Examiner shall then consider whether such loss was due to any fault in the system and, if so, shall issue the necessary instructions. In every other case he shall direct that a special audit be made.

Note.—Nothing in this rule shall prevent the institution of criminal proceedings against any person, suspected of or involved in any defalcation or loss of money or stores should such a course be considered advisable.

33. The local authorities (except the School Boards constituted under the Bombay Primary Education Act, 1923) shall maintain their accounts in Forms Nos. 4 to 7 appended to these rules.

34. Without the previous approval of Government, no local authority shall introduce any new form or make any variation or alteration in any of the forms sanctioned.

FORM No. 1.

(*See* Rules 4, 5, 18 and 21.)

Transit Book of the *Circle.*

Date.	Description of documents sent.	To whom sent.	Dated initials of		Date of return.	Initials of S. A.	Remarks.
			S. A.	Receiving Officer.			

FORM No. 2.

(*See* Rule 7.)

S. Y. 330.

Office of the

Station

No.

Date

Memo.

will take up the audit of the accounts of the under the provisions of the Local Fund Audit Act (Bom. XXV of 1930) on or about the It is requested that he may be afforded the usual facilities in carrying out his work.

2. It will greatly facilitate work and reduce subsequent correspondence if you will kindly arrange that the objections noted by the auditor are taken up promptly for settlement.

(*Signature.*)

(*Designation.*)

FORM No. 3.

(*See* Rules 17, 24 and 28.)

S. Y. 337. **Page**

Audit Objection Statement on the Accounts of *for*

Date of transaction and number of voucher.	Particulars of transaction.	Objection or suggestions.	Reply of Local Authority or Head of the Office.	Notes of admission or further remarks by Auditor.	Further explanation by Local Authorities or Head of the Office.	Final remarks of Auditor.

[For the use of Municipalities and Notified Area Committees only.]

FORM No. 4.

(*See* Rule 33.)

GENERAL CASH BOOK FOR THE $\frac{\text{MUNICIPALITY}}{\text{NOTIFIED AREA COMMITTEE}}$ OF

Dr. *Cr.*

Month and date of Receipt.	Serial No.	Particulars of Receipts.		Head of Account.	Amount.	Daily total with balance.	Date of Payment.	Voucher No.	Particulars of Payments.		Head of Account.	Amount.	Daily total with balance.
		From whom received.	On what account.						To whom paid.	On what account.			
1	2	3	4	5	6	7	8	9	10	11	12	13	14

[For the use of District and Taluka Boards only.]

FORM No. 5.

(*See* Rule 33.)

GENERAL CASH BOOK FOR THE DISTRICT / TALUKA BOARD.

Receipts.

Month and date.	Reference to classified Abstract.	Particulars of receipts and from whom received.	Serial Number of receipt and Challan	Amount.	Total.	Remitted to Treasury or Bank.	
						Number and date of Challan.	Amount.
1	2	3	4	5	6	7	8

Expenditure.

Month and date.	Reference to classified. Abstract.	Particulars of charges and to whom paid	Number of cheque.	Serial Number of Disbursement Voucher.	Amount.	Total.
9	10	11	12	13	14	15

[For the use of District and Taluka Boards only.]

FORM No. 6.
(*See* Rule 33.)

CLASSIFIED REGISTER OF $\frac{\text{RECEIPTS}}{\text{PAYMENTS}}$ OF $\frac{\text{DISTRICT}}{\text{TALUKA}}$ FOR THE YEAR 19 -19 .

Month and date.	Number of Challan or Voucher.	Minor Heads and Sub-heads.				Total.	Initials of Accountant and Chief Officer.
	Budget Provision.						

Month and date.	Number of Challan or Voucher.	Minor Heads and Sub-heads.				Total.	Initials of Accountant and Chief Officer.
	Budget Provision.						

[For the use of Municipalities and Notified Area Committees only.]

FORM No. 7.

(*See* Rule 33.)

CLASSIFIED REGISTER OF RECEIPTS / PAYMENTS FOR THE MUNICIPALITY / NOTIFIED AREA COMMITTEE OF

| Head of Accounts (as in model budget.) | Budget Grant. | Dates. | | |

THE BOMBAY FINANCE ACT, 1932 (BOM. II OF 1932).

G. N., R. D., No. 8836/28, dated 13th May 1932 (B. G., Pt. I, p. 1253). **S. 8**

In exercise of the powers conferred by section 8 of the Bombay Finance Act, 1932 (Bom. II of 1932), the Governor in Council is pleased to appoint the Collector of Bombay, the Collectors including the Deputy Commissioner, Upper Sind Frontier, the Mamlatdars, Mukhtyarkars and Mahalkaris to be inspecting officers to inspect the prescribed books of accounts of licensees in the areas under their respective jurisdictions, and the Huzur Deputy Collectors, Huzur Mamlatdars and Huzur Mukhtyarkars to be inspecting officers to inspect the prescribed books of accounts of licensees in the headquarters-town of the districts.

G. N., R. D., No. 8836/28, dated 25th July 1932 (B. G., Pt. I, p. 1751). **S. 8**

In exercise of the powers conferred by section 8 of the Bombay Finance Act, 1932 (Bom. II of 1932), the Governor in Council is pleased to appoint the Electrical Engineer to Government and the Deputy Collector, Bombay, to be inspecting officers to inspect the prescribed books of accounts of licensees in the City and Island of Bombay.

G. N., R. D., No. 8836/28/20473, dated 5th December 1932 (B. G., Pt. I, p. 2738). **S. 8**

In exercise of the powers conferred by section 8 of the Bombay Finance Act 1932 (Bom. II of 1932), the Governor in Council is pleased to appoint the Superintendent of Matheran and the Assistant Superintendent of Matheran to be inspecting officers to inspect the prescribed books of accounts of licensees in the area under their jurisdiction.

G. N., R. D., No. 8836/28/682, dated 29th January 1934 (B. G., Pt. I, p. 255). **S. 8**

In exercise of the powers conferred by section 8 of the Bombay Finance Act, 1932 (Bom. II of 1932), the Governor in Council is pleased to appoint the District Deputy Collector, Bombay Suburban District, to be an Inspecting Officer to inspect the prescribed books of accounts of licensees in the Bombay Suburban District.

G. N., R. D., No. 8836/28/2740, dated 17th April 1934 (B. G., Pt. I, p. 861). **S. 8**

In exercise of the powers conferred by section 8 of the Bombay Finance Act, 1932 (Bom. II of 1932), the Governor in Council is pleased to appoint the District Deputy Collector, Kolaba, S. D., and the Mamlatdar of Karjat to be inspecting officers to inspect the prescribed books of accounts of the Matheran Electric Supply Company Limited.

S. 11 Bombay Electricity Duty Rules, 1932.

G. N., R. D., No. 8836/28, dated 14th September 1932 (B. G., Pt. I, p: 2154).

Amended by G. N., R. D., No. 8836/28, dated 20th April 1934.
Amended by G. N., R. D., No. 8836/28, dated 24th September 1937.
Amended by G. N., R. D., No. 8836/28, dated 29th January 1941.
Amended by G. N., R. D., No. 8836/28, dated 24th April 1942.
Amended by G. N., R. D., No. 1595/45, dated 14th February 1950.

In exercise of the powers conferred by section 11 of the Bombay Finance Act, 1932 (Bom. II of 1932), the Governor in Council is pleased to make the following rules :—

RULES.

1. *Short title.*—These rules may be called the Bombay Electricity Duty Rules, 1932.

2. *Time and manner of collection and payment.*—A licensee shall include the electricity duty leviable under the Act as a separate item in the bill of charges for the energy supplied by him, and shall recover the same from the consumer along with his own charges for the supply of such energy. The licensee shall pay such duty within forty days after the expiry of the month for which it is levied, in such manner as the Collector may direct.

3. *Keeping of books of account.*—The books of accounts kept by a licensee, under section 7 of the Act, shall contain the following particulars :—

(*i*) number of units of energy supplied for purposes of lights and fans ;

(*i-a*) number of units of energy supplied for purposes other than lights and fans as follows :—

(1) for power,
(2) for domestic appliances,
(3) for other purposes, if any;

(*ii*) description of the premises to which the energy is supplied ;

(*iii*) amount of electricity duty with the rate charged shown separately in respect of clauses (*i*) and (*i-a*) above ; and

(*iv*) date of cutting off the supply of energy on failure of payment of electricity duty.

Provided that the licensee shall be at liberty to furnish particular (*ii*) in a separate statement to the satisfaction of the Inspecting Officer.

4. *Submission of returns.*—The following monthly returns shall be submitted, in duplicate, by a licensee, under section 7—one copy to the Collector and another to the Electrical Engineer to Government—before the 15th of the month next after that following the month to which the return pertains :—

(1) a return in Form A appended hereto, and containing the following particulars :—

(*a*) number of units of energy consumed for purposes of lights and fans ;

(*a-a*) number of units of energy consumed for purposes other than lights and fans as follows :—

(1) for power,
(2) for domestic appliances,
(3) for other purposes, if any ;

(*b*) adjustment allowed by a licensee under rule 9 ;

(*c*) amount of electricity duty charged and recovered ; and

(*d*) number of units of energy exempted under the proviso to section 5 ;

(2) a return in Form B appended hereto, and containing the following particulars :—

(*a*) names and addresses of consumers who have made default in payment of electricity duty ; and

(*b*) amount of electricity duty found irrecoverable from such consumers.

5. *Inspection of books of account.*—An inspecting officer appointed under section 8 of the Act may, at any time, require a licensee, to produce for inspection at the registered or other office of the licensee such books and records in his possession or control as may be necessary for ascertaining or verifying the amount of electricity duty leviable by him under the Act.

6. *Power of entry of inspecting officers.*—An inspecting officer may enter any premises where energy is, or is believed to be, supplied by a licensee, for the purpose of—

(*i*) verifying the statements made in the books of account kept and returns submitted by the licensee ;

(*ii*) checking the amount of energy consumed as mentioned in the returns and accounts by inspecting meters and meter cards ;

(*iii*) verifying the particulars required in connection with the levy of electricity duty.

7. *Other duties of inspecting officers.*—An inspecting officer shall, every month, inspect the books of account kept and returns submitted by a licensee under rule 4, and apply a detailed test of individual entries, to the extent prescribed by the Collector, for verifying the particulars noted by the licensee, so far as they are connected with the levy of electricity duty. He shall also verify all entries relating to—

(*i*) exemption from electricity duty, and

(*ii*) adjustments allowed by the licensee under rule 9.

8. *Reading of meters.*—(1) A licensee shall in respect of energy liable to electricity duty under the Act cause the meter of every consumer to be read, as far as possible on the same date in each month, and record the units of energy consumed in the month. The period between two such consecutive readings shall be reckoned as one month, for the purpose of calculation of electricity duty and submission of returns under rule 4 :

Provided that for the purpose of calculation of electricity duty payable by a consumer in respect of the period commencing on the 1st day of April 1949 and ending on the day on which his meter is read for the first time thereafter, the units of energy consumed by such consumer during the said period shall be determined on the basis of the daily average consumption of the units of energy recorded as consumed during the month immediately preceding the day on which the meter is read as aforesaid.

(2) Every consumer shall allow a licensee or any person authorised by him in writing in this behalf, for the purpose of reading, or testing the reading of meters, to enter, between sunrise and sunset, any premises in which a meter is or is believed to be installed.

For the purposes of this sub-rule a meter shall include a sub-meter installed under rule 10.

9. *Adjustments.*—A licensee shall make allowance for fast and slow meters and incorrect readings.

9-A. *Special provisions for persons generating energy for their own use.*—(1) Every person who generates energy for his own use and who is liable to pay electricity duty under sub-section (*4*) of section 6 of the Act shall instal a meter in connection with the energy so generated and maintain it in proper order ; and

(2) If an inspecting officer has reason to doubt the accuracy of any meter installed under sub-rule (1), he shall refer the matter to the Electric Inspector appointed under section 36 of the Indian Electricity Act, 1910. The Electric Inspector or any person deputed by him in this behalf may thereupon enter the premises of such person for the purpose of testing the meter.

10. *Provision of separate meters.*—Where there are combined installations supplying energy both for—

(*i*) lights and fans, and

(*ii*) for any other purposes, or

wherever energy is consumed

(*i*) which is exempt from electricity duty under any of the items of exemption specified in the second schedule to Part II of the Act, and

(*ii*) in respect of which electricity duty is leviable,

the consumer shall instal separate meters or sub-meters for indicating the two kinds of consumption separately :

Provided that if any consumer satisfies the Collector that the installation and operation of such separate meters or sub-meters involve cost disproportionate to the amount of electricity duty leviable from him per month, and furnishes to the Collector such data and information, which in the opinion of the Collector, in consultation with the Electrical Engineer to Government, is necessary for the assessment of the said duty the Collector may exempt such consumer from the requirement of this rule. A consumer exempted under this proviso shall communicate to the Collector every addition to the number, and every increase in the power, of lights and fans used by him within seven days of such addition or increase.

10-A. *Lights and fans in industrial undertakings.*—Electricity duty on the units of energy consumed by any industrial undertaking for the purposes of lights and fans used for its undertaking shall be levied at the rate specified for any other purpose in the First Schedule to Part II of the Act :

Provided that nothing in this rule shall apply to lights and fans used for residential and office purposes by such undertaking.

11. *Collector to decide dispute between licensee and consumer.*—In the case of a dispute between a licensee and a consumer, regarding the liability of the consumer for the payment of the electricity duty or exemption therefrom, the Collector shall decide the matter, and his decision shall be final and conclusive.

12. *Submission of returns prior to coming into operation of the rules.*—Notwithstanding anything contained in the foregoing rules, a licensee shall submit the returns referred to in rule 4, for the period prior to the date on which these rules come into operation, on such date as the Collector may direct in this behalf.

13. *Application of rules in the case of supply of energy by a person other than a licensee.*—The aforesaid rules shall apply *mutatis mutandis* to any person who generates energy for his own use and who is liable to pay electricity duty under sub-section (*4*) of section 6 of the Act and to payment of duty by such person for the energy so generated by him.

FORM A.

[*See* section 7 and rule 4.]

Monthly Return showing information regarding energy supplied/consumed, electricity duty charged thereon, recovered and paid to Government during the month of 19 .

		Units.
Total quantity of energy supplied/consumed—		
(1) For lights and fans		
(2) For power		
(3) For domestic appliances		
(4) For other purposes, if any		
Less quantity of energy for lights and fans supplied		
	Units.	
Exempted : Sold to		
1. Government, save in respect of premises used for residential purposes.		
2. A railway administration as defined in clause 6 of section 3 of the Indian Railways Act, 1890, save in respect of premises used for residential purposes.		
3. A local authority save in respect of premises used for residential purposes.		
4. A tramway company, save in respect of premises used for residential or office purposes.		
5. [*Deleted.*]		
6. A hospital or dispensary which is not maintained for private gain.		
7. [*Deleted.*]		
Total ...		
Total net units ...		
	Rs.	

	Rs. a. p.	Rs. a. p.
Amount of electricity duty for units as shown above ...		
Less : Adjustments allowed as per Schedule attached ...		
Less : Transfer to disconnected ledgers		
Plus : Recoveries from consumers disconnected ...		
Amount paid into Treasury under Challan No. dated		

Schedule.

[Here state adjustments allowed by licensee.]

FORM B.

(*See* section 7 and rule 4.)

Monthly return showing particulars of consumers of energy and the amount of electricity duty found irrecoverable from them during the month of 195 .

Name and address of the consumer. 1	Units consumed for lights and fans. 2	Units consumed (1) for power, (2) for domestic appliances (3) for other purposes, if any. 3	Amount of electricity duty. 4	Period for which electricity duty is payable. 5	Reference to Ledger Account No. 6	Remarks (Action taken, if any by the licensee for recovery.) 7
			Rs. a. p.			

Pt. II Sch. I

G. N., F. D., No. 9326-A (2), dated 31st March 1938 (B. G., Pt. I, pp. 526-527).

In exercise of the powers conferred by clause (*a*) of the First Schedule to Part II of the Bombay Finance Act, 1932 (Bom. II of 1932), the Government of Bombay is pleased to specify in the schedule hereto annexed the areas in which electricity duty at the rate of nine pies for each unit of energy consumed shall be levied with effect from the 1st day of April 1938.

SCHEDULE.

The area of supply in which under the terms and conditions of a licence granted under section 3 of the Indian Electricity Act, 1910, or any place in any other area in which under section 27 of the said Act, a licensee, holding any of the licences mentioned below is authorised to supply energy.

Licences.

(1) The Ahmedabad City Municipality and District Local Board Electric License.
(2) The Surat City Municipality and District Local Board Electric License.
(3) The Thana Electric License.
(4) The Bhiwandi Electric License.
(5) The Kalyan Electric License.
(6) The Poona Electric License.
(7) The Belgaum Electric License.
(8) The Bombay Suburban Electric License.

G. N., F. D., No. 9326-A(2), dated 31st March 1939 (B. G., Pt. I, p. 784). **Pt. II, Sch. I.**

Amended by G. N., F. D., No. 9326-S.T., dated 1st May 1950.

In exercise of the powers conferred by clause (*a*) (2) in the First Schedule to Part II of the Bombay Finance Act, 1932 (Bom. II of 1932), and in respect of the areas specified in column I of the Schedule hereto appended, the Government of Bombay is pleased to specify the rates in columns 2, 3 and 4 of the aforesaid schedule as the rates at which the electricity duty shall be levied with effect from the 1st April 1939 :—

Schedule.

The area of supply in which under the terms and conditions of a licence granted under section 3 of the Indian Electricity Act, 1910, or any place in any other area in which under section 27 of the said Act a licensee holding any of the licences mentioned is authorised to supply energy.	For each unit of energy consumed for the use of a cinema house or theatre.	For each unit of energy consumed for any other purpose.	
		where the total consumption per mensem does not exceed 12 units.	where the total consumption per mensem of unit exceeds 12 units.
(1) The Ahmedabad City Municipality and District Local Board Electric Licence.	¾ annas per unit.	1 anna per unit.	1¼ annas per unit.
(2) The Surat City Municipality and District Local Board Electric Licence.	Do.	Do.	Do.
(2A) The Baroda City Municipality Licence ..	Do.	Do.	Do
(3) The Bombay Suburban Electric Licence ..	Do.	¾ anna per unit.	Do.
(4) The Poona Electric Licence	Do.	Do.	Do.
(5) The Thana Electric Licence	Do.	1 anna per unit.	Do.
(6) The Bhiwandi Electric Licence	Do.	*Nil.*	¾ anna per unit.
(7) The Belgaum Electric Licence	Do.	Nil.	Do.
(8) The Kalyan Electric Licence	Do.	1 anna per unit.	¼ annas per unit.
(9) The Ahmednagar Electric Licence	½ anna per unit.	½ anna per unit.	¾ anna per unit.
(10) Rander Electric Licence	Do.	Do.	Do.
Other areas	Do.	Nil.	½ anna per unit.

Pt. II, Sch. I

G. N., F. D., No. 9326-A(3), dated 31st March 1939 (B. G., Pt. I, p. 785).

In exercise of the powers conferred by Clause (*b*) in the First Schedule to Part II of the Bombay Finance Act, 1932 (Bom. II of 1932), the Government of Bombay is pleased to prescribe the rates specified in column 2 of the Schedule hereto appended for the lamps of the watts specified in column 1 of the said Schedule as the rates at which the electricity duty shall be levied with effect from the 1st April 1939 on the said lamps in respect of all the premises not exempted under the proviso to section 5 and the Second Schedule, when flat rates are charged by the licensee :—

Schedule.

1	2
	Annas per mensem.
Every lamp of less than 30 watts ...	2
Every lamp of 30 watts or more but less than 40 ...	3
Every lamp of 40 watts or more but less than 60 ...	4
Every lamp of 60 watts or more but not exceeding 100 ...	6
and for every additional 15 watts or fraction thereof in excess of 100 in any lamp	1

SS. 16 & 17 (c)

G. N., F. D., No. 9326-A(4), dated 31st March 1939 (B. G., Pt. I, p. 785).

Amended by G. N., F. D., No. 9326-A, dated 13th March 1940.
Modified by G. N., F. D., No. 9326-S.T.(3), dated 1st April 1949.

In exercise of the powers conferred by section 16 of the Bombay Finance Act, 1932 (Bom. II of 1932), the Government of Bombay is pleased to direct that Part V of the said Act shall extend to the cities of Surat and Sholpur and all other urban areas in the State of Bombay excluding such areas as are declared by the State Government to be periodical municipal districts under section 6 of the Bombay District Municipal Act, 1901.

In exercise of the powers conferred by section 17(*c*) of the said Act, the Government of Bombay is further pleased to declare that the areas mentioned in the Schedule shall for the purposes of Part V of the said Act be included in the cities of Bombay, Surat and Sholapur respectively :—

Schedule.

Cities.	Areas.
(1) Bombay ...	The town and Island of Bombay.
(2) Surat ...	The limits of the municipal borough of Surat.
(3) Sholapur ...	The limits of the municipal borough of Sholapur.

SS. 16 & 17 (c)

G. N., F. D., No. 9326-St. (3), dated 1st April 1949 (B. G., Pt. I, p. 1686).

In exercise of the powers conferred by sections 16 and 17(c) of the Bombay Finance Act, 1932 (Bom. II of 1932), and in modification of Government Notification, Finance Department, No. 9326-A(4), dated the 31st March 1939, in so far as it relates to the urban areas specified in column 2 of the Schedule hereto appended, the Government of Bombay is pleased to declare that with effect from the 1st April 1949 the

said urban areas shall for the purpose of Part V of the said Act be deemed as Cities bearing the names respectively specified against them in column 1 thereof :—

Schedule.

Cities. 1	Areas. 2
(1) Bandra ...	The limits of the Municipal borough of Bandra.
(2) Kurla ...	The limits of the Municipal borough of Kurla.
(3) Vile-Parle-Andheri ...	The limits of the Municipal borough of Vile-Parle-Andheri.
(4) Ghatkopar-Kirol ...	The limits of the Municipal borough of Ghatkopar-Kirol.

G. N., F. D., No. 9326-ST. (1), dated 1st April 1949 (B. G., Pt. I, p. 1686). **S. 22**

Amended by G. N., F. D., No. 9326/ST., dated 17th June 1949.

In exercise of the powers conferred by section 22 of the Bombay Finance Act, 1932 (Bom. II of 1932,), and in supersession of Government Notification, Finance Department, No. 9326-A, dated the 17th April 1939, as amended by Government Notification, Finance Department, No. 9326-A, dated the 30th March 1946, the Government of Bombay is hereby pleased to declare and notify that, with effect from the 1st day of April 1949, the rate at which the Urban Immoveable Property Tax shall be levied and paid to the State Government shall be as follows :—

(*a*) On buildings and lands in the City of Bombay, the annual letting value of which does not exceed Rs. 2,000 ;	3½ per cent. of the annual letting value of such buildings or lands ;
(*b*) On buildings and lands in the areas specified in the Schedule, the annual letting value of which does not exceed Rs. 1,000 ;	3½ per cent. of the annual letting value of such buildings or lands ;
(*c*) On buildings and lands in the City of Bombay the annual letting value of which exceeds Rs. 2,000 ;	7 per cent. of the annual letting value of such buildings or lands ;
(*d*) On buildings and lands in the areas specified in the Schedule, the annual letting value of which exceeds Rs. 1,000.	7 per cent. of the annual letting value of such buildings or lands.

Schedule.

(*i*) The Thana, Kurla, Bandra, Ahmedabad, Poona City, Poona Suburban, Parle-Andheri and Ghatkopar-Kirol Municipal boroughs ;

(*ii*) The Juhu Municipal district ;

(*iii*) The Malad, Kandivali and Borivali notified areas ;

(*iv*) The Chembur village in the Bombay Suburban District, the Mulund and Bhayandar villages in the Thana District and the Sabarmati village in the Ahmedabad District ; and

(*v*) The Ahmedabad, Poona and Kirkee cantonments.

.s 29 **G. N., R. D., No. 1031/39, dated 4th July 1939 (B.G., Pt. I, p. 1908).**

In exercise of the powers conferred by section 29 of the Bombay Finance Act, 9 32 (Bom. II of 1932), and of all other powers enabling it in this behalf, the Government of Bombay is hereby pleased to make the following rule, namely :—

The Urban Immoveable Property tax shall be remitted entirely in respect of the following :—

(*i*) lands and buildings, in the City of Bombay, the annual letting value of which is less than Rs. 500 ; and

(*ii*) lands and buildings, in the areas mentioned in section 20 (*ii*), (*iii*), (*iv*) and (*v*) of the said Act, the annual letting value of which is less than Rs. 200.

s. 29 **G. N., R. D., No. 1031/39, dated 6th January 1941 (B. G., Pt. IV-B, p. 2).**

In exercise of the powers conferred by section 29 of the Bombay Finance Act, 1932 (Bom. II of 1932), the Government of Bombay is hereby pleased to make the following rule, namely :—

"If the annual letting value of any building for land in respect of which the Urban Immoveable Property Tax is levied is reduced by a competent authority, the municipality shall give refund of such portion of the tax as shall be equal to the difference between the amount of the tax levied and the amount of the tax leviable on the annual letting value so reduced."

s. 29 **G. N., R. D., No. 1031/39, dated 24th July 1941 (B. G., Pt. IV-B, p. 630).**

In exercise of the powers conferred by section 29 of the Bombay Finance Act, 1932 (Bom. II of 1932), and in supersession of the Government Notification in the Revenue Department No. 1031/39, dated 22nd November 1939, as amended by Government Notification No. 1031/39, dated 21st February 1940, the Government of Bombay is pleased to make the following rules in respect of the matters mentioned in clauses (*c*) and (*d*) of sub-section (*2*) of section 29 of the said Act, namely :—

(1) All sums collected by any municipality on account of the Urban, Immoveable Property tax during any calendar week shall be paid by it into a Government treasury before the expiry of the following week.

(2) The amount of refund or remission of the Urban Immoveable Property tax, payable in respect of any building or land under sub-section (*1*), (*1A*) or (*1B*) of section 27 of the Bombay Finance Act, 1932, shall be such as bears to the total amount of the said tax levied in respect of such building or such land the same proportion as the amount of drawback, refund or remission of the property tax, sanctioned or granted by the Municipal Corporation of Bombay, the Municipality concerned or the Cantonment of Ahmedabad, as the case may be, bears to the total amount of the property tax levied in respect of such building or such land :

Provided that in cases in which a drawback of the property tax levied for the half year commencing from the 1st day of October 1939 is sanctioned in respect of any building or land, the amount of refund or remission of the Urban Immoveable Property tax payable in respect of such building or land for such half year shall be one-half of the amount payable under this rule.

G. N., R. D., No. 1031/39, dated 29th January 1942 (B. G., Pt. IV-B, p. 57). S. 29(2)(b) & (e)

In exercise of the powers conferred by clauses (*b*) and (*e*) of sub-section (*2*) of section 29 of the Bombay Finance Act, 1932 (Bom. II of 1932), the Government of Bombay is pleased to make the following rules, namely :—

(1) The Municipalities and Notified Area Committees mentioned below shall be entitled for the cost of collection of the Urban Immoveable Property Tax to an amount of rebate calculated at the rates shown below against them :—

Name of Municipality or Notified Area Committee.	Percentage of the amount of the tax collected in 1939-40.	Percentage of the amount of the tax collected in 1940-41.	Percentage of the amount of the tax collected in 1941-42.
1	2	3	4
(1) The Municipal Corporation for the City of Bombay	1½	1½	2
(2) Bandra Borough Municipality	2	2	2
(3) Juhu Municipality	4½	4½	3
(4) Thana Borough Municipality	2	2	2½
(5) Ahmedabad Borough Municipality	2¼	2¼	2¼
(6) Kurla Borough Municipality	1	2	2
(7) Parle-Andheri Municipality	1	1	1¼
(8) Chembur Notified Area Committee	1	1	3
(9) All other Municipalities and Notified Area Committees in Bombay Suburban District except the Ghatkopar-Kirol Municipality.	1	1	1

(2) Subject to adjustment, on the closing of the accounts for each year, on the basis of the amount of tax actually collected during the year, the amount of rebate shall be paid to the Municipalities and Notified Area Committees mentioned below on the basis of the estimated demand for the year in the manner specified below against them :—

Name of Municipality or Notified Area Committee.	Manner of payment.
The Municipal Corporation of the City of Bombay	Monthly instalments.
The Borough Municipalities of Ahmedabad, Bandra, Kurla and Thana and the Municipality of Vile Parle ...	Quarterly instalments.
All other Municipalities and Notified Area Committees in the Bombay Suburban District. ...	One annual payment.

S. 29 (2) (aa) Urban Immovable Property Tax (Determination of Annual Letting Value) Rules.

G. N., R. D., No. 1031/39, dated 7th February 1942 (B. G., Pt. IV-B, p. 62).

In exercise of the powers conferred by clause (*aa*) of sub-section (*2*) of section 29 of the Bombay Finance Act, 1932 (Bom. II of 1932), and in supersession of Government Notification, Revenue Department, No. 1031/39, dated the 7th November 1939, the Government of Bombay is pleased to make the following rules namely :—

Preliminary.

1. (1) These rules may be called the Urban Immovable Property Tax (Determination of Annual Letting Value) Rules.

(2) They shall come into force in the village of Sabarmati at once. They shall come into force in the villages of Chembur, Mulund and Bhayandar with effect from the date on which village panchayat is constituted in such village under the Bombay Village Panchayats Act, 1933.

2. In these rules, unless there is anything repugnant in the subject or context—

(*a*) " Act " means the Bombay Finance Act, 1932.

(*b*) " Mamlatdar " includes a Mahalkari.

(*c*) Words and expressions used in these rules but not defined shall have the meanings assigned to them in the Act.

Assessment List.

3. Subject to any general or special orders of the Collector, the Mamlatdar shall prepare an assessment list of all the buildings or lands or both, as the case may be, situated within the village, containing, *inter alia*, the annual letting value of such buildings or lands or both.

4. When the assessment list has been completed, the Mamlatdar shall give public notice thereof, and of the place where the list or a copy thereof may be inspected. Any person claiming to be the owner, lessee or occupier of any property included in the list or any authorised agent of such person may inspect the list and make extracts therefrom free of charge.

5. (1) The Mamlatdar shall, at the time of publication of such assessment list give public notice of a date, not less than fifteen days thereafter, when he will proceed to consider the valuation entered in the assessment list.

(2) Any objection to such valuation shall be made in writing to the Mamlatdar before the date fixed in the notice, and shall state in what respect the valuation is disputed.

(3) The person making any objection under sub-rule (2) shall be allowed an opportunity of being heard either in person or by an authorised agent.

6. (1) When all the objections made under rule 5 have been disposed of and the revision, if any, of the valuation has been completed, the assessment list shall be deposited in the chavdi or such other public place as may be considered suitable by the Mamlatdar.

(2) The assessment list so deposited shall then be open for inspection free of charge during office hours to all owners, lessees and occupiers of property comprised therein or the authorised agents of such persons and a public notice that it is so deposited and open for inspection shall forthwith be given.

7. Subject to such amendments as may be made in the assessment list under rule 8 and to the result of any appeal made under rule 9 the entries in the assessment list deposited as provided in rule 6 shall be accepted as conclusive evidence of the annual letting value of all buildings and lands to which such entries respectively refer.

8. (1) The Mamlatdar may amend the assessment list at any time—

(*a*) by inserting or omitting the name of any person whose name ought to have been or ought to be inserted or omitted, or

(*b*) by inserting or omitting any property which ought to have been or ought to be inserted or omitted, or

(*c*) by altering the valuation of any property which has been erroneously valued through fraud, accident or mistake, or

(*d*) by revaluing any property the value of which has been increased :

Provided that no person shall by reason of any such amendment become liable to pay any increase of the Urban Immoveable Property tax in respect of any period prior to the commencement of the year in which the amendment is made.

(2) Before making any amendment under sub-rule (1), the Mamlatdar shall give to any person who would be affected by the amendment a notice of not less than one month that it is proposed to make the amendment.

(3) Any person interested in any such amendment may tender an objection to the Mamlatdar in writing before the time fixed in the notice, and shall be allowed an opportunity of being heard in support of the same in person or by authorised agent.

Appeals.

9. An appeal against any valuation made under these rules shall lie to the Assistant Collector or the Deputy Collector as the case may be.

10. No appeal shall be entertained unless it is made within fifteen days of the date on which the assessment list is deposited in a public place as provided for in rule 6 :

Provided that an appeal may be admitted after the expiration of the period prescribed therefor by this rule, if the appellant satisfies the appellant authority that he had sufficient cause for not preferring the appeal within such period.

11. The order of the appellate authority confirming, setting aside or modifying any valuation made under these rules shall be final.

S. 29 (2) (b) & (c)

G. N., R. D., No. 1031/39, dated 4th January 1944.

Modified by G. N., R. D., No. 1031/39, dated 25th June 1945.

Amended by G. N., R. D., No. 2044/45, dated 12th January 1948.

In exercise of the powers conferred by clauses (*b*) and (*c*) of sub-section (*2*) of section 29 of the Bombay Finance Act, 1932 (Bom. II of 1932), the Government of Bombay is pleased to make the following rules, namely :—

(1) The Municipalities and Notified Area Committees mentioned below shall be entitled for the cost of collection of the Urban Immoveable Property Tax to an amount of rebate calculated at the rates shown below against them :—

Name of Municipality or Notified Area Committee.	Percentage of the amount of the tax collected in 1943-44 and onwards.
(1) The Municipal Corporation for the City of Bombay ...	2
(2) Bandra Borough Municipality	2
(3) Juhu Municipality	3½
(4) Thana Borough Municipality	2½
(5) Ahmedabad Borough Municipality	2¼
(6) Kurla Borough Municipality	2
(7) Parle-Andheri Municipality	1¼
(8) Ghatkopar Kirol Municipality	2
(9) The Poona City Borough Municipality	2¼
(10) The Poona Suburban Borough Municipality	2¼
(11) Chembur Notified Area Committee	3½
(12) Borivli, Kandivli, Mulund and Malad Notified Area Committees	2
(13) All other Municipalities and Notified Area Committees in Bombay Suburban District	1

(2) Subject to adjustment on the closing of the accounts for each year, the amount of rebate shall be paid to the Municipalities and Notified Area Committees mentioned below on the basis of the actual collections in the manner specified against them :—

Name of Municipality or Notified Area Committee.	Manner of payment.
The Municipal Corporation of the City of Bombay ...	Monthly instalments.
The Borough Municipalities of Ahmedabad, Bandra, Kurla and Thana, the Poona City and Poona Suburban Borough Municipalities and the Municipality of Vile Parle	Quarterly instalments.
All other Municipalities and Notified Area Committees in the Bombay Suburban District	One annual payment.

G. N., R. D., No. 1031/39, dated 25th June 1945 (B. G., Pt. IV-B, p. 106). S. 29(2), (b) & (c)

In exercise of the powers conferred by clauses (*b*) and (*c*) of sub-section (*2*) of section 29 of the Bombay Finance Act, 1932 (Bom. II of 1932), the Government of Bombay is pleased to make, in modification of Government Notification No. 1031/39, dated 4th January 1944, the following rule, namely :—

The Thana Borough Municipality shall be entitled for the cost of collection of the urban immoveable property tax with effect from 1st April 1944 to an amount of rebate calculated at the rate of 3 per cent. of the amount of the tax collected in 1944–45 and thereafter.

G. N., F. D., No. 7493/33-ST, dated 23rd December 1949 (B. G., Pt. I, p. 7991). S. 36

In exercise of the powers conferred by section 36 of the Bombay Finance Act, 1932 (Bom. II of 1932), the Government of Bombay is pleased to exempt totally, the classes of advertisements specified in the Schedule appended hereto, from the payment of the tax.

Schedule.

1. Advertisements appearing in any newspaper published after the 31st December 1949 (1) by any School, College, or University, or (2) by an institution or association which, in the opinion of an officer authorised by the State Government in this behalf, is formed or conducted for any religious, charitable or educational purposes other than those specified in clause (1).

2. Advertisements appearing in any newspaper published—

(*i*) between the 1st January 1950 and the 31st March 1950 :

Provided that—

(*a*) an issue of such newspaper is priced at a rate not exceeding two annas per copy ; and

(*b*) the average circulation (including free copies) of such newspaper during the period from the 1st January 1949 to the 31st December 1949 did not exceed 1,000 copies per publication ;

(*ii*) in any financial year after the 31st March 1950 :

(*a*) an issue of such newspaper is priced at a rate not exceeding two annas per copy ; and

(*b*) the average circulation (including free copies) of which has not exceeded 1,000 copies per publication during the immediately preceding calendar year.

G. N., F. D., No. 7494/33-ST, dated 28th May 1949 (B. G., Pt. IV-B, p. 1106). S. 40 Bombay Newspaper Advertisements Tax Rules, 1949.

In exercise of the powers conferred by section 40 of the Bombay Finance Act, 1932 (Bom. II of 1932), the Government of Bombay is pleased to make the following rules, namely :—

CHAPTER I.

PRELIMINARY.

1. These rules may be called the Bombay Newspaper Advertisements Tax Rules, 1949.

2. In these rules, unless there is anything repugnant in the subject or context,—

(*a*) " Act " means the Bombay Finance Act, 1932 ;

(*b*) " Section " means section of the Act ;

(*c*) "Form" means form appended to these rules;

(*d*) "Government Treasury" means in Greater Bombay, the Reserve Bank of India, Bombay, and in other places the treasury or the sub-treasury of the district or taluka;

(*e*) "Newspaper Office" means any place in which a newspaper is published or printed or at which the records or accounts of a newspaper are kept.

CHAPTER II.

NEWSPAPER ADVERTISEMENTS TAX AUTHORITIES.

3. (1) For carrying out the purposes of Part VII of the Act, the State Government may appoint,—

(*a*) a Chief Newspaper Advertisements Tax Officer;

(*b*) Supervising Newspaper Advertisements Tax Officers;

(*c*) Newspaper Advertisements Tax Officers; and

(*d*) Inspectors.

(2) In addition to the powers and duties conferred by these rules, such officers shall also exercise such powers and perform such duties as the State Government may from time to time direct.

CHAPTER III.

PROCEDURE REGARDING ASSESSMENT AND COLLECTION OF TAX.

4. (1) The manager of every newspaper published in the State of Bombay shall issue or cause to be issued a bill or cash memorandum bearing a distinctive number signed and dated by him or his servant, or agent to the person on whose behalf one or more advertisements or other matter are inserted in the newspaper for payment made or to be made, showing the date of the issue, particulars of the advertisement inserted, the amount payable, and the amount of tax charged separately, if any, and shall keep the counterfoil or duplicate of such bill or cash memorandum duly signed and dated and preserve it for a period of not less than two years from such date.

(2) The manager shall also maintain or cause to be maintained a true account in respect of all matter appearing in his newspaper for which any amount is paid or payable, showing therein the amount paid or payable, and the amount of tax charged separately, if any, and if the Chief Newspaper Advertisements Tax Officer considers that such account is not sufficiently clear or intelligible for making a proper check of the returns furnished by the manager under section 33 he may require such manager by notice in writing to keep such account in such manner as may be specified by him.

5. (*a*) A return under section 33 shall be in form II and shall be furnished to the Newspaper Advertisements Tax Officer, having jurisdiction over the area in which the newspaper office is situated. The return shall be signed by the manager or such person as the manager may, by notice to the Newspaper Advertisements Tax Officer, nominate for the purpose, and shall be verified by the person signing it as being true to the best of his knowledge and belief.

(*b*) If the manager having furnished a return under sub-rule (*a*) discovers any omission or wrong statement therein, he may furnish a revised return before the expiry of the month following the month to which the return relates.

6. The amount of tax due according to a return furnished or to be furnished under section 33 shall be paid each month into a Government Treasury and the manager or other person nominated by him under rule 5 shall furnish the Newspaper Advertisements Tax Officer with the receipted treasury chalan showing such payment within 15 days from the close of the month for which the payment is due.

7. (1) When proceeding under sub-section (2) of section 34, the Newspaper Advertisements Tax Officer shall serve on the manager a notice in form II requiring him on a date not less than ten days from the date of issue of the notice and at a place specified therein either to attend in person or by an agent authorised in writing and to produce or cause to be produced the books of accounts and such other documents as may be specified in the notice and any other evidence on which such manager may rely in support of such returns, if any, as he may have furnished and to furnish such further information as may be specified in the notice. On the day specified in the notice or as soon afterwards as may be, the Newspaper Advertisements Tax Officer shall, after examining the accounts and documents produced and the information furnished and hearing such evidence as the manager may bring and such other evidence as the Newspaper Advertisements Tax Officer may require on specified points, assess the amount of tax payable by the manager.

(2) If a manager fails to comply with the requirements of a notice issued under sub-rule (1), the Newspaper Advertisements Tax Officer shall assess to the best of his judgment the amount of tax payable by such manager.

8. (1) When the amount of tax payable by the manager of any newspaper in respect of any period has been assessed, the Newspaper Advertisements Tax Officer shall issue a notice to such manager in form III for the payment of the amount assessed or such part thereof as remains unpaid.

(2) Within ten days of the service of such notice, the manager shall pay the amount specified therein into a Government treasury and shall by such date as may be specified in the notice, furnish the Newspaper Advertisements Tax Officer with the receipted treasury chalan showing such payments.

(3) If the amount already paid as tax in respect of any period exceeds the amount assessed under section 34 or in an appeal, if any, under section 35, the Newspaper Advertisements Tax Officer shall issue in favour of the manager an order on the Treasury Officer for refund of the excess amount to the manager.

9. If after the period allowed under rule 8 the amount of tax assessed or any part thereof remains unpaid, the Newspaper Advertisements Tax Officer shall apply to the Collector of the area in which the newspaper office is situated or in which the manager resides or owns any property, for the recovery of the amount remaining unpaid, as an arrear of land revenue, and the Collector shall report to the Newspaper Advertisements Tax Officer by the tenth of each month, the amount of tax recovered by him.

10. Every Newspaper Advertisements Tax Officer shall maintain an account in form IV in respect of each newspaper in his jurisdiction in which he shall record the receipt of every chalan produced in proof of payment of tax by the manager, the amounts of tax assesssed under section 34 or 35, and the amounts recovered or refunded under sub-rules (2) and (3) of rule 8.

11. Every Newspaper Advertisements Tax Officer shall maintain a register in form V showing the payment of tax by the managers of newspapers in his jurisdiction.

CHAPTER IV.

PROCEDURE REGARDING INSPECTION.

12. (1) Any Officer appointed under rule 3 shall have the powers specified in section 37 in respect of newspapers published or printed in his jurisdiction, provided that an Inspector shall not exercise such powers unless he possesses a specific warrant in form VI from the Newspaper Advertisements Tax Officer to whom he is subordinate, authorising him so to do.

(2) Subject to the provisions of sub-rule (1), any officer appointed under rule 3 may within the limits of his jurisdiction—

(*a*) enter any place which he has reason to believe to be used for publishing or printing a newspaper or for keeping the records or accounts of a newspaper, and examine any records and accounts maintained, in so far as they are relevant to the purposes of Part VII of the Act;

(*b*) record statement of any person whom he may deem necessary to examine for the proper discharge of his duties;

(*c*) call upon the manager to furnish within such time as may be specified, any information relating to the amounts paid or payable in respect of advertisements and such other information as may be necessary for carrying out the purposes of Part VII of the Act;

(*d*) exercise such other powers as may be reasonably necessary for carrying out the purposes of Part VII of the Act and of the rules made thereunder.

13. Unless the authority specified in rule 12 deems it necessary to make a surprise visit, he shall give reasonable notice in writing to the manager of his intention to enter a newspaper office for inspection and to examine the records and accounts in so far as they are relevant to the purposes of part VII of the Act; and such authority shall in fixing the date and time for this purpose, as far as possible, have due regard to the convenience of the manager.

CHAPTER V.

PROCEDURE REGARDING APPEALS.

14. (1) The Supervising Newspaper Advertisements Tax Officers shall be the appellate authority for the purpose of section 35 in respect of the orders of assessment made by the respective Newspaper Advertisements Tax Officers subordinate to them:

Provided that the Chief Newspaper Advertisements Tax Officer, may transfer any appeal from the file of a Supervising Newspaper Advertisements Tax Officer to himself or to another Supervising Newspaper Advertisements Tax Officer, and thereupon the Officer to whom the appeal is so transferred shall be the appellate Authority for such appeal. Any appeal transferred under this proviso may be again transferred to a Supervising Newspaper Advertisements Tax Officer or the Chief Newspaper Advertisements Tax Officer, if it is deemed necessary to do so.

(2) (*a*) An appeal from any order passed by the Supervising Newspaper Advertisements Tax Officer or the Chief Newspaper Advertisements Tax Officer shall lie to the Tribunal constituted under section 4 of the Bombay Sales Tax Act, 1946.

(*b*) Any two members of the Tribunal (including the President) shall form the quorum for hearing and deciding the appeals. Interim applications may be heard and disposed of by one or more members of it who may be present.

(*c*) Subject to the previous approval of the State Government, the Tribunal shall frame regulations (consistent with the Act and these Rules) for regulating its procedure and disposal of its business.

15. (1) Every appeal shall—

(*a*) be in writing;

(*b*) specify the name and address of the appellant;

(*c*) specify the date of the order appealed against;

(*d*) contain a clear statement of the facts;

(*e*) state precisely the relief prayed for; and

(*f*) be signed and verified by the appellant or agent duly authorised in writing in this behalf by the appellant in the following form namely :—

"I.....the appellant, named in the above memorandum of appeal do hereby declare that what is stated therein is true to the best of my knowledge and belief.

Signature."

(2) The memorandum of appeal shall be accompanied by the order appealed against in original or a certified copy thereof, and a certificate from the Newspaper Advertisements Tax Officer that the amount of tax assessed, has been duly paid up, unless the omission to produce such order or copy or certificate is explained at the time of presentation of the appeal to the satisfaction of the appellate authority.

(3) The memorandum of appeal shall either be presented to the appellate authority by the appellant or his agent or sent to it by registered post.

16. (1) If the memorandum of appeal does not comply with all the requirements of rule 15 the appeal may be summarily rejected:

Provided that no appeal shall be summarily rejected under this sub-rule unless the appellant is given such opportunity as the appellate authority thinks fit to amend such memorandum, so as to comply with the requirements of rule 15.

(2) An appeal may also be summarily rejected on other grounds which should be recorded in writing by the appellate authority:

Provided that before an order summarily rejecting an appeal under this sub-rule is passed, the appellant shall be given a reasonable opportunity of being heard.

17. If the appellate authority does not reject the appeal summarily, it shall fix a date for hearing the appellant or his agent.

18. A certified copy of the order passed in appeal shall be sent to the Officer whose order forms the subject matter of the appeal proceedings.

CHAPTER VI.

MISCELLANEOUS.

19. (1) The manager of every newspaper which is published in the State of Bombay and which contains advertisements shall furnish the Newspaper Advertisements Tax Officer having jurisdiction over the place where it is published with

a declaration in form VII within thirty days from the 1st day of April 1949 or the date of first publication of his newspaper, whichever is later, signed and verified by him. He shall also within thirty days inform the Newspaper Advertisements Tax Officer of any change in the name of the newspaper or its ownership, or the place in which it is published or printed or at which its records or accounts are kept.

(2) The Newspaper Advertisements Tax Officer shall assign a reference number to each newspaper published within his jurisdiction and intimate the same to the manager. This reference number shall be quoted in the returns, notices and other communications if any pertaining to such newspaper where necessary.

20. (1) A notice under the Act or these rules may be served by any of the following methods :—

(*i*) by delivering or tendering it to the manager or his agent at the newspaper office, or,

(*ii*) by post :

Provided that if upon an attempt having been made to serve any such notice by any of the abovementioned methods, the authority concerned is satisfied that the party concerned is evading the service of notice or that for any other reason, the notice cannot be served by any of the abovementioned methods, the said authority shall cause such notice to be served by affixing a copy thereof at some conspicuous place in the newspaper office or at the residence of the party concerned, as far as may be known or ascertained, and such service shall be as effectual as if it had been made on the party concerned personally.

(2) When the Officer serving a notice delivers or tenders a copy of the notice to the party concerned personally or to his agent he shall require the signature of the person to whom the copy is so delivered or tendered as acknowledgment of service endorsed on the original notice. When the notice is served by affixing a copy thereof in accordance with the proviso to sub-rule (1) the officer serving it shall return the original to the authority which issued the notice with a report endorsed thereon or annexed thereto stating that he so affixed the copy, the circumstances under which he did so and the name and address of the person, if any, by whom the building in which the newspaper office or residence of the party concerned is located was identified, and in whose presence the copy was affixed. The said officer shall also obtain the signature or thumb impression of the person identifying the newspaper office or residence of the party concerned on his report.

(3) When service is made by post, the service shall be deemed to be effected by properly addressing, preparing and posting by registered post, the notice and, unless the contrary is proved, the service shall be deemed to have been effected at the time at which the notice would be delivered in the ordinary course of post.

(4) The authority at whose instance the notice was issued shall, if he is satisfied from the report of the messenger or the postal acknowledgement or by taking such evidence as he deems proper that the notice has been served in accordance with this rule, record an order to that effect. If he is not satisfied that the notice has been properly served he may, after recording an order to that effect, direct the issue of a fresh notice.

21. Any person who contravenes any provision of rules 4, 5 or 6 or sub-rule (1) of rule 19 or fails to comply with any requirement under rule 7 or 8 or sub-rule (2) of rule 12 shall be punishable with fine which may extend to fifty rupees.

FORM I.

(Rule 5.)

Form of Return of Newspaper Advertisements Tax.

Reference No. .....

Return for the month of ..... 19.....

Name of the Newspaper .....

Name of the Manager .....

Address .....

	Rs. a.
1. Gross amount paid or payable in respect of advertisements and other matter appearing in issues of the newspaper published during the month (excluding amount of tax charged separately, if any).	
2. *Less*—	
(*i*) Amount paid or payable in respect of matter other than advertisements, if any	
(*ii*) Amount paid or payable in respect of advertisements exempted under section 36 ..	
(*iii*) Amount claimed for adjustment in respect of returns for previous months on account of refunds due to cancellations, wrongful insertions etc. made during month of this return.	
Total ..	
3. Balance on which the tax is leviable ..	
4. Total amount charged separately as tax, if any ..	
5. Amount of tax payable on the balance shown against item 3 calculated to the nearest anna ..	
6. (*i*) Name of Government Treasury in which the amount of tax is credited ..	
(*ii*) Number and date of Chalan { Chalan No. ..... Date	

I ..... being the Manager authorised by the Manager ..... of the above newspaper, do hereby

solemnly affirm that the particulars stated above are true to the best of my knowledge and belief.

Signature .....

Status of the person signing.

Place .....

Date

return .....

To

The Newspaper Advertisements Tax Officer.

FORM II.

(Rule 7.)

Notice under Rule 7.

To

(Name) .....

(Address) .....

WHEREAS I desire to satisfy myself that the return(s) furnished by you in respect of (name of the newspaper).....
Reference No. .....for the month(s) of .....
is/are correct and complete, you are hereby directed to attend in person or by an agent authorised in writing at.....on.....
(Place) (Date)

at .....and to produce or cause to be produced the following
(time)

documents.

.....

.....

.....

and to furnish the following information—

.....

.....

.....

You may also produce any other evidence on which you rely in support of the return(s) furnished by you.

Signature.....,
Newspaper Advertisements Tax Officer,
.....

Seal.

Place.....

Date.....

FORM III.

(Rule 8.)

Notice under Rule 8.

To

.....

.....

You are hereby informed that the newspaper advertisements tax payable by you in respect of.....
(Name of the Newspaper office)
Reference No.....for the month(s).....
for the amounts paid or payable in respect of the advertisements appearing therein has been assessed at Rs.....

2. The amount already paid by you in respect of the said month(s) is Rs.....
.....and the balance due from you is Rs..... (.....
.....).

3. You are hereby directed to pay the above amount into a Government Treasury within ten days of the service of this notice and to furnish the receipt in proof of the payment to the undersigned not later than the.....
day of.....19..... ; failing which the said sum shall be recoverable from you as an arrear of land revenue.

Signature.....,
Newspaper Advertisements Tax Officer,
.....

Seal.

Place.....

Date.....

FORM IV.

(Rule 10.)

Account for newspaper Advertisements Tax in respect of.....

Ref. No.....

Date 1	Month of Return or period of recovery. 2	Name of Treasury. 3	No. and Date of Chalan of payment. 4	No. and Date of Collector's report. 5	Amount paid or recovered. 6	Date of assessment or refund order. 7	Period of assessment. 8	Name of Treasury. 9	No. and Date of encashment. 10	Amount assessed or refunded. 11	Remarks. 12

FORM V.

(See Rule 11.)

Progressive Collection and Refund Register.

MONTH.....

Serial No. 1	(*a*) Chalan No. Order No. (*b*) Collr.'s No. (*c*) Refund order No. 2	(*a*) Date of Payment. (*b*) Date of recovery. (*c*) Date of encashment. 3	Name of the Newspaper and Ref. No. 4	Amount paid with Return. 5	Amount paid after assessment. 6	Refunded. 7	Remarks. 8
				Rs. a.	Rs. a.	Rs. a.	

FORM VI.

(Rule 12.)

Warrant for Inspection of a Newspaper office by an Inspector.

Mr....., Inspector appointed under Rule 3 of the Bombay Newspaper Advertisements Tax Rules, 1949, is hereby authorised to enter the newspaper office known as.....at..... .....or any part thereof, on the.....day of..... .....of 194 or as soon thereafter as may be practicable, and to examine the working records and accounts of the said newspaper, and to take copies of or extracts from such records or accounts for the purpose of verification of the return(s) for the month(s) of.....and for obtaining necessary information for the purpose of the Act and the Rules made thereunder.

Seal.

Signature.....,

Newspaper Advertisements Tax Officer,

.....

Place.....

Date.....

FORM VII.

(Rule 19.)

Form of Declaration or Intimation under Rule 19.

To

The Newspaper Advertisements Tax Officer,

.....

I,.....Manager of..... ..... responsible for the publication of the said newspaper do hereby declare as under/intimate the following change(s) (para. 6) :—

*1. The said newspaper is published/is to be published at (Address)..... .....,....at intervals of.....*The first issue was/will be published on.....

*2. It is printed at (Address).....

*3. The records and accounts of the said newspaper are kept in its office at..... .....

(address)

*4. The ownership of the said newspaper vests in.....

*5. The names and addresses of the partners in the case of a firm ; *or of members of managing committee, Chairman, Secretary and other officers in the case of an association* ; or of the directors, manager, managing agent, Secretary and Chief Executive Officer in the case of a company* ; or of the owner of the newspaper are as under :—

Name. *Address.*

*6. [Statement of Change(s).]

I.....do solemnly affirm that the above information is true to the best of my knowledge and belief.

Place..... Signature.....

Date..... Status.....

*Strike out whichever is not applicable.

APPENDIX A.

Bombay Newspaper Advertisements Tax Tribunal Regulations, 1949.

G. N., F. D., No. 7494/33-ST., dated 25th January 1950 (B. G., Pt. IV-B, p. 165D).

The following regulations made by the Tribunal constituted under section 4 of the Bombay Sales Tax Act, 1946, in exercise of the powers conferred on it by rule 14 (2) (*c*) of the Bombay Newspaper Advertisements Tax Rules, 1949, and with the previous sanction of the State Government are hereby published for general information :—

REGULATIONS.

CHAPTER I.

General.

1. *Short title.*—These regulations may be called the Bombay Newspaper Advertisements Tax Tribunal Regulations, 1949.

2. *Definitions.*—In these regulations, unless there is anything repugnant in the subject or context,—

(*a*) " Act " means the Bombay Finance Act, 1932 ;

(*b*) " appeal " means a memorandum of appeal to the Tribunal filed under rule 14 (2) of the Rules ;

(*c*) " Form " means a form appended to these regulations ;

(*d*) " Government Agent " means an officer or pleader appointed by Government to receive on its behalf notices issued by the Tribunal and generally to appear, act and plead on its behalf in all proceedings before the Tribunal ;

(*e*) " legal representative " means a person who in law represents the estate of a deceased person and includes any person decided by the Tribunal to represent the deceased person in the proceedings pending before the Tribunal, unless and until a competent court has decided otherwise ;

(*f*) " pleader " means a pleader as defined in section 2 (*15*) of the Code of Civil Procedure, 1908 ;

(*g*) " President " means the President of the Tribunal ;

(*h*) "Registrar" means the person who is for the time being discharging the functions of the Registrar of the Tribunal;

(*i*) "Rules" means the Bombay Newspaper Advertisements Tax Rules, 1949, and the word "rule" shall be construed accordingly;

(*j*) "Tribunal" means the Tribunal constituted under section 4 of the Bombay Sales Tax Act, 1946;

(*k*) words and expressions used but not defined in these regulations shall have the meanings assigned to them in the Act and the Rules.

CHAPTER II.

Sittings and Office hours.

3. *Place of hearing.*—(1) The headquarters of the Tribunal shall be at Bombay.

(2) All appeals shall ordinarily be heard at Bombay:

Provided that the Tribunal may, by reason of great number of such appeals in respect of any area or for any other reason, hear them at any other convenient place in the State of Bombay.

(3) Sufficient notice about the sittings of the Tribunal outside Bombay shall be given by publication on the notice board of the Tribunal and in any two newspapers having circulation at the place where the sitting is to be held.

4. *Notice of date of hearing.*—The Registrar shall with the approval of the President, arrange for the sittings of the Tribunal for hearing the appeals and publish the days fixed for the hearing thereof on the notice board of the Tribunal sufficiently in advance.

5. *Office hours.*—The office of the Tribunal shall observe the same office hours as the other offices of the State Government. It shall remain closed on Sundays and such holidays as may be declared by Government for such offices.

CHAPTER III.

Presentation, Registration and Admission of Appeals.

6. *Presentation of appeals.*—(1) An appeal shall be presented by the appellant or by his pleader or duly appointed agent to the Registrar during office hours or sent to him by registered post.

(2) When such appeal is presented by a pleader or an agent, other than Government Agent whose appointment as such agent has been notified in the *Official Gazette*, it shall be accompanied by a letter of authority appointing him as such.

(3) Every such appeal shall be made in accordance with the provisions of the Act, the Rules and these regulations.

(4) Every appeal shall be accompanied by one certified copy and two uncertified copies of the order complained of and by three copies of the appeal, unless the production of any such copy is dispensed with by the President.

(5) Every appeal shall specify the name and address of the appellant and specify the Government of Bombay as the Respondent.

7. *Registration of appeals.* (1) On receipt of an appeal the Registrar shall endorse on it the date of its receipt. The Registrar shall, as soon as possible examine it and see—

(*i*) that the person presenting it has authority to do so, and

(*ii*) that it conforms with all the provisions of the Act, the Rules and these regulations.

If the Registrar is satisfied on these points he shall cause it to be registered in the Register in form A attached to these regulations.

(2) If the Registrar finds that the appeal presented to him does not conform with any of the said provisions he shall make a note on the appeal to that effect and may call upon the party concerned or his pleader or agent to remedy the defect within a period of 7 days of the receipt of notice to do so. The Registrar may, for good and sufficient cause, extend the period for the purpose of remedying the defect provided that if the extension of more than 7 days in the aggregate is sought for, the Registrar shall place the matter before the President and obtain his orders in that behalf.

(3) If the defect is remedied within the period allowed under sub-regulation (2), the Registrar shall cause the appeal to be registered in the register.

(4) If the party concerned or his pleader or his agent fails to remedy the defect within the said period the Registrar shall make his report to the Tribunal, and with the approval of the President, fix a date for the hearing, of which due notice shall be given to the party or his pleader or his agent.

(5) On the date so fixed, the Tribunal shall go through the relevant papers, hear the party, or his pleader or his agent, if present and pass suitable orders directing that the appeal be registered or rejecting it. Where the appeal is rejected, the Tribunal shall record its reasons for doing so.

(6) When an appeal has been ordered to be registered under this regulation the Registrar shall see that it is registered as soon as practicable and in any case not later than 7 days from the date of the order requiring it to be registered.

8. *Intimation of registration to the Chief Newspaper Advertisements Tax Officer.*—When an appeal has been registered under regulation 7, the Registrar shall, as shall, as soon as may be, send an intimation thereof in Form B to the Chief Newspaper Advertisements Tax Officer calling for the record and proceedings relating to such appeal, unless the papers are already in the office of the Tribunal.

9. *Admission.*—(1) On receipt of the record and proceedings of the appeal, the President shall go through the papers and if he is of the opinion that there is substance in the appeal, he shall admit it.

(2) If the President is of the opinion that there is no substance in such appeal, he shall direct that it be placed before the Tribunal for preliminary hearing on a date fixed by him of which notice shall be given to the appellant or to his pleader or his agent.

(3) A notice under sub-regulation (2) shall declare that if the party does not appear before the Tribunal either in person or through a pleader or an agent on the date mentioned in the notice, the appeal shall be heard and decided *ex parte.*

(4) On the date so fixed the Tribunal shall, after hearing the appellant, or his pleader or his agent, pass orders either admitting the appeal or dismissing it. Where the appeal is dismissed, the Tribunal shall record its reasons for doing so.

(5) Where the appellant or his pleader or his agent, as the case may be, is absent on the date fixed for the hearing, the Tribunal may dismiss the appeal for default or pass such orders as it deems just and proper.

CHAPTER IV.

Hearing, Adjournment and Judgment.

10. *Notice to respondent.*—After an appeal has been admitted, a notice shall be delivered or sent by post to the respondent calling upon him to appear before the Tribunal on the date specified in the notice. The notice shall also declare that if he does not appear before the Tribunal either in person or through a pleader or an agent on the date specified in the notice or on any subsequent date to which the hearing may be adjourned, the Tribunal shall hear and decide the appeal *ex parte.*

11. *Procedure at the hearing.*—On the date fixed or on any other day to which the hearing may be adjourned, the appellant or his pleader or agent shall ordinarily be heard first in support of his appeal. The respondent or his pleader or agent, shall if necessary, be heard next and in such case the appellant or his pleader or agent shall be entitled to reply.

12. *Hearing in the absence of parties.*—If, on the day fixed for hearing or on any other day, to which the hearing may be adjourned the appellant does not appear either in person or through his pleader or his agent when the appeal is called for hearing, the Tribunal may dismiss the appeal or may decide it on merits, after hearing the respondent or his pleader or agent, if present.

13. *Restoration of appeals decided ex parte.*—If any of the parties was absent at the date of the hearing, either preliminary or final, and the appeal was heard and decided *ex parte*, the party concerned may apply for restoration of the appeal and if the party satisfies the Tribunal that he had no notice of the date of the hearing or that he was prevented by any sufficient cause from appearing when the appeal was called for hearing the Tribunal may restore the appeal to its file, provided that where the other party had appeared in the appeal, such party shall be given notice and an opportunity of being heard before the order for restoration of the appeal is made.

14. *Fresh evidence and witnesses.*—(1) No party to an appeal shall be entitled to adduce fresh evidence, whether oral or documentary, before the Tribunal. The Tribunal may accept documents tendered by a party or call for them, if it is of opinion that they are necessary for deciding the appeal, provided that the other parties shall in that case may be entitled to produce rebutting evidence.

(2) If the Tribunal is of opinion that any witness should be examined, it may, instead of examining him before itself, ask the Chief Newspaper Advertisements Tax Officer to have him examined by the Newspaper Advertisements Tax Officer of the area from which the appeal is received and submit his deposition.

(3) Where fresh evidence has been adduced under sub-regulation (1) or a witness has been examined as provided in sub-regulation (2), the parties may, if they so desire, address the Tribunal on points arising out of the fresh evidence or the deposition of the witness.

15. *Adjournment.*—The Tribunal may on such terms as it thinks fit, and at any stage adjourn the hearing of any appeal.

16. *Procedure in case of death of appellant.*—If an appellant dies while the appeal is pending, his legal representatives shall apply within 90 days of his death to be substituted for the deceased appellant and for permission to continue the appeal. Otherwise the appeal will abate so far as he is concerned, and will be liable to be dismissed if he be the sole appellant.

17. *No abatement by reason of death after hearing.*—Notwithstanding anything contained in regulation 16 there shall be no abatement by reason of the death of any party between the conclusion of the hearing and the pronouncing of the judgment, but the judgment may in such case be pronounced notwithstanding the death and shall have the same force and effect as if it had been pronounced before the death took place. No legal representative need be made party in such case.

18. *Determination of legal representative.*—If a question arises in any appeal whether a person is or is not the legal representative of a deceased party, such question may be determined by the Tribunal in a summary way after taking evidence, if necessary.

19. *Procedure in case of insolvency.*—If a party becomes insolvent and his estate becomes vested in the assignee or receiver the latter may, by leave of the Tribunal, be made a party to the appeal.

20. *Abatement or dismissal for failure of legal representative, etc., to apply in time may be set aside.*—A person claiming to be the legal representative of a deceased appellant or the assignee or receiver of an insolvent appellant may apply within 60 days from the date of abatement or dismissal of the appeal to have the abatement or dismissal set aside and if it is proved to the satisfaction of the Tribunal that he was prevented by sufficient cause from appearing within time, the abatement or dismissal shall be set aside by the Tribunal and the appeal be proceeded with.

21. *Benches.*—(1) The President shall have power to constitute benches from among the members of the Tribunal, including himself, to hear any appeal.

(2) Such benches shall consist of two or more members, including the President Where a bench consists of three members, the opinion of the majority shall prevail and the decision shall be in accordance with the opinion of the majority. Where a bench consists of two members and if the two members differ, the appeal shall be referred for hearing to the third member who was not party to the original decision.

22. *Pronouncement of judgment.*—(1) When the hearing of an appeal is complete, the Tribunal shall pronounce its judgment forthwith or shall fix a date for the same, Such date shall be notified on the notice board of the Tribunal.

(2) Every judgment of the Tribunal shall be in writing.

23. *Unanimous or majority judgment.*—Where the judgment is unanimous, it shall be signed and dated by all the members and shall be pronounced in open court by the President or senior member present. Where it is a judgment of the majority, it shall be similarly signed and dated by the members forming the majority. The dissenting member shall also write his judgment and record his opinion on the point or points on which he dissents.

24. *Certain matters to be specified in the judgment.*—The Tribunal shall, in its judgment state at the end, whether the appeal is dismissed or allowed wholly or in part and mention the relief, if any, granted to the appellant.

25. *Costs.*—(1) The costs of the appeal shall be in the discretion of the Tribunal.

(2) In its final order the Tribunal shall state who shall bear the costs and in what proportion, if any.

(3) A bill of costs shall be drawn up by the Registrar in Form C and attached to the judgment.

26. *Supply of certified copies of judgment to the Chief Newspaper Advertisements Tax Officer and other parties.*—A certified copy of every judgment of the Tribunal shall be forwarded to the Chief Newspaper Advertisements Tax Officer as soon as practicable. A certified copy of it shall also be supplied free of cost and without application to the other party to the appeal.

CHAPTER V.

Miscellaneous.

27. *Copies of documents on payment of fees.*—(1) Any party to the appeal before the Tribunal may apply to the Registrar for a certified copy of any document (including the judgment) in the record of the appeal to which he is a party.

(2) The application shall be accompanied by a deposit of an amount to cover the cost of preparing copies according to the following scale of copying fees, namely :—

(*a*) For the first 200 words or less—	
English	12 annas.
Vernacular ..	6 annas.
(*b*) For every additional 100 words or fraction thereof—	
English	6 annas.
Vernacular	3 annas.

A uniform extra fee of Re. 1 shall be charged on an application for copies required urgently. The amount calculated according to the above scale shall be retained by the Registrar as copying fees and the surplus amount, if any, deposited by the party shall be refunded to him at the time of supplying the copy : provided that the party shall if the amount deposited by him is not sufficient to cover copying fees, pay the deficit before taking delivery of the copy.

(3) If the Registrar feels any doubt about the propriety of granting a copy of any such document, he shall place the application before the President, and act in accordance with the order of the President.

(4) Persons who are not parties to an appeal may be supplied with a copy of any such document only under the orders of the President and on payment of the copying fees.

28. *Forms of notices.*—Notices to be issued by the Tribunal shall, as far as may be in Forms D to H.

29. *Service of notices on Government.*—Notices required to be served on Government shall be served on Government agent and pending his appointment on the Chief Newspaper Advertisements Tax Officer.

30. *Service of notices in general.*—(1) The notices required to be issued to the parties under the Act or these regulations shall be served in person or by registered post with acknowledgement due. An acknowledgement containing the signature of the addressee or his pleader or his agent or an endorsement by the postal authorities to the effect that the notice was refused by the addressee shall, unless the contrary is proved, be deemed to be sufficient to hold that the notice was duly served.

(2) Where the Tribunal is satisfied that the addressee is evading service or that it is not possible to serve the notice in the ordinary way it may direct that a copy of the notice should be affixed on its notice board and another copy on the outer door or some other conspicuous part of the newspaper office.

FORM A.

(*See* Regulation 7.)

The Sales Tax Tribunal, Bombay (N. A. T. Branch).

Register of appeals.

Serial No.	Name of parties and their pleaders or agents, if any.	Date of the decision of the C. N. A. T. Officer or S. N. A. T. Officer.	Date of filing the appeal.	Date of appearance of the respondent, his pleader or his agent.	Date of decision by the Tribunal.	Final order passed by the Tribunal.	Whether decided unanimously or by majority.	Remarks.
1	2	3	4	5	6	7	8	9

FORM B.

(*See* Regulation 8.)

Before the Sales Tax Tribunal of the State of Bombay.

N. A. T. Appeal No. of 19 .

Appellant ;

versus

Respondent.

To

The Chief Newspaper Advertisements Tax Officer,
Bombay State.

Please take note that the above named appellant has filed an appeal before the Tribunal against your decision / the decision of Supervising Newspaper Advertisements Tax Officer in appeal No. of 19 of his file. A copy of the appeal is sent herewith. You are requested to send the record and proceeding of the above appeal with all practicable despatch.

Given under my hand and the seal of the Tribunal.

Date

Seal.

By order,

Registrar.

FORM C.

(*See* Regulation 25.)

BILL OF COSTS (TO BE ATTACHED TO THE JUDGMENT).

Sales Tax Tribunal Appeal No. *of 19* .

Appellant ;

versus

Respondent.

For the Appellant.	For the Respondent.

Prepared by (Date) By order,

Clerk.

Seal.

Registrar.

Examined by

Clerk.

FORM D.

(*See* Regulation 28.)

Before the Sales Tax Tribunal of the State of Bombay.

N. A. T. Appeal No. *of 19* .

Appellant ;

versus

Respondent.

To

The above named appellant.

You have filed an appeal against the order of the Chief Newspaper Advertisements Tax Officer / Supervising Newspaper Advertisements Tax Officer in appeal No. of 19 of his file. It does not comply with provisions of the Bombay Finance Act, 1932, and the rules and regulations in the following respects :—

2. You are hereby required to remedy the defects within 7 days of receipt of this notice by you. If you fail, the matter will be placed for orders before the Tribunal.

Given under my hand and the seal of the Tribunal.

Date

By order,

Seal.

Registrar.

FORM E.

(*See* Regulation 28.)

Before the Sales Tax Tribunal of the State of Bombay.

N. A. T. Appeal No. *of* *19* .

Appellant ;

versus

Respondent.

To

The above named appellant.

Take notice that the appeal filed by you against the decision of the Chief Newspaper Advertisements Tax Officer / Supervising Newspaper Advertisements Tax Officer Bombay, in appeal No. of 19 of his file has been placed before the Tribunal for orders as it is defective as already intimated to you. The Tribunal will hear the matter on . If you want to be heard, you should be present at the time of the hearing in person or through a duly appointed pleader or agent. If you fail to do so, the Tribunal will dismiss your appeal for default and pass suitable orders in your absence.

Given under my hand and the seal of the Tribunal.

By order,

Date

Registrar.

Seal.

FORM F.

(*See* Regulation 28.)

Before the Sales Tax Tribunal of the State of Bombay.

N. A. T. Appeal No. *of* *19* .

Appellant ;

versus

Respondent.

To

The above named appellant.

Take notice that the above appeal has been set down for hearing by the Tribunal on to decide whether the appeal should be admitted or not, and that you should attend on that day personally or through your duly appointed pleader or agent. On your failure to do so the Tribunal will hear and decide the appeal *ex parte*.

Given under my hand and the seal of the Tribunal.

By order,

Date

Registrar.

Seal.

FORM G.

(*See* Regulation 28.)

Before the Sales Tax Tribunal of the State of Bombay.

N. A. T. Appeal No. *of 19* .

Appellant ;

versus

Respondent.

To

The above named respondent.

Take notice that the above named appellant has filed an appeal before this Tribunal against the decision of in appeal No. of 19 of his file and that the Tribunal has fixed as the date for hearing. The Tribunal will hear it on that day or on a subsequent date to which it may adjourn it, after notifying the date on the notice board.

If you do not appear on the above date or dates, personally or through a duly appointed pleader or agent the Tribunal will hear and decide the appeal *ex parte*.

Given under my hand and the seal of the Tribunal.

Date

By order,

Registrar.

Seal.

FORM H.

(General.)

(*See* Regulation 28.)

Before the Sales Tax Tribunal of the State of Bombay.

N. A. T. Appeal No. *of 19* .

Appellant ;

versus

Respondent.

To

The

This is to give you notice that

Given under my hand and the seal of the Tribunal.

By order,

Date

Registrar.

Seal.

THE BOMBAY WEIGHTS AND MEASURES ACT, 1932 (BOM. XV OF 1932).

G. N., D. D., No. 52, dated 10th November 1949 (B. G., Pt. IV-B, p. 2104). **S. 11A (1)**

In exercise of the powers conferred by sub-section (*1*) of section 11A of the Bombay Weights and Measures Act, 1932 (Bom. XV of 1932), the Government of Bombay is pleased to declare that notwithstanding anything contained in the said Act, the standard weights and measures specified in column 1 of the Schedule hereto appended shall be used for the class of trades specified in column 2 in the areas specified in column 3 on and with effect from the dates specified in column 4 respectively of the said Schedule.

Schedule.

	Standard weights and measures.	Class of Trades.	Area.	Date.
1.	The pound avoirdupois equal to 7,000 grains and the sub-multiples 1/8, 1/4, 1/2, 1, 2, 4 and 8 ounces, the multiples 1, 2, 4, 7, 14, 28 lbs. [a quarter, 56 lbs., 112 lbs. (1 cwt.) and 2,240 lbs. (1 ton).]	The hardware, chemical and cotton trades.	I.—Surat, Broach, Panchmahals, Baroda, Kaira, Ahmebabad, Sabarkantha, Banaskantha, Mehsana, Amreli, Poona, Ahmednagar, Satara, Sholapur, Nasik, W. Khandesh, Sangli, Kolhapur, E. Khandesh.	1st December 1949.
2.	The Bombay Tola of 180 grains. The Bombay seer and the Bombay maund of 40 seer and the sub-multiples of 1/2, 1/4, 1/8, 1/16, 1/32, 1/64 and the multiples 2, 4, 8, 10, 20, 30 and 40 seers.	In trades other than hardware, chemical and cotton.		
3.	Liquid measures of capacity. The Bombay seer and the Bombay Maund of 40 seers and the sub-multiples of 1/2, 1/4, 1/8, 1/16, 1/32, 1/64 and the multiples 2, 4, 8, 10, 20, 30 and 40 seers.	Milk ...	II.—Belgaum, Bijapur, N. Kanara, Dharwar, Ratnagiri.	1st June 1950.
4.	Liquid measures of capacity. The Imperial gallon and the sub-multiples 1/2, 1/4 and 1/8 gallon (Pint) and multiples 2, 4, 5, 7, 15, 16, 20, 25, 40, 50, 100 and 200 of Imperial gallon. The Gill =1/4 Pint. Sub-multiples 1/8, 1/4, 1/2 and multiples 2, 4, 8 and pint and Gill.	Petroleum trade ...		
5.	Dry measures of capacity. The Bombay seers. The sub-multiples 1/2, 1/4, 1/8 seer (Adpao), 1/16 seer (Bombay Chhatak) and 1/32 seer and multiples 2 seer (Adholi), 4 seer (Payali). The Bombay maund of 16 Payalis. The Bombay Map of 2 maunds and the sub-multiples 1/8, 1/4, 1/2, 3/4 of Bombay maund.	In trades other than cereals (raw or fried), seeds, salt and flour.	III.—Bombay City, B. S. D., Thana, Kolaba.	1st December 1950.

S. 41 Bombay Weights and Measures Rules, 1934.

G. N., G. D., No. 9492, dated 5th June 1934 (B. G., Pt. I, p. 1323).

Amended by G. N., G. D., No. 212/33, dated 24th December 1934.
Amended by G. N., G. D., No. 212/33, dated 12th June 1935.
Amended by G. N., G. D., No. 212/33, dated 30th July 1935.
Amended by G. N., G. D., No. 212/33, dated 17th January 1936.
Amended by G. N., G. D., No. 212/33, dated 25th March 1936.
Amended by G. N., G. D., No. 1907/33, dated 19th July 1937.
Amended by G. N., G. D., No. 1907/33, dated 13th October 1937.
Amended by G. N., G. D., No. 1907/33, dated 10th January 1938.
Amended by G. N., G. D., No. 1907/33, dated 17th March 1938.
Amended by G. N., G. D., No. 1907/33, dated 29th March 1938.
Amended by G. N., G. D., No. 1907/33, dated 21st June 1938.
Amended by G. N., G. D., No. 1907/33, dated 8th August 1938.
Amended by G. N., G. D., No. 1907/33, dated 24th September 1938.
Amended by G. N., G. D., No. 1625/33, dated 2nd November 1938.
Amended by G. N., G. D., No. 1907/33, dated 17th March 1939.
Amended by G. N., G. D., No. 1907/33, dated 31st October 1939.
Amended by G. N., G. D., No. 1907/33, dated 7th November 1940.
Amended by G. N., G. D., No. 1907/33, dated 19th February 1942.
Amended by G. N., G. D., No. 1907/33, dated 27th June 1942.
Amended by G. N., E. & I. D., No. 7995, dated 5th November 1947.

In exercise of the powers conferred by section 41 of the Bombay Weights and Measures Act, 1932 (Bom. XV of 1932), the Government of Bombay are pleased to make the following rules with effect from 5th June 1934 for the purposes of carrying into effect the provisions of the said Act :—

RULES.

Short Title.

1. These rules may be cited as the Bombay Weights and Measures Rules, 1934.

Definitions.

2. In these rules unless there is anything repugnant in the subject or context—

(*a*) " The Act " means the Bombay Weights and Measures Act, 1932.

(*b*) " Director of Industries " means the officer appointed for the time being by Government to be the Director of Industries.

(*c*) " Government Inspector " means an Inspector appointed by Government under section 19.

(*d*) " Local Authority Inspector " means an Inspector appointed by a municipality or a district local board under section 19.

(*e*) " Secondary standard weights " mean weights which are secondary standards.

(*f*) " Secondary standard measures " means measures which are secondary standards.

(*g*) " Section " means a section of the Act.

(*h*) "Table" means a table appended to the rules.

(*i*) "Verification" with its grammatical variation includes "re-verification with its grammatical variations".

(*j*) "Working standard weights" means weights which are working standards.

(*k*) "Working standard measures" means measures which are working standards.

(*l*) Words and expressions defined in the Act shall be deemed to have the same meaning as in the Act.

The composition, weight, length, form and specifications of secondary standards and the manner in which they shall be made.

SECTION 41 (*2*) (*a*).

3. All secondary standards except the yard shall be cylindrical in shape.

4. All secondary standards, except the yard measure, shall be cast of Admiralty Bronze 88 per cent. copper, 10 per cent. tin and 2 per cent. zinc. Loop handles shall be provided for the ¼th maund, ½ maund and for the 14 lbs., 28 lbs. and 56 lbs. weights. Other weights shall have knob handles.

5. The yard shall be in the shape of a round tubular brass bar made with Micrometer Head for the purpose of accurate checking.

6. The larger secondary standard weights shall be fitted with screw adjustment plugs containing two holes to take a suitable spanner, and the smaller secondary standard weights shall have screw plugs to take an ordinary screw driver. For the purposes of this rule the Director of Industries shall determine which secondary standard weights shall be classified as larger or smaller.

The places at which, the custody and manner in which secondary standards shall be kept by municipalities and district local boards.

SECTION 41 (*2*) (*b*).

7. The places at which, the custody and manner in which secondary standards shall be kept by municipalities and district local boards, shall be subjected to the approval of the Director of Industries.

The procedure for the verification, re-verification, adjustment or renewal of primary and secondary standards and marking of secondary standards.

SECTION 41 (*2*) (*c*).

8. The primary standards shall be verified once at least in every five years against the iridio-platinum standards in the custody of the Mint Master. The Mint Master shall after each verification issue a certified list of errors which shall be used when verifying secondary standards.

9. All the secondary standards shall be returned for re-verification to the Director of Industries, Bombay, at least once in every five years. The secondary standards so received shall be verified by the Director of Industries and if found correct they shall be stamped and marked with the date of verification. If the secondary standards on verification are found to be incorrect they shall be adjusted and re-verified and if found correct shall be stamped accordingly.

The composition, weight, length, form and specifications and use of working standards, the authority by whom and the manner in which such standards shall be provided, the agency by whom such standards shall be made, the person by whom and the manner in which such standards shall be stamped, and the places at which and the custody and manner in which such standards shall be kept.

SECTION 41 (2) (*d*).

10. (1) All working standard weights shall be in a truncated cone form. The larger working standard weights shall be fitted with screw adjustment plugs containing two holes to take a suitable spanner and the smaller working standard weights to take a screw driver so that as the weight becomes light in use adjustment can be made. Such working standard weights shall be cast of Admiralty Bronze 88 per cent. copper, 10 per cent. tin and 2 per cent. zinc. Loop handles shall be provided for the ¼th maund, ½ maund and for the 14 lbs., 28 lbs. and 56 lbs. weights. Other weights shall have knob handles. For the purposes of this sub-rule the Director of Industries shall determine which working standard weights shall be classified as larger or smaller

(2) All the working standard measures shall be of stout sheet copper suitably reinforced and their shape shall be cylindrical for dry and conical for liquid working standard measures. The yard measure shall be in the shape of a solid round brass bar.

11. The Inspector shall verify the weights and measures of the public against the working standards.

12. Working standards shall be kept in the personal custody of the Government Inspector or the local authority Inspector, as the case may be. Working standards shall be kept and maintained in good clean working condition and shall be kept in safe custody so that their accuracy cannot be tampered with.

13 Working standards shall be made only by a person who is authorised by the Director of Industries to make such standards.

The procedure for the verification or re-verification and marking of working standards and the person by whom and the place where they shall be verified or re-verified.

SECTION 41 (2) (*e*).

14. All working standards shall be verified and marked at least once in every six months.

15. In the City of Bombay working standards shall be sent by the Municipal Corporation for the City of Bombay to the Director of Industries for verification. Elsewhere working standards maintained by any municipality or district local board shall be sent to the nearest Government Inspector for verification, re-verification and marking.

16. The Director of Industries or the Government Inspector, as the case may be, shall on receipt thereof without undue delay verify the working standards so received and if found correct mark them with the date of verification. If the working standards are not found correct within the limits allowed such working standards shall, if they require only minor adjustments, be adjusted and verified and if found correct marked accordingly.

17. The working standards in the custody of the Government Inspectors in Bombay or elsewhere shall be verified and marked against secondary standards by the Government Inspector and if found correct they shall be stamped with the date of verification at least once in six months.

The number of weighing instruments to be kept and necessary particulars regarding the same.

SECTION 41 (*2*) (*f*).

18. Every Municipality or district local board authorised to keep secondary and working standards shall keep a set of weighing instruments specified below :—

(*a*) One Inspector's Balance capable of weighing up to 1 cwt.
(*b*) One Inspector's Balance capable of weighing up to 300 tolas.
(*c*) One Inspector's Balance capable of weighing up to 5 tolas.
(*d*) One pair portable scales for weighing 1 cwt. downwards complete with case.

19. The make and type of weighing instruments specified in rule 18 shall be subject to the approval of the Director of Industries.

The au hority by whom certified scales shall be provided for the purposes of this Act and the rules and regulations and the manner in which they shall be verified.

SECTION 41 (*2*) (*g*).

20. All weighing instruments shall be verified at least once in six months.

21. In the City of Bombay the weighing instruments maintained by the Municipal Corporation for the City of Bombay shall be verified by the Director of Industries. Elsewhere the weighing instruments kept by the Municipality and district local boards shall be verified by the nearest Government Inspector.

22. The weighing instruments in the custody of the Government Inspectors shall be verified by the Director of Industries.

23. All weighing instruments when verified if found correct shall be stamped.

General.

23A. Every weight other than the weight of ¼ tola or its equivalent in other denominations and under, measure, weighing or measuring instrument manufactured after these rules come into force shall have the maker's name clearly and indelibly marked on it.

23B. Maker's name appearing on a weight or measure or weighing or measuring instrument manufactured after this rule shall have come into force shall be in letters not exceeding half the size of the letters indicating the denomination.

The composition, weight, length, form, specifications and manufacture of weights and measures in use in any area.

SECTION 41 (*2*) (*h*).

Weights.

24. (1) Weights shall be made entirely of some metal other than lead except where lead is inserted for purposes of adjustment. Weights made of soft metals

or soft alloys, e.g. tin or solder, shall not be stamped. Weights shall not be made of aluminium or other metals or alloys of low density.

Nothing in this sub-rule shall apply to weights specified in sub-rule (2).

(2) The Bullion Tola, Rati, Grain and Apothecaries weights shall be made only of solid brass, gun metal, bronze or German Silver. The Val weights, weights of one Rati and under, and 12 grains and under may be made of solid brass, gun metal, bronze, aluminium or platinum.

25. (1) All weights in the pound avoirdupois series shall be rectangular in shape with a bar for liftng purposes cast in the body, except the weights of denominations of 4 lbs. and under which shall be flat, square and without a lifting bar. Corners and edges of all weights shall be rounded off. All weights in a set shall be of similar form and proportional dimensions. The small weights of 4 lbs. and under shall nest with each other. No weights made of iron under 4 oz. shall be stamped.

Illustrations of lbs.—Avoirdupois weights.

4 lbs. and under.

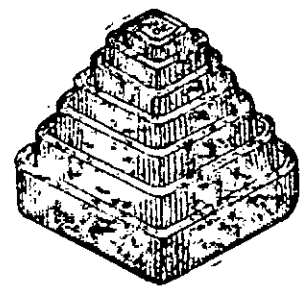

(2) All weights in the tola, seer and maund series shall be cylindrical in shape with a slight taper between the base and the top and shall have a bar for lifting purposes cast in the body, except the weights of denominations of two seers and under which shall be flat circular without a lifting bar. Edges of all weights shall be rounded off. All weights in a set shall be of similar form and proportional dimensions. The small weights of two seers and under shall nest with each other. No weight of iron under $\frac{1}{8}$ seer shall be stamped :

Illustrations of seer—Maund weights.

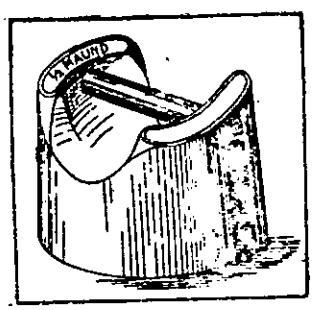

2 seers and under.

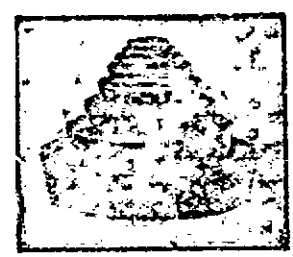

Provided that no weights in the maund series of the current design above 2 seers shall be accepted by Inspectors for verification and stamping, six months after the date of this notification. Current weights above 2 seers in the maund series in use in trade at the date of this notification shall be permitted for a period of ten years from the date of this notification.

(3) All weights of the Bullion Tola series, other than weights of the denominations of 100 tolas and under, shall be cylindrical in shape and shall have a knob or a handle for lifting purposes. The weights of the denominations of 100 tolas and under shall be flat and circular with or without a lifting knob. Val weights shall be flat and circular. The Bullion Tola weights shall be marked with the word " Bullion Tola " or its abbreviation.

Rati weights of the denominations of 1 Rati and over shall be flat and circular and shall be provided with a knob. The weights of the denominations under one Rati shall be flat and square.

Apothecaries weights and Grain weights equivalent to 1 ounce and upwards shall be cylindrical with knobs. Those below the equivalent of 1 ounce shall be flat with or without knob or of wire.

26. (1) Weights of 1 ounce and 2 tolas and over shall be provided with one adjusting hole only. Rati weights shall not be provided with adjusting holes.

(2) Adjusting holes shall be in the under-surface of the weight, and shall not extend to the upper surface. They shall be undercut and plugged with lead, which shall cover the bottom of the hole, and shall not project beyond the surface.

(3) No weight adjusted in any other manner shall be stamped.

27. (1) In weights made of iron and of flat shape the lead inserted for adjustment shall not be less than one-eighth of an inch thick, the approximate depth of the adjusting hole shall be equal to three-fifths of the centre thickness of the weight, and the approximate minimum distance of lead from the surface, when new, shall be one-fifth of the centre thickness of the weight.

(2) The adjusting hole of weights made of iron and of flat shape shall be circular and shall approximately be of the following diameters, namely :—

(*i*) For 4 lbs., 2 lbs., 2 seers and 1 seer weights—Of 1 inch diameter ;

(*ii*) For 1 lb., weights—Of $\frac{3}{4}$ inch diameter.

(*iii*) For 8 ozs., 4 ozs., $\frac{1}{4}$ seer and $\frac{1}{8}$ seer weights—Of $\frac{1}{2}$ inch diameter.

(3) The adjusting holes of weights made of iron other than of flat shape shall be rectangular or circular, and shall not exceed the area of a rectangle of the following dimensions :—

Denomination of seer weights.	Denomination of pound weights.	Length.	Width.	Approximate diameter of Circle equivalent to area of Rectangle.	Approximate minimum distance of lead from surface when new.
		Inch.	Inch.	Inch.	Inch.
1 maund	100 lbs.	3	$1\frac{1}{2}$	2·2/5	$1\frac{1}{2}$
20 seers	56 ,,	$2\frac{1}{2}$	$1\frac{1}{4}$	2	$1\frac{1}{4}$
	50 ,,				
	28 ,,	2	1	1·3/5	1
10 ,, ...	20 ,,	$1\frac{1}{2}$	$\frac{3}{4}$	1·1/5	
	14 ,,	$1\frac{1}{4}$	$\frac{5}{8}$	1	$\frac{5}{8}$
5 ,, ...	10 ,,	1	$\frac{1}{2}$	4/5	$\frac{1}{2}$
	7 ,,				
3 ,, ...	5 ,,	$\frac{3}{4}$	$\frac{1}{2}$	11/16	$\frac{1}{2}$

Brass, etc., Weights.

(4) The adjusting holes of weights made of metals other than iron shall be circular and approximately of the following dimensions :—

Denomination of seer weights.	Denomination of pound weights.	Diameter.	Depth.	Approximate minimum distance of lead from surface when new.
		Inch.	Inch.	Inch.
Other than flat shape.				
1 maund	100 lbs.			
½ „	56 „	1½	2	1
	50 „			
10 seers	20 „			
	20 „	1	1¼	¾
	14 „			
5 „	10 „			
	7 „	¾	1	½
3 „	5 „			
Flat shape.				
3 and 2 seers	4 lbs.			
1 seer	2 „	¾	3/5ths centre thickness of weight.	1/5th centre thickness of weight.
½ „	1 lb.			
¼ „	8 ozs.	½		
⅛ „	4 „			
	2 „	¼		
	1 oz.			

(5) The adjusting holes of the Bullion Tola weights shall be circular and approximately of the following dimensions :—

Denomination of Tola weights.	Diameter.	Approximate minimum distance of lead from surface when new.
Other than flat shape.		
2,000, 1,000	1″	1″
500, 300, 200	¾″	¾″
Flat shape.		
100, 50	¾″	¼″
30, 20, 10	½″	3/16″
5, 4, 3, 2	⅜″	⅛″

*[Illustration attached.] (*Not printed.*)

Dry Measures of Capacity.

28. (1) Dry measures of capacity shall be made of sheet-iron or steel, with or without nickel-plating, tin-plate, brass, bronze, copper, nickel, aluminium, well-seasoned wood, or other material approved by the Director of Industries. Measures may be protected by galvanisation or by other process approved by the Director of Industries.

(2) Dry measures of capacity turned from the solid wood or made of sappy wood shall not be stamped.

(3) Dry measures of greater capacity than the Bombay Payali shall be provided with handles.

(4) The upper surface of all dry measures shall be in one plane.

(5) The bottom of all dry measures made of metal shall be flat, with a base not less than half an inch in depth going all round the edge. The bottom shall be reinforced by two diametrical strips at right angles to each other not less than half an inch in width each.

(6) The body of all dry measures made of metal shall be strengthened by a metallic band round the rim of the measure. In addition to this the Bombay Payali and other dry measures of greater capacity shall have one more band near the middle of the body.

(7) The thickness of the metal used shall be such that the body cannot be easily indented or forced in.

29. (1) The Bombay maund and other dry measures of smaller capacity made of metal shall be of circular cylindrical form, and the internal diameter of such measures shall not differ by more than five per cent. from their depth or double their depth.

(2) The dry measures of capacity made of wood shall be rectangular in shape the length being equal to the breadth which shall not differ by more than 5 per cent. from the depth or double the depth. The dry measures of capacity made of wood of 2 seers and under may also be of circular cylindrical form and the internal diameter of such measures shall not differ by more than 5 per cent. from their depth. The measures of capacity of ½ maund and over shall have one wooden strip lengthwise on top for strength.

[Illustration attached (*not printed*).]

30. The Bombay Payali and other dry measures of greater capacity and made of wood shall be bound or strengthened with metal or wooden straps or hoops, except when made of wicker or similar open material.

31. (1) The denomination shall be marked as near the upper edge as possible on every dry measure of capacity in the same manner as on liquid measure. On a measure made of wood the denomination shall be branded.

(2) Dry measures of capacity made of wicker or similar open material shall have the denomination marked on a suitable brass tablet or plate, fastened to the measure by means of a copper wire or branded on a tablet of wood securely worked into the side of the measure.

31-A. All dry measures of capacity shall be such as to give correct quantities according to denomination only when they are filled up to the level of the brim.

Liquid Measures of Capacity.

32. (1) Liquid measures shall be made of glass, earthenware, tin, tin alloys, pewter, brass, bronze, copper, tin-plate, white metal, aluminium, nickel, nickelled or nickel-plated steel or sheet-iron, enamelled metal, or other material approved by the Director of Industries.

(2) Liquid measures made of brass, bronze or copper shall be well tinned all over the inside.

(3) The coating of nickel on nickelled measures shall be uniform and show no signs of peeling.

(4) (*a*) Liquid measures of Imperial Gallon series and liquid measures of greater capacity than two seers shall be of a conical shape and shall be provided with handles. Liquid measures of Gallon series used in liquor trade and liquid measures of two seers and below shall be either cylindrical or conical in shape and shall be provided with handles.

Liquor dram and peg measures shall be cylindrical in shape with or without handles except automatic peg measures which shall be of a pattern approved by the Director of Industries.

For liquid measures of conical shape of capacity below ¼ seer and one pint, the height shall be equivalent to the diameter of the base and the diameter of the top shall be one-third of the height subject to a variation of five per centum.

In the case of liquid measures of a conical shape having a capacity of ¼ seer and up to 5 seers and one pint to four gallons, the height shall be equivalent to the diameter of the base and the diameter of the top shall be one-fourth of the height subject to a variation of five per centum. The sides of the conical measure shall make an angle of about 78° with the base.

Liquid measures of a greater capacity than 5 seers or four gallons shall not be stamped unless they are of a pattern approved by the Director of Industries.

(*b*) Metal measures of the capacity of two seers and below and liquor dram and peg measures of cylindrical shape shall have vertical sides and shall have no retaining edge or rim. Their height shall not differ by more than ten per centum from one and a half times their diameter.

Liquid measures of gallon series of cylindrical shape used in liquor trade shall have no retaining edge or rim. Their height shall not differ by more than ten per centum from their diameter or one and a half times their diameter.

Such measures shall be well tinned over, inside as well as outside if they are intended to be used for any liquid food.

Note.—Electroplating or gilding the said measures shall be regarded as a substitute for tinning.

Measures used for dipping shall have a dipping handle which shall not be longer than twice the depth of the measure. Measures used for pouring shall have a suitable handle.

(*c*) Apothecaries measures shall be of a conical or cylindrical shape with retaining edge or rim with a spout.

(5) The thickness of the metal used in all liquid measures shall be such that the body cannot be easily indented or forced in.

(6) The bottom of all liquid measures except those used for dipping shall be provided with a base consisting of a circular metal band not less than ½″ in width going all round the edge and shall also be reinforced with such diametrical strips not less than half an inch in width as will ordinarily prevent its being indented or raised.

(7) If a liquid measure possesses a top rim, lip or retaining edge, a small hole shall be provided at the bottom of the lip, rim or edge. If it is without a top rim the upper surface shall be level.

(8) A liquid measure with a tap must be capable of completely emptying itself without being tilted.

(9) No liquid measure shall possess any mark on it, not being a graduation mark or line which may be mistaken for a graduation mark or line.

Illustrations of large liquid conical measures and of small liquid measures intended to be used for pouring as well as dipping purposes are given below :—

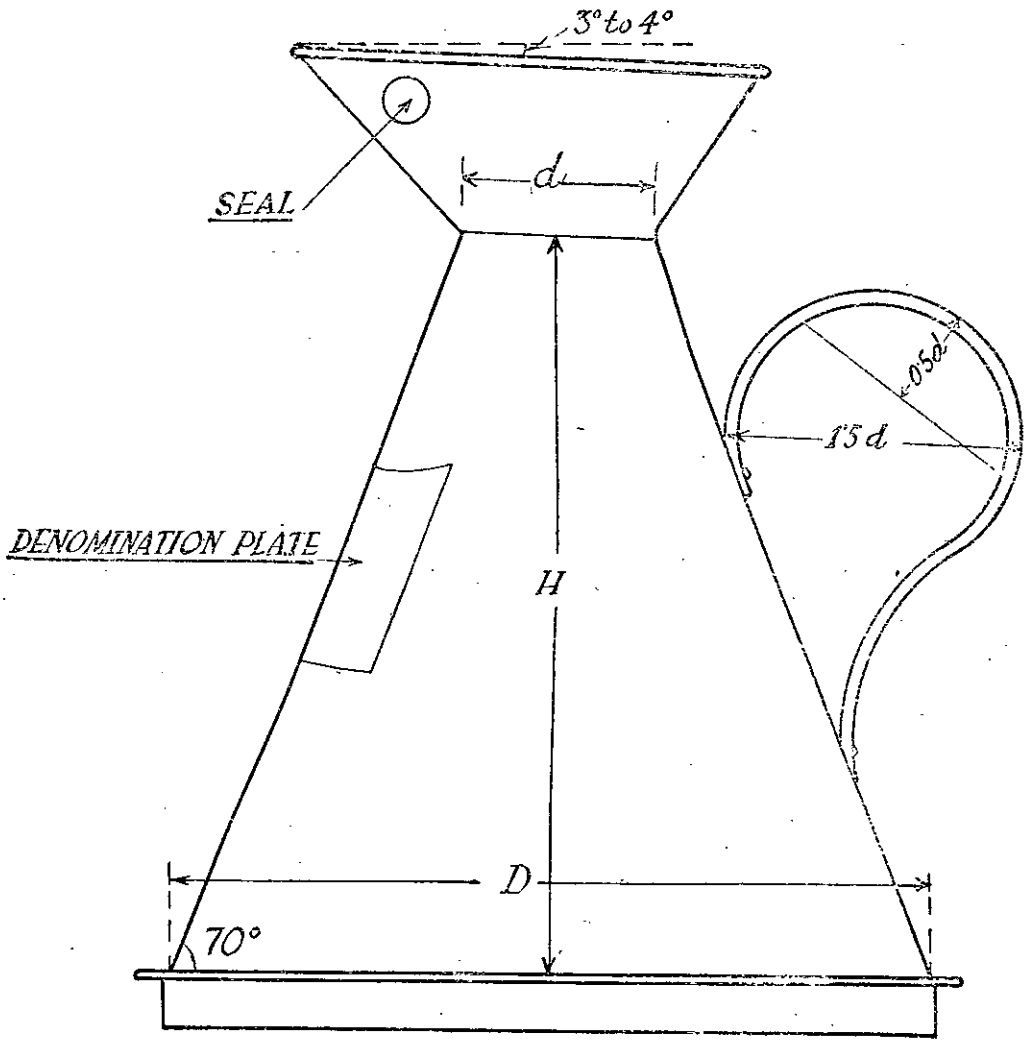

Note :—(1) $D = H$ (2) $d = D/4$

ILLUSTRATION

OF

LIQUID CONICAL MEASURES

of capacity 1/4 Seer & over and one Pint and over

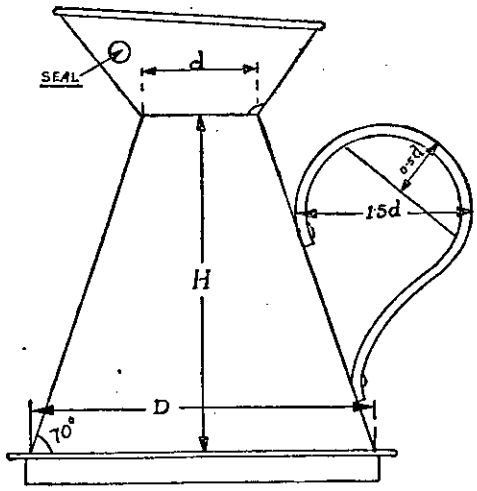

ELEVATION

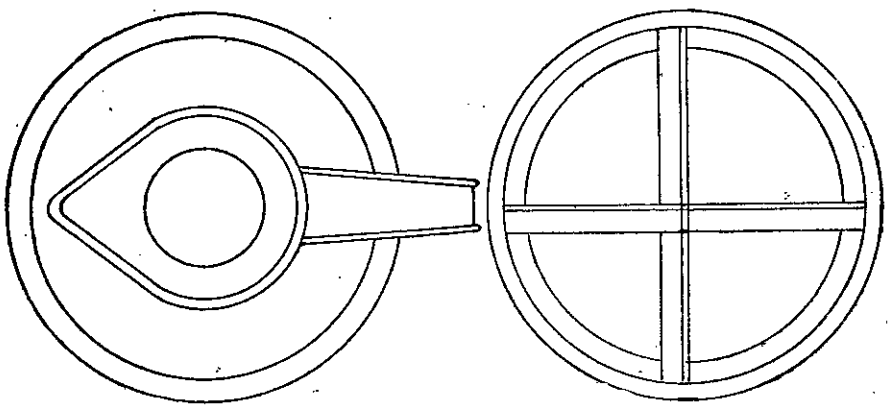

PLAN BOTTOM VIEW

(1) $D=H$ (2) $d= H/3$.

ILLUSTRATION

OF

LIQUID CONICAL MEASURES

below $\frac{1}{4}$ seer and one pint

Cylindrical Liquid Measures

FOR

POURING AND DIPPING

PURPOSES

2 SEERS AND UNDER

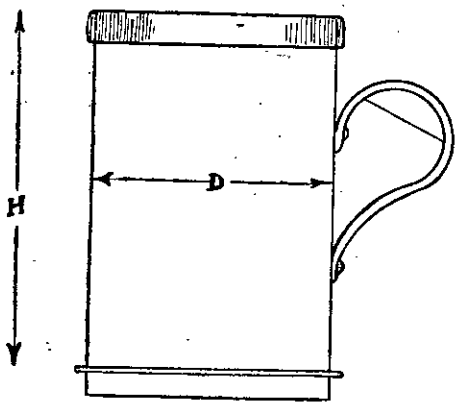

—ELEVATION—

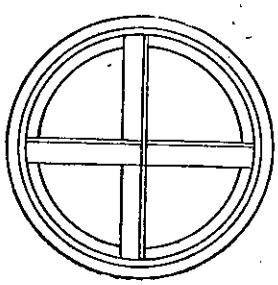

——BOTTOM VIEW——

(1) H TO BE WITHIN 10 % OF 1½ D.

ILLUSTRATION

OF

SMALL LIQUID MEASURES

FOR

POURING PURPOSES

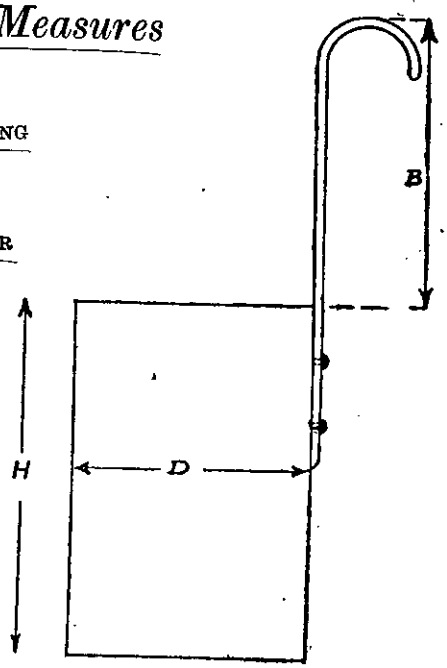

—ELEVATION—

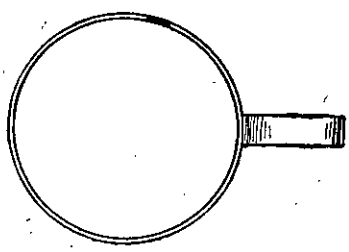

——PLAN——

(1) H TO BE WITHIN 10 % OF 1½ D.

(2) B NOT GREATER THAN 2 H.

ILLUSTRATION

OF

SMALL LIQUID MEASURES

FOR

DIPPING PURPOSES

33. A liquid measure, if its capacity is clearly defined, may have a top rim, lip, or retaining edge, to prevent spilling, provided that the capacity thus added does not exceed 10 per cent. of the marked capacity of the measure. No liquid measure shall have a false bottom.

A liquid measure which is not completely emptied, when tilted to an angle of 120 degrees from the vertical, shall not be stamped.

34. Every liquid measure shall have its denomination clearly, permanently, and legibly marked upon the outside of the body thereof, and not upon the handle, bottom, rim or edges; but on a glass measure in which the capacity is defined by a line, the denomination of the measure shall be plainly marked at the line. On an enamelled metal measure, the denomination shall be marked in a distinctly different colour from that of the body of the measure. In the case of a measure made of sheet metal, the denomination shall be marked on a slip of tin or on a shield (e.g., of sheet brass) securely soldered on the measure, with a small piece of tin or securely fixed thereto for receiving the stamp.

35. A glass liquid measure, in which the sub-divisions are less than one-twelfth inch apart, shall not be stamped.

The total number of the graduations shall be clearly ground upon every liquid measure.

A glass liquid measure shall have perfectly smooth transparent cylindrical sides and shall have clearly ground on the outer surface the necessary graduation marks each at two places diametrically opposite, so that in reading the measure the corresponding graduation marks at such places shall coincide when observed from either side.

A liquid measure also ground with equivalents in weight may be stamped, provided that the words "of water" are ground on the measure in addition to the denomination.

Area and Volume.

35A. (1) Cubic measures of capacity shall be made of well seasoned wood. Measures made of sappy wood shall not be stamped.

(2) Such measures shall be bound or strengthened with metal or wooden straps. The measures shall have one wooden strap lengthwise on top for strength.

(3) The denomination of every cubic measure shall be branded as near the top edge as possible.

(4) Cubic measures of capacity shall be rectangular in shape, the length shall not differ by more than five per centum from their breadth or double their breadth. In all such measures the height shall not be less than one foot.

Measures of Length.

36. Every measure of length shall be made of steel, brass, ivory, hard wood, woven tape, or other material approved by the Director of Industries. Such measure shall be denominated and graduated clearly and indelibly. The measures of 2 feet or more in length and made of wood shall have both ends tipped with metal, and the tips shall be rivetted. In measures used for measuring bales, boxes, timber, etc. any sliding or calliper arms shall have no more play than is necessary for easy movement.

A sub-divided measure of length shall have its numbered divisions, and also their sub-divisions, of longer lines than the minor graduations.

End measures of length which are not sub-divided shall not be stamped unless engraved or marked by the manufacturer " not sub-divided ".

Every measure of length, except that of woven tape or metal tape or chains made of metal shall be so made that it cannot be easily bent.

Weighing Instruments.

General.

37. Every weighing instrument manufactured after these rules shall have come into force shall have a maker's name, and its capacity prominently and indelibly marked on it. The capacity shall be indicated in the following manner :—

" To weigh lb."

" To weigh seers."

38. (1) All knife edges and bearings of a weighing instrument shall be of hard steel or agate or other material approved by the Director of Industries ; they shall be so fitted as to allow the beam or steel yard to move easily, and the knife edges shall practically bear upon the whole length of their working parts.

(2) All graduations in the case of weighing instruments shall consist of sharply defined lines, so that the position of all sliding poises or indicators shall be clearly readable.

Beam scales.

39. (1) The term " beam scale " means any weighing instrument, with two equal arms, the pans of which are below the beam.

(2) A beam scale shall be made of mild steel, wrought iron, brass, bronze or any other material approved by the Director of Industries. The pans shall be made of mild steel, cast-iron, brass, bronze, hard w od, leather or any other material approved by the Director of Industries. The pans shall be suspe ded by means of metal chains or metal stirrup supports or supports made of any other material approved by the Director of Industries.

(3) A beam scale shall have a knife edge, a bearing and an indicator in the centre, and a knife edge at each extreme end of the beam. The bearings in the case of Class A and Class B beam scales of a capacity of 1 oz. and above and the bearings or hooks in the case of Class C and Class D beam scales from which pans are suspended shall rest on the knife edges at the extreme ends of the beam, and shall bear practically on the whole length of the knife edges.

40. (1) Every beam scale shall belong to one of the following four classes :—

Class A.—Chemical and Assay balances and other beam scales provided with means for relieving all bearings and knife edges. Class A instruments shall satisfy the requirements of Table VII and need not be marked with a class mark.

Class B.—Beam scales, other than Class A instruments, which satisfy the requirements of Table VIII.

Class C.—Beam scales other than those specified in Class A or Class B which satisfy the requirements of Table IX.

Class D.—Beam scales other than those specified in Class A or Class B or Class C, which satisfy the requirements of Table IX-A.

(2) All beam scales other than those specified in Class A shall be legibly and indelibly marked Class B, Class C, or Class D.

41. (1) Any attachment for adjusting the balance of a beam scale shall be permanently fastened and where a balance ball or box is used for occasional adjustment, it shall be so fixed that it cannot readily be tampered with. Beam scales with wooden scale boards shall be provided with a balance ball or box.

(2) The balance ball or box shall not be so large as to contain more loose material than an amount exceeding 1 per cent. in weight of the weighing capacity of beam scales under 100 lbs. or than an amount exceeding 2 lbs. for beam scales of weighing capacity over 100 lbs.

(3) Beam scales of a capacity less than 2 cwt. with wooden scale boards shall have metal sheets covering the scale boards.

Counter Machines.

42. For the purposes of these rules the term "counter machine" means any equal-armed weighing instrument of a capacity not exceeding 1 cwt. or 55 seers, the pans of which are above the beam, and includes, together with the ordinary type, such instruments as are specially designed for counter use, and which do not exceed the abovementioned capacity.

43. When the beam or body has two sides, they shall be connected together by not less than two cross bars ; and the supports for the pans shall be of suitable rigid structure, such as crosses strengthened by straps.

Centre forks shall be fixed so that they cannot twist or get out of place.

The bearing surfaces and points of contact of all stays, hooks, and loops, shall be of hard steel or agate or other material approved by the Director of Industries.

Where a counter machine is adjusted by means of a balancing box, it shall be permanently fixed beneath the weight pan, and shall be large enough to contain loose material to an amount not exceeding 1 per cent. of the capacity of the machine.

No other adjusting contrivance shall be used.

Spring Balances.

44. A spring balance, of a capacity of 30 lbs. or 15 seers or under, with the goods pan below the spring, shall be permanently suspended from a stand, support, or bracket, and if not so suspended shall not be stamped.

45. The extremity of the index finger shall not exceed 1/32 inch in width, and shall not be more than 1/10 inch from the scale or dial.

46. The scale shall be graduated into approximately equal parts, and the minimum width apart of the graduations shall not be less than 1/16 of an inch for a capacity of 30 lbs. or 15 seers and under, and not less than $\frac{1}{8}$ of an inch for a capacity of 40 lbs. or 20 seers and over.

47. The weights corresponding to the interval between consecutive graduation marks shall conform to the following table :—

Capacity.	Weight corresponding to interval between consecutive graduations must not exceed.
1 lb. or ½ seer	... 2 drams.
2 lbs. to 7 lbs. or 1 seer to 3½ seers ...	... 4 drams.
10 lbs. to 15 lbs. or 5 seers to 7½ seers	... 8 drams.
20 lbs. to 30 lbs. or 10 seers to 15 seers	... 1 oz.
40 lbs. to 60 lbs. or 20 seers to 30 seers	... 2 oz.
100 lbs. and over or 50 seers and over ...	... 1/200 of capacity.

When the graduation commences at a fixed load, the position of the index, when there is no load, shall be clearly indicated by a zero mark.

48. Capacities between 1 lb. and 100 lbs. and between ½ seer and 50 seers, other than those included in the table in rule 47, shall not be permitted.

49. When a spring balance is provided with an adjustable indicator, the range of adjustment shall not exceed one per cent. of the capacity of the instrument, except in the case of instruments used for mining purposes, when it shall not exceed two per cent.

Steel Yards.

50. All steel yards shall be made of wrought iron, steel, or other material approved by the Director of Industries. The shank shall be perfectly straight.

Each set of notches, or graduations, on the shank shall be cut in one plane, and be at right angles to the shank.

All steel yards shall be provided with a stop or other suitable arrangement, to prevent excessive oscillation of the shank.

Sliding poises and suspending hooks shall be securely attached to the instrument.

All end fittings, such as the nut attached to prevent the poise carrier riding off the steel yard arm, shall be securely fixed to the shank.

The sliding poise shall be freely moveable without risk of injury to the notches from constant use, and there shall be a stop to prevent it from travelling behind the zero mark or lowest graduation.

Dead-weight Machines.

51. For the purposes of these rules the term "dead-weight machine" means any weighing instrument similar in principle of construction to a counter machine, but constructed to weigh loads of a capacity of 1 cwt. or 55 seers or over, and includes—

(*a*) the Low pattern or cotton machine with the weighing platform near the ground and the connecting stays or hooks above the beam ;

(*b*) the High pattern or single machine with the weighing platform at a convenient height, and the connecting stays or hooks below the beam. This form includes equal-armed machines for weighing coal or vegetables ; and

(*c*) the Double machine, a combination of (*a*) and (*b*).

52. The bearing surfaces and points of contact of all stays, hooks and loops, shall be of hard steel and the centres shall have rectangular shoulders and fit into rectangular holes, being firmly secured.

The bearing surfaces of the adjustable slides shall be of hard steel, and the stems holding them in position shall be secured by lock nuts or otherwise.

The goods platform shall not exceed in length the length of the beam, and in width double the width of the beam. Folding wings shall not increase such dimensions more than one-third in either direction.

Platforms shall be of metal or hard wood.

The minimum fall in dead-weight machines shall be $\frac{5}{8}$ inch both ways for vibrating machines, and $\frac{7}{8}$ inch one way for accelerating machines.

Platform Machines and Weighbridges.

53. The steel yard of a platform machine or a weighbridge shall not involve any readily removeable parts, except the support for the counter poises. There shall be a stop or stops to prevent the sliding poise or poises from travelling behind the zero mark.

The steel yard or registering mechanism may be confined in a locked box or case provided that the indications or graduations are visible.

The minimum travel of the steel yard in platform machines shall be $\frac{3}{8}$ inch both ways for vibrating machines, and $\frac{5}{8}$ inch one way for accelerating machines. The minimum travel of the steel yard in weighbridges shall be $\frac{1}{2}$ inch both ways for vibrating machines, and $\frac{3}{4}$ inch one way for accelerating machines.

54. If a moveable hutch, barrow, frame, or bucket is used instead of the ordinary platform, it shall form an essential part of the machine, without which it cannot be balanced.

All counterpoises for use in connection with moveable hutches, etc., shall be tested.

All loose counterpoises shall be identified with the machine by an indelible number or other sufficient mark of identification. They shall be marked with their equivalent weights in the following manner, e.g. :—

=1 cwt.

=—seers.

55. The balancing arrangement for daily wear and tear shall have a range not exceeding $\frac{1}{2}$ per cent. of the capacity of the machine, and not less than $\frac{1}{8}$ per cent. each way. In a new machine, it shall be securely attached and actuated by a detachable key.

56. The following provisions shall apply to platform machines and weigh-bridges with dials :—

(*a*) Racks and pinion shall be of hard metal.

(*b*) The extremity of the index shall in no position be at a greater distance from the graduated surface of the dial than $\frac{3}{16}$ inch ; and shall be made to meet but not to obscure the graduation marks.

(*c*) The registration mechanism and cylinders or tanks containing liquid (if any), shall be protected from dust, and from excessive variations of temperature.

(*d*) In a self-indicating pit-bank weighing machine, the pendulous lever, suspension rod, and water box shall be suitably enclosed.

Crane Machines.

57. Crane weighing machines may be constructed upon the lever, spring, or hydraulic principles.

All working parts shall be suitably protected from damp and dust.

In a lever machine, the steel yard may be made of special metal to resist atmospheric influences, provided it is sufficiently rigid and accurate. The rack and pinion in a dial machine shall be of suitably hard metal.

58. The range of balancing or adjusting arrangements shall not exceed two per cent. of the capacity of the machine.

The inspection, verification, re-verification, adjustment and stamping of weights and measures and weighing or measuring instruments in use in any area, including the prohibition of stamping in cases where the nature, denomination, material or mode of construction of the weight or measure or weighing or measuring instrument appears likely to facilitate the commission of fraud and the period within which such weights and measures and weighing or measuring instruments shall be verified or re-verified.

SECTION 41 (2) (*i*).

General.

59. The Inspector authorised under section 22 shall visit the premises of every trader in the area in his charge for the purpose of inspecting all weights, measures, and weighing and measuring instruments in use for trade once at least in two years. And he shall from time to time make such special surprise visits as are necessary for the proper disharge of his duties.

60. An Inspector shall make monthly reports to the authority appointing him showing the work of inspection and verification done by him in a form approved by the Director of Industries. Copies of such reports shall be sent to the Director of Industries by the local authority concerned quarterly, that is, on the 1st of January, 1st of April, 1st of July and 1st of October in each year.

61. All weights, measures, and weighing and measuring instruments shall be tested in a clean condition, and, if necessary, the Inspector shall require the owner or user to clean them.

62. Where a weight, measure, or weighing or meauring instrument is brought by a trader to an Inspector for re-verification the Inspector shall deal with it in the same manner as upon inspection, but it shall not be necessary for him to test a glass or earthenware measure, unless the original stamp has been defaced.

The margin of error permissible on re-verification shall not exceed the margin of error permissible on verification.

63. (1) Before stamping any weight, measure or weighing or measuring instrument, the Inspector shall satisfy himself that such weight, measure, or weighing or measuring instrument complies with the requirements of the Act and the rules.

(2) Weights, measures and weighing and measuring instruments already in existence at the commencement of the rules, which do not conform exactly to the requirements of the rules but which are one or the other of the weights and measures mentioned in the first schedule of the Act and are within the percentages of error permitted by these rules, shall be verified and stamped during the periods shown in Table XVIII hereinafter called "periods of allowance."

(3) The periods of allowance shall begin to run from the date of the commencement of these rules and after the expiry of the said period no weight, measure or weighing or measuring instrument shall be verified or stamped unless it complies exactly with the Act and these rules.

(4) Notwithstanding anything contained in sub-rule (1), any weight, measure or weighing or measuring instrument which is once verified or stamped in accordance with the rules then in force may at any time within a period of ten years after the date of such first verification or stamping, as the case may be, be reverified or stamped under these rules if such weight, measure or weighing or measuring instrument complies with the provisions of the rules which were in force at the time of its first verification or stamping, as the case may be.

64. A weight, measure, or weighing, or measuring instrument presented for verification shall be complete in itself, and shall not bear a manufacturer's or maker's mark which might be mistaken for the inspector's stamp.

65. No weight, measure, or weighing or measuring instrument shall be stamped which is not, in the opinion of the Inspector, sufficiently strong to withstand the wear and tear of ordinary use in trade.

66. The denomination or capacity of a weight, measure, or weighing or measuring instrument, if not marked in full shall be indicated only by one of the abbreviations set out in Table XIX.

67. No instrument, weighing or measuring, manufactured after these rules shall have come into force other than Class A beam-scales, shall be stamped unless provided by the manufacturer with a plug or stud of soft metal on which to place the Inspector's stamp, such plug or stud being made irremoveable by under-cutting or in some other suitable manner.

68. (1) The Inspector shall stamp weights, measures and instruments with a stamp of uniform design issued by the Director of Industries, with the addition of the number or mark distinguishing the district.

(2) All weights measures (other than glass, earthenware, and enamelled metal measures), and weighing or measuring instruments shall, except where the small size renders it impracticable, have a date marked (indicating the date of stamping) on them by the Inspector.

68A. No weight, counterpoise, measure, or weighing or measuring instrument for which no specific provision is made in these rules shall be stamped unless it is of a pattern approved by the Director of Industries.

Weights.

69. All weights shall be examined to ascertain that they comply with the Act and these rules in every respect.

70. (1) A weight shall not be stamped unless in the opinion of the Inspector such weight is free from flaws, and smooth on all its surfaces.

(2) No weight made of iron manufactured after the date when the rules shall have come into force shall be stamped unless such weights are blacked or black-leaded oxidised or protected by galvanization or other process approved by the Director of Industries.

71. Weights shall be stamped on the lead in the adjusting hole in the under-surface of the weight :

Provided that weights made of brass and without an adjusting hole shall be stamped on the under-surface.

71-A. No weights used in either
(a) Gold and Silver trades, or
(b) Pearl and Precious Stone trades,
shall be stamped unless they are either Bullion Tola, Val or Rati weights.

Dry Measures of Capacity.

72. All dry measures of capacity must be examined to ascertain that they comply with the Act and these rules in every respect.

73. No dry measure of capacity shall be stamped which is constructed to contain more than one denomination of measure, unless such measure is of a pattern approved by the Director of Industries.

74. (1) All dry measures of capacity not being a measure made of wicker or other open material, shall be tested either with water or in the following manner with rape seed :—

(a) the working standard shall be filled with seed passed through a hopper a distance of six inches being left between the bottom of the hopper and the top of the working standard ;

(b) all the seed contained in the working standard shall then be replaced in the hopper and thence run from the hopper into the measure under verification, which shall be placed so that the same distance of six inches intervenes between the bottom of the hopper and the top of the measure.

(2) Dry measures of capacity made of wicker or other open material shall be tested by means of cereals of the smallest size practicable.

75. Dry measures of capacity made of metal shall be stamped near the brim in a vertical line with the denomination. Where necessary, such measures shall be provided by the maker with a soft plug to receive the stamp.

76. Dry measures of capacity made of wood shall be branded outside in a vertical line with the denomination, and, in the case of new measures, also in the inside angle at the bottom of the measure.

Dry measures of capacity made of wicker or other open materials shall be stamped on the tablet plate or fastening in such manner that such tablet, plate or fastening cannot be removed without defacing the stamp.

Liquid Measures.

77. All liquid measures shall be examined to ascertain that they comply with the Act and these rules in every respect.

78. A liquid measure marked with equivalents in weight may also be stamped, provided that the words " of water " are marked on the measure in addition to the denomination.

79. Every liquid measure gallon to one pint, both inclusive, shall be tested by filling the working standard with water and emptying the contents of the working standard into such measure submitted for verification.

Where the capacity is indicated by a line, the measure shall be tested to the bottom of the line.

A lip or rimmed liquid measure shall be tested to the bottom of the lip or rim.

Area and Volume.

79-A. (1) All measures of volume shall be examined with the object of discovering flaws or want of straightness and proper right angles at the corners.

(2) Every measure of volume shall be verified by comparing length of each side against the working standard of length at or near the normal temperature.

(3) The allowance for errors in the case of lengths of the sides of measures of volume shall be the same as prescribed for linear measures.

(4) All measures of volume shall be stamped near the top edge on brass plate securely fastened to them.

Measures of Length.

80. All measures of length shall be examined with the object of discovering flaws or want of straightness or strength.

81. Every measure of length shall be verified by comparison with a working standard at or near the normal temperature.

82. A linked measure, or a riband or tape measure, shall be tested when subjected to a tension or pull as follows :—

Ordinary riband or tape measure	2 lbs.
Ordinary riband or tape measure (metal)	10 lbs.
Linked measures	15 lbs.

The measure under test shall be supported throughout its whole length on a plane and even base.

83. Tape measures which are intended to be used in cases may be accepted for verification and stamping if submitted without the case.

84. All measures of length shall be stamped near the beginning of the scale on each graduated side.

In the case of linked measures the stamp may be placed on a metal label or disc permanently attached to the measure, or on the brass handle.

WEIGHING INSTRUMENTS.

General.

85. (1) A weighing instrument of the vibrating type shall be tested for sensitiveness by loading the instrument with the maximum testing load, with the beam or steel yard in a horizontal position, and ascertaining that it turns with the addition of the amount shown in the tables for sensitiveness. No test for sensitiveness at a lower load shall be made.

(2) For beam-scales, the addition of the said amount on either side shall cause an appreciable movement of the eam.

(3) For other vibrating weighing instruments, the addition of the said amount shall cause the beam or steel yard to rise or fall to the limit of its range of movement.

86. (1) Weighing instruments of the vibrating type shall be tested for error, by ascertaining the weight in excess or deficiency (if any), required to bring the beam or steel yard of the machine to a horizontal position when fully loaded.

(2) Weighing instruments of the accelerating type shall be tested for error by ascertaining the weight required, when the machine is fully loaded, just to keep the beam or steel yard in a horizontal position on its stop or career and no more ; and shall be further tested by ascertaining the weight required to bring back the beam or steel yard from its position of greatest displacement to the horizontal position, the machine being fully loaded and truly be balanced.

87. For capacities not tabulated, the allowances for error, and the required sensitiveness shall be proportional.

88.. Movable weighing instruments provided with a beam shall be testd on a level plane, and instruments which are suspended in use shall be suspended when tested.

89. A weighing instrument with removable hooks (other than the hooks or bearings of " swan-neck " beams, and the hooks at the end of steel yards of compound lever machines) shall not be stamped unless it is of a pattern approved by the Director of Industries.

90. No weighing instrument having a counterpoise or travelling poise shall be stamped, unless such counterpoise or travelling poise is provided by the manufacturer with a hole or other suitable means for future adjustment, such adjusting hole being under-cut ; and if loose material is used in a travelling poise, it shall be securely enclosed.

The Inspector shall ascertain that a weighing instrument is properly balanced when not loaded, that the beam has sufficient room for oscillation and that it returns to the position of equilibrium or that the indicator returns to the zero mark or minimum graduation, when the load is removed.

91. No weighing instrument with removable parts, the removal of which would affect the accuracy of the instrument, shall be stamped, unless the parts are such that the instrument cannot be used without them.

91A. Where an instrument has interchangeable parts or reversible parts it shall not be stamped unless the interchange or reversal does not affect the accuracy of the instrument.

Beam-Scales.

92. All beam-scales shall be examined to ascertain that they comply with the Act and these rules.

93. With the pans loaded to half the capacity, no appreciable difference in the accuracy of the instrument shall result from moving the knife-edges or bearings laterally or backwards and forwards within their limts of movement.

The instrument shall be correct whether the load is on the middle or near the edge of the pan.

94. On beam-scales, the verification marks shall be placed on the stud or plug on the beam, immediately under or over the central knife-edge.

The Inspector may stamp any plug or stud in the same manner as he would stamp a weight, or by means of marking pincers.

94-A. No beam-scale which is to be stamped shall have a loaded weight pan.

Counter Machines.

95. All counter machines shall be examined to ascertain that they comply with the Act and these rules.

96. The minimum "fall", either way, on counter machines shall be as under :—

Capacity.	Inch.
Not exceeding 4 lbs. or 2 seers	1/4
Above 4 lbs. or 2 seers and not exceeding 7 lbs. or 3½ seers. ...	5/16
Above 7 lbs. or 3½ seers and not exceeding 28 lbs. or 14 seers ...	3/8
Above 28 lbs. or 14 seers and not exceeding 56 lbs. or 28 seers ...	7/16
Above 56 lbs. or 28 seers	1/2

97. With the pans loaded to half the capacity, no appreciable difference in the accuracy of the counter machine shall result from moving the knife-edges or bearings laterally or backwards and forwards within their limits of movement.

98. When the goods pan is not in the form of a scoop, the counter machine shall indicate the same weight within half the prescribed limits of error, if the centre of a load equal to half the capacity is placed on the goods pan anywhere within a distance from the centre equal to one-third the greatest length of the pan, or, if the pan has a vertical side, against the middle of that side; the weight being entirely on the weights pan but in any position on it.

99. When the goods pan is in the form of a scoop, the counter machine shall be correct, if half the full load is placed against the middle of the back of the scoop and the other half in any position on the scoop.

100. The verification stamp shall be placed upon the plug or stud provided for that purpose on a conspicuous part of the beam or body of the machine.

Spring Balances.

101. All spring balances shall be examined to ascertain that they comply with the Act and these rules.

102. (1) When the pan is below the spring, the prescribed limits of error shall not be exceeded wherever the load is placed upon it.

(2) Where the pan is above the spring, the rules regarding the position of the load on the pans of counter machines shall apply.

103. Each numbered graduation shall be tested; intermediate graduations may be tested if necessary.

The spring balances shall be correct, whether the test is forward or backward, provided that in either case the spring shall be allowed to vibrate before the reading is taken.

The Inspector may test the balance for efficiency or ability to recover, by leaving on the same a load equal to its maximum capacity for a period of twenty-four hours or less, and then, after the expiration of four hours may test the same for accuracy.

104. Spring balances of a capacity of 30 lbs. or 15 seers and under shall satisfy the requirements as regards error of counter machines of similar capacity.

For spring balances of a capacity of 40 lbs. or 20 seers and over, the error shall not exceed the weight corresponding to a quarter of the interval between consecutive graduations.

Spring balances shall not be tested for sensitiveness. (*See* Table XI.)

105. Spring balances shall be fitted with a soft metal plug to receive the Inspector's stamp, and, wherever practicable, the plug shall pass through the dial and frame. The plug shall be so supported as to avoid risk of injury to the instrument by stamping.

Steel yards.

106. The Inspector shall not stamp—

(*a*) any steel yard which is reversible and has three hooks ;

(*b*) any accelerating steel yard ;

(*c*) any counter steel yard ;

(*d*) any steel yard not having a zero graduation, or

(*e*) any steel yard of a capacity of less than 56 lbs.

unless the pattern thereof has been approved by the Director of Industries.

107. Each numbered graduation shall be tested, and the instrument shall be correct whether the test is forward or backward.

The allowances for error in the case of steel yards shall be twice those prescribed for counter machines or dead-weight machines of similar capacity.

108. The verification mark shall be placed upon the plug or stud on the front face of the shoulder of the steel yard.

Dead-Weight Machines.

109. The dead-weight machine shall indicate the same weight within half the prescribed limits of error, if a load of one-fourth the capacity is placed successively at the middle of the front and back of each platform, and centrally over the knife-edges on each side.

110. The plug or stud for the verification mark shall be placed on a conspicuous part of the beam or body of the machine.

Platform Machines and Weigh-Bridges.

111. Weigh-bridges, dormant platform machines, petrol pumps and such other weighing or measuring instruments as the Director of Industries may specify in this behalf shall be verified and stamped *in situ*, in addition to any preliminary test on the maker's or seller's premises.

112. The Inspector shall, in other than dial machines, proceed to test each numbered graduation up to one ton, or to such smaller amount as the last graduation on the steel yard may indicate. He shall then test the loose counterpoises where such are provided, and finally test the machine ton by ton, or load it with heavy material to within one ton of its maximum load, and ascertain that an additional ton is correctly indicated. With the necessary modifications, the test of dial machines shall be made in a similar manner.

113. With one-quarter the maximum load, or as near thereto as is practicable, the platform machine or the weigh-bridge shall indicate the same weight within half the prescribed limits of error, whether the load is placed on the middle or near the ends or corners of the platform.

114. When a platform machine is fitted with relieving gear the prescribed limits of error shall not be exceeded when the machine is put steadily out of and into gear. The plate or platform shall be entirely disengaged from its bearings when the machine is in relief.

115. On a dial machine the verification mark shall be made on a soft metal stud or plug fixed on the dial.

On a platform machine or weigh-bridge other than a dial machine, the mark shall be placed on the plug or stud in a conspicuous posit on, either on the shoulder or the opposite end of the indicating lever or steel yard.

Crane Machines.

116. Hydraulic machines in which it is necessary, in order to get a correct weight indication, to twist the load hook, shall not be stamped unless a prominent notice to this effect is permanently affixed to the machine.

The steel yard movement shall be correct, and the dial hand shall work freely and return to its initial starting point after the load is removed.

Each numbered division shall be tested as far as practicable.

117. The stamping plug shall be placed on a conspicuous part, either of the steel yard or of the dial of the machine.

Automatic Machines.

118. Automatic machines and their integral parts such as special beams and the like shall, except as may be otherwise provided by rules, satisfy the requirements of these rules so far as they are applicable as regards principle, detail, or material of construction.

It shall not be necessary to mark beams with any class, but they shall be identified with the machine by an indelible number or other sufficient mark of identification.

The adjusting mechanism shall be suitably secured or protected so that it cannot be readily tampered with.

The accuracy of the output of the machine shall be verified by re-weighing, over another weighing instrument, not less than twenty continuous loads ; or, where practicable, the machine may be tested directly by the application of standard weights.

In testing totalising machines, not less than forty loads shall be passed over the machine, namely, ten minimum loads, ten maximum loads and twenty loads of the mean between the minimum and maximum.

The stamping plug shall be placed upon the beam, shank, or dial of the machine.

Period of Verification.

119. (1) All weights, liquid and dry measures of capacity and measures of length and weighing instruments for or in use in retail and wholesale shops and in industrial establishments except such as are railways within the meaning of the Indian

Railways Act, 1890, or factories within the meaning of the Factories Act, 1934 shal be verified and stamped at least once in every two years.

(2 All weights, liquid and dry measures of capacity, measures of length and weighing instruments for or in use for trade in all places other than those mentioned in sub-rule (1) shall be verified and stamped at least once in every twelve months.

The circumstances and conditions under which and the manner in which stamps may be obliterated or defaced.

SECTION 41 (2) (*j*).

120. Subject to the provisos of this rule, the Inspector, on inspection, shall obliterate the stamp on—

(*a*) any weight, measure, or weighing or measuring instrument which cannot be stamped and made to conform to the requirements of these rules ;

(*b*) a measure of length, when the deficiency or excess exceeds four times the amount allowed on verification ;

(*c*) a measure of capacity (other than an apothecaries measure), if the error in deficiency is more than half that allowed in excess on verification, or if the error in excess is more than that allowed on verification ; and, on apothecaries glass measures, if the error is greater than that allowed on verification ;

(*d*) a weight, if the error in deficiency is more than half that allowed in excess on verification or if the error in excess is more than that allowed on verification ;

(*e*) a weight or measure if it does not admit of proper adjustment owing to its being broken, much indented or otherwise defective ;

(*f*) a weight or measure which, since the last stamping, has been repaired or re-adjusted so as to cease to conform with the requirements of these rules ;

(*g*) a weighing instrument, if the error exceeds twice, or if the deficiency in sensitiveness exceeds three times the amount allowed on verification ;

(*h*) an equal armed weighing instrument which, since the last stamping, has been repaired or adjusted so as to cease to conform with the requirements of these rules ; and any weighing instrument which, since the last stamping, has been so repaired or altered that it has become necessary to ascertain that the indications of the instrument remain correct throughout its range as, for instance, when an instrument is altered in design or construction or when new stays, levers or springs are introduced ;

(*i*) any weight or measure or weighing or measuring instrument due and not submitted for reverification and stamping ;

(*j*) any weight or weighing instrument used in contravention of rule 148 :

Provided that where the incorrectness of a weight, measure, or weighing or measuring instrument exceeds the limits laid down in this rule, the Inspector shall leave with the trader a notice calling on him to have the said weight, measure, or weighing or measuring instrument corrected within a stated period, not exceeding twenty-eight days, and shall obliterate the stamp if the correction has not been made within such period :

Provided further that where in a weighing instrument the in correctness is due merely to a need for re-balancing the instrument, the stamp shall not be defaced.

The tests to be applied for the purpose of ascertaining the accuracy and efficiency of weights and measures and weighing or measuring instruments.

SECTION 41 (2) (*k*).

121. The Inspector shall carry out the tests prescribed in rules made under section 41 (2) (*h*), 41 (2) (*i*) and in accordance with the schedule of instructions prepared for the purpose by the Director of Industries from time to time.

The limits of error to be allowed on verification and to be tolerated on inspection either generally or as regards any trade.

SECTION 41 (2) (*l*).

and

The amount of error to be tolerated in weights and measures and weighing or measuring instruments used or intended to be used for trade.

SECTION 41 (2) (*m*).

122. The amount of error to be tolerated in secondary and working standards when verified and re-verified shall be as specified in Table XX.

123. The amount of error to be allowed on verification and to be tolerated on inspection of weights and measures and weighing or measuring instruments used or intended to be used for trade shall be as specified in Tables I to XVII.

The amount of error to be tolerated in selling articles by measure as regards the textile trade.

SECTION 41 (2) (*mm*)

123-A. The amount of error to be tolerated when grey, white or coloured cotton piece-goods are sold on the basis of the length and width stamped on them, shall be as specified in Table XX-A.

Fees.

SECTION 41 (2) (*n*).

124. Fees to be charged for verification, re-verification and stamping weights and measures shall be as prescribed in Table XXI.

125. The fees to be charged for verification, re-verification and stamping, weighing and measuring instruments shall be as prescribed in Tables XXII and XXII-A respectively.

126. The fees prescribed in Tables XXI, XXII and XXII-A do not include fees for adjustment. The Inspectors are permitted only to carry out minor adjustments at an extra fee to be fixed by the Director of Industries in each individual case.

127. (1) The fees chargeable for the verification and stamping of weights, measures, or weighing or measuring instruments at the office of the Inspector shall be at the rates prescribed in Tables XXI, XXII and XXII-A as the case may be.

(2) If such verification or stamping is done by the Inspector at the premises of any person, the fees chargeable for such verification and stamping shall be at the rates prescribed in the said tables :

Provided that after the expiry of two years from the date when these rules shall have come into force in any district or municipal area, in addition to the fee chargeable as aforesaid, an extra fee at the rates equal to half the rates prescribed in the

said tables, together with the actual travelling expenses of the Inspector incurred in carrying out such verification and stamping, shall be charged :

Provided further that in the case of verification or stamping of petrol or fuel oil vehicles or weighing and measuring instruments mentioned in rule 111 at the premises of any person, or if the verification or stamping is done by the Inspector at the premises of a manufacturer or stockist of weights, measures, and weighing or measuring instruments, the extra fee prescribed in the above proviso shall not be charged, but such person, manufacturer or stockist shall, in addition to the fee leviable at the rates prescribed in the said tables, be liable to pay the travelling expenses incurred by the Inspector in visiting the premises of such person, manufacturer or stockist for the purpose of carrying out the verification or stamping.

Such travelling expenses shall include any travelling and daily allowance payable to the Inspector in accordance with the Bombay Civil Services Rules to which the said Inspector would be entitled, if the verification or stamping has to be carried out at a place outside the headquarters of such Inspector.

127-A. Notwithstanding anything contained in rules 124–127 no fees shall be charged for restamping weights, etc., within the period of one year or two years as prescribed in rule 119 of these rules from the date on which they were last stamped against payment of fees provided that the original stamp on the weights, etc., was not obliterated under rule 120.

127-B. In addition to the fees prescribed in Tables XXI, XXII and XXIIA, the Inspector shall be entitled to the actual cost of cartage, carriage, lifting of standards and travelling expenses incurred by him for verification or re-verification or stamping of a weight, measure, or a weighing or measuring instrument.

Explanation.—For the purposes of this rule travelling expenses shall include the travelling allowances payable under sub-rule (2) of rule 127.

128. Before commencing the work of verification or re-verification, the Inspector shall inform the person concerned of the fees payable by him under the rules, and shall receive the same and issue a receipt, two copies of such receipt shall be kept on record. The receipt shall be in the form approved by the Director of Industries.

129. A weight, measure, or weighing or measuring instrument which on verification is found to be incorrect shall be returned to the person concerned for adjustment. When the necessary adjustment has been carried out, such weight, measure or weighing or measuring instrument shall be re-verified on payment of 50 per cent. of the prescribed fees and if found correct shall be stamped.

130. When a weight, measure, or weighing or measuring instrument is returned as incorrect, the Inspector shall inform the person concerned in writing of the defects found in the weight, measure, or weighing or measuring instrument.

131. The Inspector shall maintain a register which shall be written up from day to day and shall show the amount of fees and carriage charges collected during the day.

132. The entire payments collected by the Government Inspector shall be paid by him into the local Government treasury every Saturday for credit to XXV Industries and a receipt obtained which shall be pasted in the accounts register and intimation to that effect shall be sent by him to the Director of Industries.

133. The fees payable by makers and stockists of working and secondary standards and weighing instruments for verification, re-verification and stamping by a Government Inspector or the Director of Industries, shall be as prescribed in Table XXIII.

The seizure, detention and destruction of weights and measures and weighing or measuring instruments which are not authorised by this Act and in regard to which no regulations have been made under section 41.

SECTION 41 (2) (o).

134. (1) An Inspector authorised under section 22 may enter any place within the area for which he is appointed where he has reason to believe that there are any weights, measures, or weighing or measuring instruments for use in trade, to inspect and test them and to seize and detain such weights, measures and weighing or measuring instruments as are liable to be seized and detained.

(2) Weights and measures and measuring instruments shall be liable to be seized and detained if—

(a) they are not of the denomination of a standard weight or measure specified in the First Schedule of the Act;
(b) they are false or defective;
(c) wilful fraud is committed in using them;
(d) they are unstamped;
(e) the stamp on them is forged or transferred.

(3) (a) The following weighing instruments, namely, beam scales, spring balances counter machines and steel yards, shall be liable to seizure and detention in cases (a), (b), (c), (d) and (e) specified in sub-rule (2); and

(b) Weighing instruments other than those specified in clause (a) shall be liable to seizure and detention in cases (b), (c) and (e) but not in cases (a) and (d) specified in sub-rule (2).

(4) Any weight or measure or weighing or measuring instrument seized and detained under sub-rule (2) or (3) which is not to be the subject of proceedings in a court, shall, after the expiry of one month after its seizure, be so dealt with as the Director of Industries may by general or special order direct, and the materials thereof shall be sold and the proceeds credited to Government.

135. Any weight or measure or weighing or measuring instrument liable to seizure and detention which is to be the subject of proceedings in a Court shall be seized and detained by the Inspector for being produced before the Court.

The qualifications, functions and duties generally of Inspectors under this Act and the rules and regulations.

SECTION 41 (2) (q).

136. *Qualificaions.*—No person shall be appointed an Inspector unless he—

(1) (a) is a graduate of a recognised University in Electrical Engineering or in Mechanical Engineering or in Physics and any other Science subject; or
(b) is a second or first class diploma holder (L.M.E. or L.E.E.) of the Victoria Jubilee Technical Institute Bombay or that of the College of Engineering, Poona, or the N. E. D. College of Engineering, Karachi, or the Kala-Bhavan Technical Institute, Baroda, or Faraday House, London in Electrical Engineering or/and Mechanical Engineering;
(2) is able to speak, read and write English and at least one vernacular of the State;
(3) had training for at least two months in the Bombay Weights and Measures Department;
(4) had practical workshop experience of at least two years;

137. *Functions and Duties.*—The duties of an Inspector are—

(*a*) the safe and proper custody of the secondary and working standards and other equipment given in his charge ;

(*b*) verification and stamping of weights and measures, etc. ;

(*c*) inspections ;

(*d*) collections of fees and charges and submission of the reports and returns prescribed in the rules and laid down by the Director of Industries.

Any other matters for which no provision or insufficient provision is made in this Act and for which provision is, in the opinion of Government, necessary.

SECTION 41 (*2*) (*r*).

138. On the appointment or the termination of the appointment of an Inspector amunicipality or district local board authorised under section 19 to appoint Inspectors shall give notice thereof to the Director of Industries.

139. A municipality or district local board authorised under section 19 to appoint Inspectors shall issue to their Inspectors the schedule of instructions prepared by the Director of Industries mentioned in rule 121 and shall not issue any instructions inconsistent with the said schedule.

It shall be the duty of the municipality or district local board concerned to see that their Inspectors act in compliance with such instructions.

140. Every Inspector shall be provided by the authority appointing him with working standards, scale-beams, and balances for testing weights, adequate instrumental equipment, and travelling kit for inspection, of such material and form as may from time to time be approved by the Director of Industries.

141. Every Inspector shall be provided by the authority appointing him with such dies, punches, stencil plates, branding irons, etching and engraving and other implements, as may be necessary for affixing the local verification stamp, the design and number of which are furnished by the Director of Industries.

The Inspector shall be provided with punches, of suitable sizes, of eight pointed star design, as shown in the illustration below for obliterating stamps :—

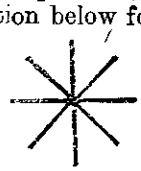

142. Every Inspector shall be provided by the authority appointing him with an adequate office accommodation, to the satisfaction of the Director of Industries in a business area together with cupboards, etc., for the due security of his standards, instruments, and books.

Unless no other suitable premises are available, the office of the Inspector shall not be located on the premises where intoxicating liquors are sold, or where retail trade is carried on, and the location of such office shall as far as may be practicable be selected with a view to freedom from vibration.

143. Where in the special circumstances of any case it appears to an Inspector to be impracticable to comply literally with any requirement of these rules, he shall consult the authority appointing him thereon with the view to refer the matter to the Director of Industries and the Director may, on such reference if he thinks fit, dispense with the observance of such requirement.

144. In any area in which there are both Inspectors appointed by Government and Inspectors appointed by a municipality or district local board, each Inspector shall be given jurisdiction over a part of such area subject however to the assignment

to a Government Inspector of the duty of supervision and stamping over the whole area. Each part of the area shall be distinguished by some number, name or mark. The extent [of allotment] of the jurisdiction of Inspectors shall be determined by the Director of Industries in consultation with the municipality or district local board concerned.

Provided that Government may, by special or general order, direct that an Inspector appointed by a municipality or a district local board shall not exercise jurisdiction over any place, premises or undertaking or any part thereof.

145. (1) Every manufacturer of, or dealer in, weights, measures or weighing or measuring instruments shall register his address with the Director of Industries and shall inform him forthwith of any change in the address so registered.

(2) Every repairer of weights, measures or weighing or measuring instruments shall apply to the Director of Industries for registering his name and address. The Director of Industries shall on assuring himself that he is a competent repairer and possesses a regular workshop and tools, register his name, and address in his office. Such registered repairers shall inform the Director of Industries forthwith of any change in the address so registered.

(3) The Director of Industries may refuse, revoke, suspend or cancel the registration of any manufacturer of, or dealer in, or repairer of weights, measures or weighing or measuring instruments on the ground of want of proper and adequate workshop facilities or staff or incompetency or failure to observe any of the provisions of the Act or these rules.

146. An appeal from any decision under sub-section (*1*) of section 25 shall lie to the Director of Industries within two months from the date of such decision.

147. (*a*) Every Inspector shall keep and maintain such books and use such forms in connection with his work as may be laid down by the Director of Industries.

(*b*) The books and forms mentioned in rule (*a*) above shall be supplied to the Inspector by the authority appointing him.

148. (1) Weighing instruments used by the following classes of traders shall be beam scales of either class A or class B or such instruments other than beam scales as satisfy the requirements of Table VIII and shall not be verified, re-verified or stamped by Inspectors if they are not instruments of the kind specified in this sub-rule :—

(*i*) Gold and silver merchants and bullion dealers.

(*ii*) Dealers in precious metals and precious stones and jewellers.

(*iii*) Retail chemists and druggists.

(*iv*) Silk merchants.

(*v*) Dealers in perfumery.

(*vi*) Any other class or classes of traders as the Director of Industries may specify.

(2) Beam scales used by the following classes of traders shall be either of class A, class B or class C, and shall not be verified, re-verified or stamped by Inspectors if they do not belong to one of these classes :—

(*i*) Retail and wholesale dealers in base metals.

(*ii*) Retail and wholesale dealers in tea, coffee, tobacco and cotton.

(*iii*) Retail and wholesale dealers in ghee, spices and butter.

(*iv*) Any other class or classes of traders as the Director of Industries may specify.

(3) Weights used by the classes of traders mentioned in clauses (*i*) and (*ii*) of sub-rule (1) shall be Bullion Tola weights and Rati weights, respectively, and shall not be verified, re-verified or stamped by Inspectors if they are not Bullion Tola weights or Rati weights, respectively.

TABLE I.

SEER AND MAUND WEIGHTS.

(*See* Rule 123.)

Verification.		Seer and Maund weights.		Inspection.	
Error in Excess only.				Error in Deficiency.	
Iron weights.	Other than iron weights.			Iron weights	Other than iron weights.
84 grains ...	42 grains ...	1 maund ...	Error in excess same as on verification.	42 grains ...	21 grains.
48 ,, ...	24 ,, ...	20 seers ...		24 ,, ...	12 ,,
30 ,, ...	15 ,, ...	10 ,, ...		15 ,, ...	7·5 ,,
20 ,, ...	10 ,, ...	5 ,, ...		10 ,, ...	5 ,,
15 ,, ...	7·5 ,, ...	3 ,, ...		7·5 ,, ...	3·75 ,,
13·5 ,, ...	6·75 ,, ...	2½ ,, ...		6·75 ,, ...	3·5 ,,
12 ,, ...	6 ,, ...	2 ,, ...		6 ,, ...	3 ,,
8 ,, ...	4 ,, ...	1 seer ...		4 ,, ...	2 ,,
4 ,, ...	3 ,, ...	½ ,, ...		2 ,, ...	1·5 ,,
4 ,, ...	2 ,, ...	¼ ,, ...		2 ,, ...	1 grain.
4 ,, ...	2 ,, ...	⅛ ,, ...		2 ,, ...	1 ,,
	1 grain ...	1/16 ,, ...			0·5 ,,
	0·5 ,, ...	1/32 ,, ...			0·25 ,,
	0·5 ,, ...	2 tolas and under.			0·25 ,,

TABLE I-A.

BULLION TOLA WEIGHTS.

(*See* Rule 123.)

Denomination.	Verification. Errors in Excess only.		Inspection. Error in Deficiency.
2,000 Tolas	6 grains ...	Error in excess same as on verification.	3 grains.
1,000 ,, ...	5 ,, ...		2·5 ,,
500 ,, ...	4 ,, ...		2 ,,
300 ,, ...	4 ,, ...		2 ,,
200 ,, ...	2 ,, ...		1 grain.
100 ,, ...	1 grain ...		·5 ,,
50 ,, ...	·7 ,, ...		·35 ,,
30 ,, ...	·7 ,, ...		·35 ,,
20 ,, ...	·5 ,, ...		·25 ,,
10 ,, ...	·4 ,, ...		·2 ,,
5 ,, ...	·3 ,, ...		·15 ,,
4 ,, ...	·25 ,, ...		·125 ,,
3 ,, ...	·2 ,, ...		·1 ,,
2 ,, ...	·15 ,, ...		·075 ,,
1 Tola	·1 ,, ...		·05 ,,
½ ,, ...	·1 ,, ...		·05 ,,
¼ ,, ...	·1 ,, ...		·05 ,,
⅛ ,, ...	·05 ,, ...		·025 ,,
1/16 ,, ...	·05 ,, ...		·025 ,,
1 Val	·02 ,, ...		·01 ,,
½ ,, ...	·02 ,, ...		·01 ,,
¼ ,, ...	·01 ,, ...		·005 ,,

TABLE I-B.

Rati Weights.

(*See* Rule 123.)

Denomination.	Verification. Error in Excess only.		Inspection. Error in Deficiency.
240 Ratis	·2 grain	Error in excess same as on verification	·1 grain.
120 ,,	·15 ,,		·075 ,,
72 ,,	·1 ,,		·05 ,,
48 ,,	·1 ,,		·05 ,,
24 ,,	·1 ,,		·05 ,,
12 ,,	·05 ,,		·025 ,,
6 ,,	·05 ,,		·025 ,,
3 ,,	·05 ,,		·025 ,,
2 ,,	·02 ,,		·01 ,,
1 Rati	·02 ,,		·01 ,,
½ ,,	·01 ,,		·005 ,,
¼ ,,	·01 ,,		·005 ,,
1/8 ,,	·005 ,,		·0025 ,,
1/16 ,,	·005 ,,		·0025 ,,
1/32 ,,	·002 ,,		·001 ,,
1/64 ,,	·002 ,,		·001 ,,

TABLE II.

Avoirdupois Weights.

(*See* Rule 123.)

Verification. Error in Excess only.		Avoirdupois.		Inspection. Error in Deficiency.	
Iron weights.	Other than iron weights.			Iron weights.	Other than iron weights.
100 grains	50 grains	100 lb.	Error in excess same as on verification.	50 grains	25 grains.
60 ,,	30 ,,	56 ,,		30 ,,	15 ,,
55 ,,	27.5 ,,	50 ,,		27·5 ,,	13·75 ,,
40 ,,	20 ,,	28 ,,		20 ,,	10 ,,
30 ,,	15 ,,	20 ,,		15 ,,	7·5 ,,
24 ,,	12 ,,	14 ,,		12 ,,	6 ,,
20 ,,	10 ,,	10 ,,		10 ,,	5 ,,
16 ,,	8 ,,	7 ,,		8 ,,	4 ,,
14 ,,	7 ,,	5 ,,		7 ,,	3·5 ,,
12 ,,	6 ,,	4 ,,		6 ,,	3 ,,
8 ,,	4 ,,	2 ,,		4 ,,	2 ,,
4 ,,	3 ,,	1 ,,		2 ,,	1·5 ,,
4 ,,	2 ,,	8 oz.		2 ,,	1 grain.
4 ,,	2 ,,	4 ,,		2 ,,	1 ,,
	1 grain	2& 1 ,,			0·5 ,,
	0·5 ,,	8 drs. to ½ dram.			0·25 grains.

TABLE II-A.

Imperial Grain Weights.

(*See* Rule 123.)

Verification. Error in Excess only.	Denomination Grain Weights.		Inspection. Error in Deficiency.
0·5 grain	4,000, 2,000 ...	Error in excess same as on verification.	0·25 grain.
0·2 "	1,000, 500 ...		0·1 "
0·1 "	300, 240, 200, 120, 100 ...		0·05 "
0·05 "	72, 60, 50, 48, 30, 24, 20, 16, 12, 10.		0·025 "
0·02 "	8, 6, 5, 4, 3 ...		0·01 "
0·01 "	2, 1, ·6 ·5 ...		0·005 "
0·005 "	·3 ...		0·0025 "
0·002 "	·25, ·2, ·1 ...		0·001 "
0·001 "	·06, ·05, ·03, ·02, ·01 ...		0·0005 "

TABLE II-B.

Apothecaries' Weights.

(*See* Rule 123.)

Verification. Error in Excess only.	Denomination Apothecaries' Weights.		Inspection. Error in Deficiency.
0·7 grain ...	10 oz. Apoth ...	Error in excess same as on verification.	0·35 grain.
0·6 "	8 " " ...		0·3 "
0·5 "	6 " " ...		0·25 "
0·4 "	4 " " ...		0·2 "
0·3 "	2 " " ...		0·15 "
0·2 "	1 " " (480 grains) ...		0·1 "
0·1 "	4 (or ½ oz. Apoth), 2, 1 drachm.		0·05 "
0·08 "	2 Scrupless ...		0·04 "
0·07 "	1½ " (or ½ drachm) ...		0·035 "
0·06 "	1 Scruple ...		0·03 "
0·05 "	½ " ...		0·025 "
0·04 "	6 grains ...		0·02 "
0·02 "	5, 4, 3 grains ...		0·01 "
0·01 "	2 1, ½ grains ...		0·005 "

TABLE III.

Dry Measures of Capacity.

(*See* Rule 123.)

Verification. Error in Excess only.	Denomination.		Inspection. Error in Deficiency.
25 cubic inches	2 maunds ...	Error in excess same as allowed on verification.	12½ cubic inches.
16 „ „	¾ maund ...		8 „ „
15 „ „	½ „ ...		7½ „ „
13 „ „	¼ „ ...		6½ „ „
11 „ „	⅛ „ ...		5½ „ „
8 „ „	1/16 „ and 2 seers or adholi.		4 „ „
3½ „ „	1 seer ...		1¾ „ „
2 „ „	½ „ ...		1 cubic inch.
1 cubic inch	¼ „ ...		½ „
½ „ „	⅛ „ ...		¼ „ „
¼ „ „	1/16 „ ...		½ „ „
⅛ „ „	1/32 „ ...		⅛ „ „

TABLE IV.

Liquid Measures of Capacity (Seers and Maunds).

(*See* Rule 123.)

Verification. Error in Excess only.			Capacity of measure to the Graduation tested.		Inspection. Error in Deficiency.		
Ordinary.	Conical Metal.	Enamelled Metal, Glass and Earthenware.			Ordinary.	Conical Metal.	Enamelled Metal, Glass and Earthenware.
4 fl. oz.	2 fl. oz.	8 fl. oz.	40 seers and 30 seers	Error in excess same as on verification.	2 fl. oz.	1 fl. oz.	4 fl. oz.
3 „	1½ „	6 „	20 seers and 10 seers		1½ „	¾ „	3 „
2 „	1 „	4 „	8 to 4 seers ...		1 „	4 fl. dr.	2 „
1 „	4 fl. dr.	2 „	2 seers and 1 seer ...		4 fl. dr.	2 „	1 „
4 fl. dr.	2 „	1 „	½ seer ...		2 „	1 „	4 fl. dr.
3 „	1½ „	4 fl. dr.	¼ „ ...		1½ „	¾ „	2 „
2 „	1 „	2 „	1/8 „ ...		1 „	½ „	1 „
1 „	½ „	1 „	1/16 „ ...		½ „	15 min.	½ „
½ „	15 min.	½ „	1/32 „ ...		15 min.	7½ „	15 min.
20 min.	10 „	20 min.	1/64 „ ...		10 „	5 „	10 „

TABLE IV-A.

Liquid Measures of Capacity.

Liquor Dram and Peg.

(*See* Rule 123.)

Verification.	Denomination.		Inspection.
Error in Excess only.			Error in Deficiency.
½ fl. dram.	¼ dram	Error in excess same as on verification.	15 min.
½ „ „	½ „		15 „
1 „ „	1 „		½ fl. dram.
2 fl. drams.	2 drams		1 „ „
3 „ „	4 „		1½ „ „
6 „ „	8 „		3 „ „
½ fl. dram.	½ Peg		15 min.
1 „ „	1 „		½ fl. dram.

TABLE IV-B.

Imperial Apothecaries' Graduated Glass Measures.

(*See* Rule 123.)

Approximate internal diameter of measure at the graduation tested.	Verification or Inspection. Errors in excess or deficiency.	
	Cylindrical and Conical Shape.	Glass Flasks and Burettes.
Inches.	Minims.	Minims.
4	25	12½
3½	21	10½
3	18	9
2½	14	7
2	11	5½
1¾	9	4½
1½	7	3½
1¼	6	3
1	4	2
7/8	3	1½
3/4	2	1
5/8	1	½
½	½	¼

TABLE V.

Imperial Liquid Measures of Capacity (Gallons).

(*See* Rule 123.)

Verification.				Capacity of Measure to the graduation tested.		Inspection.			
Error in Excess only.						Error in Deficiency.			
Ordinary.	Conical Metal.	Milk Churns.	Enamelled Metal Glass and Earthenware.			Ordinary.	Conical Metal.	Milk Churns.	Enamelled Metal Glass and Earthenware.
15 fl. oz.	...	...	...	64 gall. to 33.	Error in excess same as on verification.	7½ fl.oz.	...	...	...
10 ,,	5 fl.oz.	20 fl.oz.	...	32 gall. to 20 gall.		5 ,,	2½ fl.oz.	10 fl.oz.	...
5 ,,	2½ ,,	10 ,,	...	Under 20 gall. to 8 gall.		2½ ,,	1¼ ,,	5 ,,	...
3 ,,	1½ ,,	6 ,,	...	Under 8 gall. to 4 gall.		1½ ,,	6 fl.dr.	3 ,,	...
2 ,,	1 ,,	...	4 fl.oz.	3, 2, and 1 gall.		1 ,,	4 ,,	...	2 fl.oz.
1 ,,	4 fl.dr.	...	2 ,,	Half-gallon and Quart.		4 fl.dr.	2 ,,	...	1 ,,
4 fl.dr.	2 ,,	...	1 ,,	Pint ...		2 ,,	1 ,,	...	4 fl.dr.
3 ,,	1½ ,,	...	4 fl.dr.	Half-pint ...		1½ ,,	¾ ,,	...	2 ,,
2 ,,	1 ,,		2 ,,	Gill		1 ,,	½ ,,		1 ,,
1 ,,	½ ,,	...	1 ,,	Half-gill ...		½ ,,	15 min.	...	½ ,,
½ ,,	15 min.	...	½ ,,	Quarter-gill.		15 min.	7½ ,,	...	15 min.

Note.—For each additional 20 Gallons or fraction thereof in the case of ordinary types of measures, an additional 5 fl. oz. shall be allowed in the case of error in excess on verification and half of that in the case of deficiency on inspection.

TABLE V-A.

Petrol Pumps.

(*See* Rule 123.)

Verification.	Capacity.		Inspection.
Error in Excess only.			Error in Deficiency.
15 fluid oz.	64 gal. to 33 gal. ...	Error in excess as on verification.	7½ fluid oz.
10 ,, ,, ...	32 gal. to 20 gal. ...		5 ,, ,,
5 ,, ,, ...	Under 20 gal. to 8 gal. ...		2½ ,, ,,
3 ,, ,, ...	Under 8 gal. to 4 gal. ...		1½ ,, ,,
1 ,, ,, ...	3, 2, and 1 gal. ...		½ ,, ,,

TABLE VI.

MEASURES OF LENGTH.

(*See* Rule 123.)

Verification.				Denomination.	Inspection.			
Error (in parts of an inch).					Error (in parts of an inch).			
End Measures.		Line Measures.			End Measures.		Line Measures.	
Long, or in Excess.	Short, or in Deficiency.	Long, or in Excess.	Short, or in Deficiency.		Long, or in Excess.	Short, or in Deficiency.	Long, or in Excess.	Short, or in Deficiency.
..	..	0·3	0·3	Metal ..	..	..	1·2	1·2
				100, 50 feet.				
..	..	0·2	0·2	33 ft. ..	..	..	0·8	0·8
				20, 10 feet.				
..	..	0·05	0·05	9, 8, 7, 6, 5, 4 ft. ..	..	..	0·2	0.2
				66, 54, 42 inches.				
0·03	0·015	0·02	0·01	3 feet (yard) ..	0·12	0·06	0·08	0·04
				2 feet, 1 foot.				
				30, 18 inches.				
0·01	0·01	0·005	0·002	Under 1 foot ..	0·04	0·04	0·02	0·0408
..	..	0·06	0·06	Other than metal ..	..	..	2·4	
				100, 50 feet.				
..	..	0·04	0·04	33 feet ..	..	..	1·6	1·6
				20, 10 feet.				
..	..	0·1	0·1	9, 8, 7, 6, 5, 4 ft. ..	..	..	0·4	0·4
				66, 54, 42 inches.				
0·06	0·03	0·04	0·02	3, feet (yard) ..	0·24	0·12	0·16	0·08
				2 feet, 1 foot.				
				30, 18 inches.				
0·02	0·02	0·01	0·004	Under 1 foot ..	0·08	0·08	0·04	0·016

The allowance for error on "end" measures above 3 feet may be the same as those tolerated for "line" measures.

TABLE VII.

Beam-Scales—Class A.

(*See* Rules 40 and 123.)

Verification.			Inspection.	
Sensitiveness when fully loaded.	Greatest error allowed either in excess or deficiency when fully loaded.	Capacity.	Sensitiveness when fully loaded.	Greatest error allowed either in excess or deficiency when fully loaded.
0·05 grain	0·1 grain ..	1 oz. or 1/32 seer	0·15 grain ..	0·2 grain.
0·1 ,, ...	0·2 ,, ..	1 lb. or ½ seer ..	0·3 ,, ..	0·4 ,,
0·5 ,, ...	1·0 ,, ..	7 lbs. or 3½ seers	1·5 grains ..	2·0 grains.
1·5 grains	2·0 grains	56 lbs. or 28 seers.	4·5 ,, ..	4·0 ,,
·03 grain	·06 grain ..	½ oz. or 1 tola .	·09 gr. ..	·12 grain.
·015 ,, ...	·03 ,, ..	¼ ,, or ½ ,, ..	·045 ,, ..	·06 ,,
·006 ,, ...	·012 ,, ..	⅛ ,, or ¼ ,, ..	·018 ,, ..	·024 ,,

TABLE VIII.

Beam-scales (Class B) and other Weighing Instruments.

(*See* Rules 40 and 123.)

Verification.			Inspection.	
Sensitiveness when fully loaded.	Greatest error allowed either in excess or in deficiency when fully loaded.	Capacity.	Sensitiveness when fully loaded.	Greatest error allowed eithers in excess or in deficiency when fully loaded.
1/5 grain ...	1/5 grain ...	1 oz or 1/32 seer ...	3/5 grain ...	2/5 grain.
11/35 ,, ...	11/35 ,, ...	2 ,, ,, 1/16 ,, ...	33/35 ,, ...	22/35 ,,
19/35 ,, ...	19/35 ,, ...	4 ,, ,, 1/8 ,, ...	1·22/35 ,, ...	1·3/35 ,,
1 ,, ...	1 ,, ...	8 ,, ,, 1/4 ,, ...	3 grains ...	2 grains.
1 ,, ...	1 ,, ...	1 lb. or 1/2 ,, ...	3 ,, ...	2 ,,
1½ grains ...	2 grains ...	2 ,, ,, 1 ,, ...	4½ grains ...	4 ,,
3 grains ...	4 grains ...	4 lb. or 2 seers. ...	9 grains ...	8 grains.
4 ,, ...	6 ,, ...	7 ,, ,, 3½ ,, ...	12 ,, ...	12 ,,
6 ,, ...	9 ,, ...	10 ,, ,, 5 ,, ...	18 ,, ...	18 ,,
8 ,, ...	12 ,, ...	14 ,, ,, 7 ,, ...	24 ,, ...	24 ,,
11 ,, ...	16 ,, ...	20 ,, ,, 10 ,, ...	33 ,, ...	32 ,,
15 ,, ...	22 ,, ...	28 ,, ,, 14 ,, ...	45 ,, ...	44 ,,
25 ,, ...	40 ,, ...	56 ,, ,, 28 ,, ...	75 ,, ...	80 ,,
1½ drams ...	2½ drams ...	1 cwt. or 1½ mds. ...	4½ drams. ...	5 drams.
2½ ,, ...	3½ ,, ...	2 ,, ,, 3 ,, ...	7½ ,, ...	7 ,,
3 ,, ...	4½ ,, ...	3 ,, ,, 4 ,, ...	9 ,, ...	9 ,,
3½ ,, ...	5½ ,, ...	4 ,, ,, 5½ ,, ...	10½ ,, ...	11 ,,
4 ,, ...	6½ ,, ...	5 ,, ,, 7 ,, ...	12 ,, ...	13 ,,
4½ ,, ...	7½ ,, ...	6 ,, ,, 8 ,, ...	13½ ,, ...	15 ,,
5 ,, ...	8½ ,, ...	7 ,, ,, 10 ,, ...	15 ,, ...	17 ,,
5½ drams ...	9½ drams ...	8 cwt. or 11 mds. ...	16½ drams ...	19 drams.
6 ,, ...	10½ ,, ...	9 ,, ,, 12½ ,, ...	18 ,, ...	21 ,,
6½ ,, ...	11½ ,, ...	10 ,, ,, 14 ,, ...	19½ ,, ...	23 ,,
9 ,, ...	16½ ,, ...	15 ,, ,, 21 ,, ...	27 ,, ...	33 ,,
11½ ,, ...	21½ ,, ...	20 ,, ,, 28 ,, ...	34½ ,, ...	43 ,,
16½ ,, ...	31½ ,, ...	30 ,, ,, 41 ,, ...	49½ ,, ...	63 ,,
·1 grain ...	·1 grain ...	½ oz. or 1 tola ...	·3 grain ...	·2 grain.
·05 ,, ...	·05 ,, ...	¼ ,, ,, ½ ,, ...	·15 ,, ...	·1 ,,
·03 ,, ...	·03 ,, ...	⅛ ,, ,, ¼ ,, ...	·09 ,, ...	·06 ,,

TABLE IX.

Beam-Scales—Class C.

(*See* Rules 40 and 123.)

Verification.			Inspection.	
Sensitiveness when fully loaded.	Greatest error allowed either in excess or in deficiency when fully loaded.	Capacity.	Sensitiveness when fully loaded.	Greatest error allowed either in excess or in deficiency when fully loaded.
3/5 gr.	3/5 gr.	1 oz. or 1/32 seer.	1·4/5 gr.	1·1/5 gr.
33/35 ,,	33/35 ,,	2 ,, ,, 1/16 ,,	2·29/35 ,,	1·31/35 ,,
1·22/35 ,,	1·22/35 ,,	4 ,, ,, ⅛ ,,	4·31/35 ,,	3·9/35 ,,
3 ,,	3 ,,	8 ,, ,, ¼ ,,	9 ,,	6 ,,
3 ,,	3 ,,	1 lb. ,, ½ ,,	9 ,,	6 ,,
4½ ,,	6 ,,	2 ,, ,, 1 ,,	13½ ,,	12 ,,
9 gr.	12 gr.	4 lb. or 2 seers.	27 gr.	24 gr.
12 ,,	18 ,,	7 ,, ,, 3½ ,,	36 ,,	36 ,,
18 ,,	27 ,,	10 ,, ,, 5 ,,	54 ,,	54 ,,
24 ,,	36 ,,	14 ,, ,, 7 ,,	72 ,,	72 ,,
33 ,,	48 ,,	20 ,, ,, 10 ,,	99 ,,	96 ,,
45 ,,	66 ,,	28 ,, ,, 14 ,,	135 ,,	132 ,,
75 ,,	120 ,,	56 ,, ,, 28 ,,	225 ,,	240 ,,
4¼ dr.	7½ dr.	1 cwt. or 1½ mds.	13½ dr.	15 dr.
7½ ,,	10½ ,,	2 ,, ,, 3 ,,	1 oz. 6½ ,,	1 oz. 5 ,,
9 ,,	13½ ,,	3 ,, ,, 4 ,,	1 ,, 11 ,,	1 ,, 11 ,,
10½ ,,	16½ ,,	4 ,, ,, 5½ ,,	1 ,, 15½ ,,	2 ,, 1 ,,
12 ,,	1 oz. 3½ ,,	5 ,, ,, 7 ,,	2 ,, 4 ,,	2 ,, 7 ,,
13½ ,,	1 ,, 6½ ,,	6 ,, ,, 8 ,,	2 ,, 8½ ,,	2 ,, 13 ,,
15 ,,	1 ,, 9½ ,,	7 ,, ,, 10 ,,	2 ,, 13 ,,	3 ,, 3 ,,
16½ dr.	1 oz. 12½ dr.	8 cwt. or 11 mds.	3 oz. 1½ dr.	3 oz. 9 dr.
1 oz. 2 ,,	1 ,, 15½ ,,	9 ,, ,, 12½ ,,	3 ,, 6 ,,	3 ,, 15 ,,
1 ,, 3½ ,,	2 ,, 2½ ,,	10 ,, ,, 14 ,,	3 ,, 10½ ,,	4 ,, 5 ,,
1 ,, 11 ,,	3 ,, 1½ ,,	15 ,, ,, 21 ,,	5 ,, 1 ,,	6 ,, 3 ,,
2 ,, 2½ ,,	4 ,, 1½ ,,	20 ,, ,, 28 ,,	6 ,, 7½ ,,	8 ,, 1 ,,
3 ,, 1½ ,,	5 ,, 14½ ,,	30 ,, ,, 41 ,,	9 ,, 4½ ,,	11 ,, 13 ,,

TABLE IX-A.

BEAM-SCALES—CLASS D.

(*See* Rules 40 and 123.)

Verification.		Capacity.	Inspection.	
Sensitiveness when fully loaded.	Greatest error allowed either in excess or in deficiency when fully loaded.		Sensitiveness when fully loaded.	Greatest error allowed either in excess or in deficiency when fully loaded.
3 gr.	3 gr.	1 oz. or 1/32 seer.	9 gr.	6 gr.
5 ,,	5 ,,	2 ,, ,, 1/16 ,,	15 ,,	10 ,,
8 ,,	8 ,,	4 ,, ,, 1/8 ,,	24 ,,	16 ,,
15 ,,	15 ,,	8 ,, ,, ¼ ,,	45 ,,	30 ,,
15 ,,	15 ,,	1 lb. ,, ½ ,,	45 ,,	30 ,,
22½ ,,	30 ,,	2 ,, ,, 1 ,,	67½ ,,	60 ,,
45 ,,	60 ,,	4 ,, ,, 2 seers.	135 ,,	120 ,,
60 ,,	90 ,,	7 ,, ,, 3½ ,,	180 ,,	180 ,,
90 ,,	135 ,,	10 ,, ,, 5 ,,	270 ,,	270 ,,
120 ,,	180 ,,	14 ,, ,, 7 ,,	360 ,,	360 ,,
6 dr.	8¾ dr	20 lb. ,, 10 ,,	1 oz. 2 dr.	1 oz. 1½ dr.
8 ,,	12 ,,	28 ,, ,, 14 ,,	1 ,, 8 ,,	1 ,, 8 ,,
14 ,,	1 oz. 6 ,,	56 ,, ,, 28 ,,	2 ,, 10 ,,	2 ,, 12 ,,
1 oz. 5¼ ,,	2 ,, 5½ ,,	1 cwt. ,, 1½ mds.	3 ,, 15¾ ,,	4 ,, 11 ,,
2 ,, 5¼ ,,	3 ,, 4½ ,,	2 ,, ,, 3 ,,	7 ,, ½ ,,	6 ,, 9 ,,
2 ,, 13 ,,	4 ,, 3½ ,,	3 ,, ,, 4 ,,	8 ,, 7 ,,	8 ,, 7 ,,
3 ,, 4½ ,,	5 ,, 2½ ,,	4 ,, ,, 5½ ,,	9 ,, 13½ ,,	10 ,, 5 ,,
3 ,, 12 ,,	6 ,, 1½ ,,	5 ,, ,, 7 ,,	11 ,, 4 ,,	12 ,, 3 ,,
4 ,, 3½ ,,	7 ,, ½ ,,	6 ,, ,, 8 ,,	12 ,, 10½ ,,	14 oz. 1 ,,
4 ,, 11 ,,	7 ,, 15½ ,,	7 ,, ,, 10 ,,	14 ,, 1 ,,	15 ,, 15 ,,
5 ,, 2½ ,,	8 ,, 14½ ,,	8 ,, ,, 11 ,,	15 ,, 7½ ,,	1 lb. 1¾ oz.
5 ,, 10 ,,	9 ,, 13½ ,,	9 ,, ,, 12½ ,,	1 lb. ¾ oz.	1 ,, 3¾ ,,
6 ,, 1½ ,,	10 ,, 12½ ,,	10 ,, ,, 14 ,,	1 ,, 2¼ ,,	1 ,, 5½ ,,
8 ,, 7 ,,	15 ,, 7½ ,,	15 ,, ,, 21 ,,	1 ,, 9¼ ,,	1 ,, 15 ,,
10 ,, 12½ ,,	1 ,, 4¼ ,,	20 ,, ,, 28 ,,	2 ,, ¼ ,,	2 ,, 8½ ,,
15 ,, 7½ ,,	1 ,, 13½ ,,	30 ,, ,, 41 ,,	2 ,, 14¼ ,,	3 ,, 11 ,,

TABLE X.

Counter Machines.

(*See* Rule 123.)

Holding capacity (loose material) of balancing box shall not exceed (1 per cent. of capacity).	Verification.	
	Sensitiveness when fully loaded.	Greatest error allowed in excess or deficiency when fully loaded.
2·56 drams. ...	20 grains.	·30 grains.
5·12 „ ...	28 „	1½ drams.
10·24 „ ...	40 „	2 „
1 oz. 1·92 „ ...	2 drams.	3 „
1 oz. 9·6 drams ...	2½ drams.	3½ drams.
2 „ 3·84 „ ...	3 „	4½ „
3 „ 3·2 „ ...	3·3/7 „	5·1/7 „
4 „ 7·68 „ ...	4 „	6 „
6 oz. 6·4 drams. ...	4·6/7 drams.	7·2/7 drams.
8 „ 15·36 „ ...	6 „	9 „
13 „ 7·04 „ ...	7 „	12½ „
17 „ 14·72 „ ...	8 „	16 „

Capacity of Machine.	Inspection.		Minimum amount of "fall" either way.
	Sensitiveness when fully loaded.	Greatest error allowed in excess or deficiency when fully loaded.	
1 lb. or ½ seer.	60 grains.	60 grains.	¼ inch.
2 „ „ 1 „	*3 drams.	3 drams.	¼ „
4 „ „ 2 seers.	†4½ „	4 „	¼ „
7 „ „ 3½ „	6 „	6 „	5/16 „
10 lb. or 5 seers.	7½ drams.	7 drams.	⅜ inch.
14 „ „ 7 „	9 „	9 „	⅜ „
20 „ „ 10 „	10·2/7 „	10·2/7 „	⅜ „
28 „ „ 14 „	12 „	12 „	⅜ „
40 lb. or 20 seers.	14·4/7 drams.	14·4/7 drams.	7/16 inch.
56 „ „ 28 „	18 „	18 „	7/16 „
84 „ „ 41 „	21 „	25 „	½ „
1 cwt. or 55 „	24 „	32 „	½ „

* 3·07188 drams exactly. † 4·3884 drams exactly.

TABLE XI.

Note.—The following tables of allowances for Spring Balances are calculated on the basis laid down in Rule 104.

Spring Balances.

(*See* Rule 123.)

Range of adjustment on adjustable indicator shall not exceed: (1 per cent. of capacity).	Weight corresponding to interval between consecutive graduations must not exceed.	Minimum diameter of effective circle on dial of one revolution allowing a blank space of ¾ inch at end of graduations.
2·56 drams ...	2 drams or ¼ tola.	2·8 inches.
5·12 ,, ...	4 ,, ,, ½ ,,	2·8 ,,
10·24 ,, ...	4 ,, ,, ½ ,,	5·33 ,,
12·8 ,,	4 ,, ,, ½ ,,	6·6 ,,
15·36 ,, ...	4 ,, ,, ½ ,,	7·88 ,,
1 oz. 1·92 drams ...	4 drams or ½ tola	9·15 inches.
1 ,, 9·6 ,,	8 ,, ,, 1 ,,	6·6 ,,
1 ,, 14·72 ,, ...	8 ,, ,, 1 ,,	7·88 ,,
2 ,, 3·84 ,,	8 ,, ,, 1 ,,	9·15 ,,
2 ,, 6·4 ,, ...	8 ,, ,, 1 ,,	9·8 ,,
3 oz. 3·2 drams ...	1 oz. or 2½ tolas.	6·6 inches.
3 ,, 13·44 ,, ...	1 ,, ,, 2½ ,,	7·88 ,,
4 ,, 0·0 ,, ...	1 ,, ,, 2½ ,,	8·2 ,,
4 ,, 7·68 ,, ...	1 ,, ,, 2½ ,,	9·15 ,,
4 ,, 12·8 ,, ...	1 ,, ,, 2½ ,,	9·8 ,,

Capacity.	Verification.	Inspection.
	Maximum error.	Maximum error.
1 lb. or ½ seer ...	30 grains.	60 grains.
2 ,, ,, 1 ,, ...	1½ drams.	3 drams.
4 ,, ,, 2 seers ...	2 ,,	4 ,,
5 ,, ,, 2½ ,, ...	2·1/3 ,,	4·2/3 ,,
6 ,, ,, 3 ,, ...	2·2/3 ,,	5·1/3 ,,
7 lb. or 3½ seers ...	3 drams.	6 drams.
10 ,, ,, 5 ,, ...	3½ ,,	7 ,,
12 ,, ,, 6 ,, ...	4 ,,	8 ,,
14 ,, ,, 7 ,, ..	4½ ,,	9 ,,
15 ,, ,, 7½ ,, ...	4·17/28 ,,	9·3/14 ,,
20 lb. or 10 seers ...	5·1/7 drams.	10·2/7 drams.
24 ,, ,, 12 ,, ...	5·4/7 ,,	11·1/7 ,,
25 ,, ,, 12½ ,, ...	5·19/28 ,,	11·5/14 ,,
28 ,, ,, 14 ,, ...	6 ,,	12 ,,
30 ,, ,, 15 ,, ...	6·3/14 ,,	12·3/7 ,,

In the above the minimum width apart of the graduations shall not be less than 1/16th of an inch.

TABLE XI—*contd.*

Capacity.	Range of adjustment on adjustable indicator shall not exceed : (1 per cent. of the capacity).	Weight corresponding to interval between consecutive graduation *should* not exceed.
40 lb. or 20 seers ...	6·4 oz.	2 oz.
50 „ „ 25 „ ...	8 „	2 „
56 „ „ 28 „ ...	8·96 „	2 „
60 „ „ 30 „ ...	9·6 „	2 „
100 „ „ 49 „ ...	1 lb. 0·0 „	8 „
112 lb. or 55 seers ...	1 lb. 1·92 oz.	8 oz.
120 „ „ 59 „ ...	1 „ 3·2 „	8 „
140 „ „ 68 „ ...	1 „ 6·4 „	8 „
150 „ „ 73 „ ...	1 „ 8 „	8 „
160 „ „ 78 „ ...	1 „ 9·6 „	8 „
200 lb. or 98 seers ...	2 lb. 0·0 oz.	1 lb.
224 „ „ 110 „ ...	2 „ 3·84 „	1 „
250 „ „ 122 „ ...	2 „ 8 „	1 „
280 „ „ 137 „ ...	2 „ 12·8 „	1 „
300 „ „ 146 „ ...	3 „ 0·0 „	1 „
336 lb. or 164 seers ...	3 lb. 5·76 oz.	1 lb.
350 „ „ 171 „ ...	3 „ 8·0 „	1 „
400 „ „ 195 „ ...	4 „ 0·0 „	2 „
448 „ „ 218 „ ...	4 „ 8·0 „	2 „
450 „ „ 219 „ ...	4 „ 7·68 „	2 „
500 lb. or 244 seers ...	5 lb. 0·0 oz.	2 lb.
560 „ „ 273 „ ...	5 „ 9·6 „	2 „
600 „ „ 292 „ ...	6 „ 0·0 „	2 „
800 „ „ 390 „ ...	8 „ 0·0 „	4 „
1,000 „ „ 488 „ ...	10 „ 0·0 „	5 „

In the above minimum width apart of the graduations shall not be less than 1/8 of an inch.

TABLE XI—*concld.*

Capacity.	Minimum diameter of effective circle on dial of one revolution allowing a blank space of ¾ inch at end of graduations.	Verification. Maximum error.	Inspection. Maximum error.
40 lb. or 20 seers ...	12·97 inches	A weight corresponding to a Quarter of the interval between consecutive graduations.	A weight corresponding to a Half of the interval between consecutive graduations.
50 ,, ,, 25 ,, ...	16·16 ,,		
56 ,, ,, 28 ,,	18·07 ,,		
60 ,, ,, 30 ,, ...	19·34 ,,		
100 ,, ,, 49 ,, ...	8·2 ,,		
112 lb. or 55 seers ...	9·15 inches.		
120 ,, ,, 59 ,, ...	9·79 ,,		
140 ,, ,, 68 ,, ...	11·38 ,,		
150 ,, ,, 73 ,, ...	12·18 ,,		
160 ,, ,, 78 ,, ...	12·97 ,,		
200 ,, ,, 98 seers ...	8·2 inches.		
224 ,, ,, 110 ,, ...	9·15 ,,		
250 ,, ,, 122 ,, ...	10·19 ,,		
280 ,, ,, 137 ,, ...	11·38 ,,		
300 ,, ,, 146 ,, ...	12·18 ,,		
336 lb. or 164 seers ...	13·61 inches.		
350 ,, ,, 171 ,, ...	14·17 ,,		
400 ,, ,, 195 ,, ...	8·2 ,,		
448 ,, ,, 218 ,, ...	9·15 ,,		
450 ,, ,, 219 ,, ...	9·2 ,,		
500 lb. or 244 seers ...	10·19 inches.		
560 ,, ,, 273 ,, ...	11·38 ,,		
600 ,, ,, 292 ,, ...	12·18 ,,		
800 ,, ,, 390 ,, ...	8·2 ,,		
1,000 ,, ,, 488 ,, ...	8·2 ,,		

In the above minimum width apart of the graduations shall not be less than 1/8 of an inch.

TABLE XII.

Steel Yards.

(*See* Rule 123.)

Verification.		Capacity.	Inspection.	
Sensitiveness when fully loaded.	Greatest error allowed in excess or deficiency when fully loaded.		Sensitiveness when fully loaded.	Greatest error allowed in excess or deficiency when fully loaded.
12 drs.	18 drs.	56 lb. or 28 seers	2 oz. 4 drs.	2 oz. 4 drs.
14 ,,	25 ,,	84 ,, ,, 41 ,,	2 ,, 10 ,,	3 ,, 2 ,,
1 oz.	2 oz.	112 ,, ,, 55 ,,	3 ,,	4 ,,
1 ,, 3 drs.	2 ,, 6 drs.	150 ,, ,, 73 ,,	3 ,, 9 drs.	4 ,, 12 drs.
1 ,, 6 ,,	2 ,, 12 ,,	200 ,, ,, 98 ,,	4 ,, 2 ,,	5 ,, 4 ,,
1 ,, 10 ,,	3 ,, 4 ,,	250 ,, ,, 122 ,,	4 ,, 14 ,,	6 ,, 8 ,,
2 ,,	4 ,,	300 ,, ,, 146 ,,	6 ,,	8 ,,
2 ,,	4 ,,	350 ,, ,, 171 ,,	6 ,,	8 ,,
2¼ oz.	4½ oz.	400 lb. or 195 seers	6¾ oz.	9 oz.
2½ ,,	5 ,,	450 ,, ,, 219 ,,	7½ ,,	10 ,,
2¾ ,,	5½ ,,	500 ,, ,, 244 ,,	8¼ ,,	11 ,,
3¼ ,,	6½ ,,	600 ,, ,, 292 ,,	9¾ ,,	13 ,,
4 ,,	8 ,,	800 ,, ,, 390 ,,	12 ,,	16 ,,

TABLE XIII.

Dead-weight Machines.

(For this purpose, "Dead-weight" includes contracted or unequal armed Coal machines.)

(*See* Rule 123.)

Loose balancing material in box shall not exceed (¼ per cent. of capacity).	Verification.			
	Vibrating Machines.		Accelerating Machines.	
	Sensitiveness when fully loaded.	Greatest error allowed in excess or deficiency when fully loaded.	Greatest error allowed in excess or deficiency when fully loaded.	Weight required to bring back the steel-yard from position of greatest displacement when fully loaded.
13·44 oz.	½ oz.	1 oz.	1 oz.	2 oz.
1 lb. 10·88 ,,	¾ ,,	1½ ,,	1½ ,,	3 ,,
2 ,, 8·32 ,,	1 ,,	2 ,,	2 ,,	4 ,,
3 ,, 5·76 ,,	1¼ ,,	2½ ,,	2½ ,,	5 ,,
4 ,, 3·2 ,,	1½ ,,	3 ,,	3 ,,	6 ,,
5 lb. 14·08 oz.	2 oz.	4 oz.	4 oz.	8 oz.
8 ,, 6·4 ,,	3 ,,	6 ,,	6 ,,	12 ,,
10 ,, 1·28 ,,	3·2/5 ,,	6·4/5 ,,	6·4/5 ,,	13·3/5 ,,
12 ,, 9·6 ,,	4 ,,	8 ,,	8 ,,	16 ,,
16 lb. 12·8 oz.	5½ oz.	10 oz.	10 oz.	20 oz.
25 ,, 3·2 ,,	6 ,,	13 ,,	13 ,,	26 ,,
33 ,, 9·6 ,,	8 ,,	16 ,,	16 ,,	32 ,,
42 ,,	10 ,,	20 ,,	20 ,,	40 ,,

Capacity of machine.	Inspection.			Minimum. "fall".
	Vibrating Machines.		Accelerating machines.	
	Sensitiveness when fully loaded.	Greatest error allowed in excess or deficiency when fully loaded.	Greatest error allowed in excess or deficiency when fully loaded.	
1 cwt. or 1½ mds.	1½ oz.	2 oz.	2 oz.	Vib. M/cs. ¼ in. both ways. Accel. M/cs.—⅛ in. one way.
2 ,, ,, 3 ,,	2¼ ,,	3 ,,	3 ,,	
3 ,, ,, 4 ,,	3 ,,	4 ,,	4 ,,	
4 ,, ,, 6 ,,	3¾ ,,	5 ,,	5 ,,	
5 ,, ,, 7 ,,	4½ ,,	6 ,,	6 ,,	
7 cwt. or 10 mds.	6 ,,	8 oz.	8 oz.	
10 ,, ,, 14 ,,	9 ,,	12 ,,	12 ,,	
12 ,, ,, 17 ,,	10·1/5 ,,	13·3/5 ,,	13·3/5 ,,	
15 ,, ,, 21 ,,	12 ,,	16 ,,	16 ,,	
20 cwt. or 28 mds.	15 oz.	20 oz.	20 oz.	
30 ,, ,, 41 ,,	19½	26 ,,	26 ,,	
40 ,, ,, 55 ,,	24 ,,	32 ,,	32 ,,	
50 ,, ,, 69 ,,	30 ,,	40 ,,	40 ,,	

TABLE XIV.

Platform Machines.

(*See* Rule 123.)

Verifications.

Minimum travel of steel-yard in career.	Range of Balancing Arrangement.					
	Maximum ½ per cent. of capacity.		Minimum ¼ per cent. of capacity.		⅛ per cent. "each way".	
	to the nearest ¼ ounce.					
	lb.	oz.	lb.	oz.	lb.	oz.
Vib. M/es.—⅜ in. both ways. Accel. M/es.—⅝ in. one way.		9		4½		2¼
	1	2		9		4½
	1	11		13½		6¾
	2	4	1	2		9
	2	13	1	6½		11¼
	3	15	1	15½		15¾
	5	9½	2	12¾	1	6½
	6	11¼	3	5¾	1	11
	8	6½	4	3¼	2	1½
	11	3¾	5	9½	2	12¾
	16	12¾	8	6½	4	3¼
	22	6½	11	3¼	5	9½
	28		14		7	

Capacity of Machine.	Vibrating Machines.		Accelerating Machines.		Platform machines fitted with Dials.
	Sensitiveness when fully loaded.	Greatest error allowed in excess or deficiency when fully loaded.	Greatest error allowed in excess or deficiency when fully loaded.	Weight required to bring back the steel-yard from position of greatest displacement when fully loaded.	Greatest error allowed in excess or deficiency when fully loaded.
1 cwt. or 1½ mds. ..	½ oz.	1 oz.	1 oz.	2 oz.	2 oz.
2 ,, ,, 3 ,, ..	¾ ,,	1½ ,,	1½ ,,	3 ,,	3 ,,
3 ,, ,, 4 ,, ..	1 ,,	2 ,,	2 ,,	4 ,,	4 ,,
4 ,, ,, 6 ,, ..	1¼ ,,	2½ ,,	2½ ,,	5 ,,	5 ,,
5 ,, ,, 7 ,, ..	1½ ,,	3 ,,	3 ,,	6 ,,	6 ,,
7 cwt. or 10 mds. ..	2 oz.	4 oz.	4 oz.	8 oz.	8 oz.
10 ,, ,, 14 ,, ..	3 ,,	6 ,,	6 ,,	12 ,,	12 ,,
12 ,, ,, 17 ,, ..	3·2/5 ,,	6·4/5 ,,	6·4/5 ,,	13·3/5 ,,	13·3/5 ,,
15 ,, ,, 21 ,, ..	4 ,,	8 ,,	8 ,,	16 ,,	16 ,,
20 ,, ,, 28 ,, ..	5 ,,	10 ,,	10 ,,	20 ,,	20 ,,
30 cwt. or 41 mds. ..	6½ oz.	13 oz.	13 oz.	26 oz.	26 oz.
40 ,, ,, 55 ,, ..	8 ,,	16 ,,	16 ,,	32 ,,	32 ,,
50 ,, ,, 69 ,, ..	10 ,,	20 ,,	20 ,,	40 ,,	40 ,,

Inspection.

Capacity of Machine.	Vibrating Machines.		Accelerating Machines.	Platform machines fitted with Dials.
	Sensitiveness when fully loaded.	Greatest error allowed in excess or deficiency when fully loaded.	Greatest error allowed in excess or deficiency when fully loaded.	Greatest error allowed in excess or deficiency when fully loaded.
1 cwt. or 1½ mds. ..	1½ oz.	2 oz.	2 oz.	4 oz.
2 ,, ,, 3 ,, ..	2¼ ,,	3 ,,	3 ,,	6 ,,
3 ,, ,, 4 ,, ..	3 ,,	4 ,,	4 ,,	8 ,,
4 ,, ,, 6 ,, ..	3¾ ,,	5 ,,	5 ,,	10 ,,
5 ,, ,, 7 ,, ..	4½ ,,	6 ,,	6 ,,	12 ,,
7 cwt. or 10 mds. ..	6 oz.	8 oz.	8 oz.	16 oz.
10 ,, ,, 14 ,, ..	9 ,,	12 ,,	12 ,,	24 ,,
12 ,, ,, 17 ,, ..	10·1/5 ,,	13·3/5 ,,	13·3/5 ,,	27·1/5 ,,
15 ,, ,, 21 ,, ..	12 ,,	16 ,,	16 ,,	32 ,,
20 ,, ,, 28 ,, ..	15 ,,	20 ,,	20 ,,	40 ,,
30 cwt. or 41 mds. ..	19½ oz.	26 oz.	26 oz.	52 oz.
40 ,, ,, 55 ,, ..	24 ,,	32 ,,	32 ,,	64 ,,
50 ,, ,, 69 ,, ..	30 ,,	40 ,,	40 ,,	80 ,,

TABLE XV.

WEIGH-BRIDGES.

(*See* Rule 123.)

Verification.

Minimum travel of steel-yard in career.	Range of Balancing arrangement.		
	Maximum ½ per cent. of capacity.	Minimum ¼ per cent. of capacity.	⅛ per cent. each way.
Accel. M/cs.—¾ in. one way. Vib. M/cs.—½ in. both ways.	11·2 lb. 22·4 ,, 56 ,, 1 cwt. 2 ,, 2½ ,, 3 ,, 3½ ,, 4 ,, 5 ,, 7½ ,, 10 ,, 20 ,,	5·6 lb. 11·2 ,, 28 ,, 56 ,, 1 cwt. 1¼ ,, 1½ ,, 1¾ ,, 2 ,, 2½ ,, 3¾ ,, 5 ,, 10 ,,	2·8 lb. 5·6 ,, 14 ,, 28 ,, 56 lb. 70 ,, 84 ,, 98 ,, 1 cwt. 1¼ ,, 210 lb. 2½ cwt. 5 ,,

Continued below.

Capacity of Machine.	Vibrating Machines.		Accelerating Machines.		Weigh-bridges fitted with Dials.
	Sensitiveness when fully loaded.	Greatest error allowed in excess or deficiency when fully loaded.	Greatest error allowed in excess or deficiency when fully loaded.	Weight required to bring back the steel-yards from position of greatest displacement when fully loaded.	Greatest error allowed in excess or deficiency when fully loaded.
1 ton or 28 mds. ...	1½ lb.	1½ lb.	1½ lb.	4 lb.	3 lb.
2 tons ,, 55 ,, ...	2 ,,	2 ,,	2 ,,	5 ,,	4 ,,
5 ,, ,, 138 ,, ...	3½ ,,	4 ,,	4 ,,	10 ,,	8 ,,
10 ,, ,, 275 ,, ...	5 ,,	6 ,,	6 ,,	15 ,,	12 ,,
20 tons or 550 mds. ...	7 lb.	10 lb.	10 lb.	25 lb.	20 lb.
25 ,, ,, 688 ,, ...	8 ,,	12 ,,	12 ,,	30 ,,	24 ,,
30 ,, ,, 825 ,, ...	8½ ,,	13½ ,,	13½ ,,	34 ,,	27 ,,
35 ,, ,, 963 ,, ...	9 ,,	15 ,,	15 ,,	37 ,,	30 ,,
40 tons or 1,100 mds. ...	9½ lb.	16 lb.	16 lb.	40 lb.	32 lb.
50 ,, ,, 1,375 ,, ...	10 ,,	18 ,,	18 ,,	45 ,,	36 ,,
75 ,, ,, 2,063 ,, ...	12 ,,	23 ,,	23 ,,	58 ,,	46 ,,
100 ,, ,, 2,750 ,, ...	14 ,,	28 ,,	28 ,,	70 ,,	56 ,,
200 ,, ,, 5,500 ,, ...	18 ,,	42 ,,	42 ,,	105 ,,	84 ,,

Inspection.

Capacity of Machine.	Vibrating Machines.		Accelerating Machines.	Weigh-bridges fitted with Dials.
	Sensitiveness when fully loaded.	Greatest error allowed in excess or deficiency when fully loaded.	Greatest error allowed in excess or deficiency when fully loaded.	Greatest error allowed in excess or deficiency when fully loaded.
1 ton. or 28 mds. ..	4½ lb.	3 lb.	3 lb.	6 lb.
2 ,, ,, 55 ,, ..	6 ,,	4 ,,	4 ,,	8 ,,
5 ,, ,, 138 ,, ..	10½ ,,	8 ,,	8 ,,	16 ,,
10 ,, ,, 275 ,, ..	15 ,,	12 ,,	12 ,,	24 ,,
20 ,, ,, 550 ,,	21 ,,	20 ,,	20 ,,	40 ,,
25 ,, ,, 688 ,, ..	24 ,,	24 ,,	24 ,,	48 ,,
30 ,, ,, 825 ,, ..	25½ ,,	27 ,,	27 ,,	54 ,,
35 ,, ,, 963 ,, ..	27 ,,	30 ,,	30 ,,	60 ,,
40 ,, ,, 1,100 ,, ..	28½ ,,	32 ,,	32 ,,	64 ,,
50 ,, ,, ,375 ,, ..	30 ,,	36 ,,	36 ,,	72 ,,
75 ,, ,, 2,063 ,, ..	36 ,,	46 ,,	46 ,,	92 ,,
100 ,, ,, 2,750 ,, ..	42 ,,	56 ,,	56 ,,	112 ,,
200 ,, ,, 5,500 ,, ..	54 ,,	84 ,,	84 ,,	168 ,,

TABLE XVI.

CRANE MACHINES.

(*See* Rule 123.)

Range of balancing arrangement shall not exceed (2 per cent. of capacity).	Verification.			
	Lever Machines (Vibrating).		Crane Machines fitted with dials.	Hydraulic Crane Machines.
	Sensitiveness when fully loaded.	Greatest error allowed in excess or deficiency when fully loaded.	Greatest error allowed in excess or deficiency when fully loaded.	Greatest error allowed in excess or deficiency when fully loaded.
2·24 lb.	½ oz.	1 oz.	2 oz.	
11·2 ,, ...	1½ ,,	3 ,,	6 ,,	
22·4 ,, ...	3 ,,	6 ,,	12 ,,	
44·8 ,, ...	1½ ,,	1½ lb.	3 lb.	
89·6 ,, ...	2 ,,	2 ,,	4 ,,	
2 cwts.	3½ lb.	4 lb.	8 lb.	One HALF the weight represented by the interval between consecutive graduation marks.
4 ,, ...	5 ,,	6 ,,	12 ,,	
8 ,, ...	7 ,,	10 ,,	20 ,,	
10 ,, ...	8 ,,	12 ,,	24 ,,	
12 ,, ...	8½ ,,	13½ ,,	27 ,,	
14 cwts.	9 lb.	15 lb.	30 lb.	
16 ,, ...	9½ ,,	16 ,,	32 ,,	
20 ,, ...	10 ,,	18 ,,	36 ,,	
30 ,, ...	12 ,,	23 ,,	46 ,,	
40 ,, ...	14 ,,	28 ,,	56 ,,	
80 ,, ...	18 ,,	42 ,,	84 ,,	

TABLE XVI—*contd.*

Capacity of Machine.	Inspection.			
	Lever Machines (Vibrating).		Crane Machines fitted with dials.	Hydraulic Crane Machines.
	Sensitiveness when fully loaded.	Greatest error allowed in excess or deficiency when fully loaded.	Greatest error allowed in excess or deficiency when fully loaded.	Greatest error allowed in excess or deficiency when fully loaded.
1 cwt. or 1½ mds. ...	1½ oz.	2 oz.	4 oz.	
5 ,, ,, 7 ,, ...	4½ ,,	6 ,,	12 ,,	
10 ,, ,, 14 ,, ...	9 ,,	12 ,,	1½ lb.	
1 ton ,, 28 ,, ...	4½ lb.	3 lb.	6 ,,	
2 tons ,, 55 ,, ...	6 ,,	4 ,,	8 ,,	
5 tons or 138 mds. ...	10½ lb.	8 lb.	16 lb.	A weight represented by the interval between consecutive graduation marks.
10 ,, ,, 275 ,, ...	15 ,,	12 ,,	24 ,,	
20 ,, ,, 550 ,, ...	21 ,,	20 ,,	40 ,,	
25 ,, ,, 688 ,, ...	24 ,,	24 ,,	48 ,,	
30 ,, ,, 825 ,, ...	25½ ,,	27 ,,	54 ,,	
35 tons or 963 mds. ...	27 lb.	30 lb.	60 lb.	
40 ,, ,, 1,100 ,, ...	28½ ,,	32 ,,	64 ,,	
50 ,, ,, 1,375 ,, ...	30 ,,	36 ,,	72 ,,	
75 ,, ,, 2,063 ,, ...	36 ,,	46 ,,	92 ,,	
100 ,, ,, 2,750 ,, ...	42 ,,	56 ,,	112 ,,	
200 ,, ,, 5,500 ...	54 ,,	84 ,,	168 ,,	

TABLE XVII.

AUTOMATIC MACHINES.

(*See* Rule 123.)

Use.	Capacity.	Error.	
Weighing small loads of tea, coffee, etc.	1 oz. or 1/32 seer and upwards.	½ per cent. of the load, in excess only.	
Weighing grain, etc. ...	10 lb. or 5 seers and upwards.	¼ per cent. of the load, in excess or deficiency.	The allowances in these cases are subject to the proviso that the error tolerated shall not exceed the weight represented by half a minimum division, marked on the dial or steelyard.
Weighing coal, etc. ...	100 lb. or 50 seers and upwards.	½ per cent. of the load, in excess or deficiency.	
"Totalising" machines used for weighing coal, etc.	10 cwt. or 14 maunds and upwards.	½ per cent. of the total load of 40 weighings, in excess or deficiency.	

TABLE XVIII.

PERIODS OF ALLOWANCE.

(*See* Rule 63.)

6 months (*a*).	2 years (*b*).	5 years (*c*).
Manufacturers' and dealers' stocks of weights and measures and weighing instruments.	All the following in use for trade weights and measures and weighing instruments other than those mentioned in column (*c*).	(1) Steelyards. (*a*) Reversible and with 3 hooks. (*b*) Acclerating. (*c*) Counter steelyards. (*d*) Without zero graduation. (*e*) Less than 56 lbs. capacity.

TABLE XIX.

Permissible Abbreviations of Denominations.

(*See* Rule 66.)

(*a*) *Weights* (*Seers and Maunds*)—

Maunds	Md.
Seer	Sr.
Tola	To.
Grain	gr.

(*b*) *Weights* (*Avoirdupois*)—

Hundred-weight	cwt.
Pound	lb.
Ounce	oz.
Dram	dr.
Grain	gr.

(*c*) *Dry Measures of Capacity*—

Seer	Dr. Sr.
Chatak	Chk.
Adapao	Adp.
Adholi	Ali.
Payali	Pal.
Maund	Dr. Md.

Liquid Measures of Capacity—

Fluid Seer	Fl. Sr.
Fluid Ounce	Fl. oz.
Fluid Dram	Fl. dr.

(*d*) *Measures of Length*—

Yard	Yd.
Foot	ft.
Inch	in.

(*e*) *Bullion and Rati Weights*—

Bullion Tola	Bl. To.
Rati	Rt.
Val	Vl

(*f*) *Apothecaries Weights*—

Ounce	Oz. Apth.
4 drachms	ʒiv.
2 drachms	ʒij.
1 drachm	ʒi.
2 scruples	℈ij.
1½ scruples or ½ drachm	ʒfs.
1 scruple	℈i.
½ scruple	℈fs.

(*g*) *Apothecaries Measures*—

Fluid Ounces	Fl. oz.
Fluid Drachm	Fl. dr.
Minim	Mn.

TABLE XX.

AMOUNT OF ERROR PERMISSIBLE IN SECONDARY AND WORKING STANDARDS.

Denomination.	Amount of error tolerated in excess. Half the amount tolerated in deficiency.
(1) Above 1 maund ..	8 grains
,, ½ ,, and not exceeding 1 maund ..	6 ,,
,, ¼ ,, ,, ,, ½ ,, ..	4 ,,
,, ⅛ ,, ,, ,, ¼ ,, ..	3 ,,
,, 1/16 ,, ,, ,, ⅛ ,, ..	2 ,,
,, 1 seer ,, ,, 2 seers ..	2 ,,
,, ½ ,, ,, ,, 1 seer ..	1 grain.
,, ¼ ,, ,, ,, ½ ,, ..	0·5 ,,
,, ⅛ ,, ,, ,, ¼ ,, ..	0·3 ,,
,, 1/16 ,, ,, ,, ⅛ ,, ..	0·2 ,,
,, 1/32 ,, ,, ,, 1/16 ,, ..	0·1 ,,
,, 8 tolas ..	0·4 ,,
,, 5 ,, ,, ,, 8 tolas ..	0·2 ,,
,, 2 ,, ,, ,, 5 ,, ..	0·1 ,,
,, 1 tola ,, ,, 2 ,, ..	0·05 ,,
,, ½ ,, ,, ,, 1 tola ..	0·02 ,,
,, ¼ ,, ,, ,, ½ ,, ..	0·01 ,,
,, ⅛ ,, ,, ,, ¼ ,, ..	0·005 ,,
,, 1/16 ,, ,, ,, ⅛ ,, ..	0·003 ,,
,, 1/12 ,, ,, ,, 1/16 ,, ..	0·001 ,,
(1) (*a*) Bullion Tola Weights—	
Above 500 Tolas	3 grains.
,, 200 ,, and not exceeding 500 Tolas ..	2 ,,
,, 100 ,, ,, ,, 200 ,, ..	2 ,,
,, 50 ,, ,, ,, 100 ,, ..	1 grain.
,, 20 ,, ,, ,, 50 ,, ..	·5 ,,
,, 10 ,, ,, ,, 20 ,, ..	·3 ,,
,, 5 ,, ,, ,, 10 ,, ..	·2 ,,
,, 2 ,, ,, ,, 5 ,, ..	·1 ,,
,, 1 Tola ,, ,, 2 ,, ..	·05 ,,
,, ½ ,, ,, ,, 1 Tola ..	·02 ,,
,, ¼ ,, ,, ,, ½ ,, ..	·01 ,,
,, ⅛ ,, ,, ,, ¼ ,, ..	·005 ,,
,, 1/16 ,, ,, ,, ⅛ ,, ..	·003 ,,
,, 1/32 ,, ,, ,, 1/16 ,, ..	·002 ,,
Not exceeding 1/32 tola	·001 ,,

TABLE XX—*contd.*

Denomination.	Amount of error tolerated in excess. / Half the amount tolerated in deficiency.
(1) (*b*) Rati Weights—	
Above 72 Ratis	·05 grain.
,, 48 ,, and not exceeding 72 Ratis ..	·02 ,,
,, 24 ,, ,, ,, 48 ,, ..	·01 ,,
,, 12 ,, ,, ,, 24 ,, ..	·005 ,,
,, 6 ,, ,, ,, 12 ,, ..	·003 ,,
,, 2 ,, ,, ,, 6 ,, ..	·002 ,,
Not exceeding 2 Ratis	·001 ,,
(2) *Avoirdupois Weights*—	
Above 56 lbs.	5 grains
,, 28 ,, and not exceeding 56 lbs. ..	4 ,,
,, 14 ,, ,, ,, 28 ,, ..	3 ,,
,, 2 ,, ,, ,, 14 ,, ..	2 ,,
,, 1 ,, ,, ,, 2 ,, ..	1 grain.
,, 8 oz. ,, ,, 1 lb. ..	0·5 ,,
,, 2 ,, ,, ,, 8 oz. ..	0·2 ,,
,, 8 drams ,, ,, 2 ,, ..	0·1 ,,
,, 1 dram ,, ,, 8 drams ..	0·05 ,,
,, ½ ,, ,, ,, 1 dram ..	0·02 ,,
(2) (*a*) Grain Weights—	
Above 1,000 grains	0·2 grain.
,, 240 ,, and not exceeding 1,000 grains.	0·1 ,,
,, 40 ,, ,, ,, 240 ,, ...	0·05 ,,
,, 5 ,, ,, ,, 40 ,, ...	0·02 ,,
,, 3 ,, ,, ,, 5 ,, ...	0·01 ,,
,, 1 grains ,, ,, 3 ,, ...	0·005 ,,
,, 0·3 ,, ,, ,, 1 grain.	0·003 ,,
,, 0·05 ,, ,, ,, 0·3 ,, ...	0·001 ,,
Not exceeding 0·05 grain	0·0003 ,,
(2) (*b*) Apothecaries Weights—	
Above 2 oz.	0·2 grain.
,, 4 drachm and not exceeding 2 oz. ...	0·1 ,,
,, 2 scruples ,, ,, 4 drachm. ...	0·05 ,,
,, 5 grains ,, ,, 2 scruples ...	0·02 ,,
,, 3 ,, ,, ,, 5 grains ...	0·01 ,,
,, 1 grain ,, ,, 3 ,, ...	0·005 ,,
Not exceeding 1 grain	0·003 ,,

TABLE XX—*contd.*

Denomination.	Amount of error tolerated in excess or in deficiency. Grains weight of water as measured by a graduated glass tube.
(3) *Dry Measures*—	
Above 2 maunds ...	770 grains.
,, 1 maund and not exceeding 2 maunds ...	520 ,,
,, ½ ,, ,, ,, 1 maund ...	260 ,,
,, ¼ ,, ,, ,, ½ ,, ...	130 ,,
,, ⅛ ,, ,, ,, ¼ ,, ...	65 ,,
,, 1/16 ,, ,, ,, ⅛ ,, ...	32 ,,
,, 2 seers ,, ,, 4 seers ...	28 ,,
,, 1 seer ,, ,, 2 ,, ...	14 ,,
,, ½ ,, ,, ,, 1 seer ...	12 ,,
,, ¼ ,, ,, ,, ½ ,, ...	8 ,,
,, ⅛ ,, ,, ,, ¼ ,, ...	6 ,,
,, 1/16 ,, ,, ,, ⅛ ,, ...	4 ,,
,, 1/32 ,, ,, ,, 1/16 ,, ...	3 ,,
Not exceeding 1/32 seer	2 ,,
(4) *Liquid Measures*—	
Above 8 seers ...	100 grains.
,, 4 ,, and not exceeding 8 seers ...	55 ,,
,, 2 ,, ,, ,, 4 ,, ...	28 ,,
,, 1 seer ,, ,, 2 ,, ...	14 ,,
,, ½ ,, ,, ,, 1 seer ...	12 ,,
,, ¼ ,, ,, ,, ½ ,, ...	8 ,,
,, ⅛ ,, ,, ,, ¼ ,, ...	6 ,,
,, 1/16 ,, ,, ,, ⅛ ,, ...	4 ,,
,, 1/32 ,, ,, ,, 1/16 ,, ...	3 ,,
Not exceeding 1/32 seer ...	2 ,,
(5) *Liquid Measures* (gallons)—	
Above 24 gallons ...	1024 grains.
,, 16 ,, and not exceeding 24 gallons ...	768 ,,
,, 8 ,, ,, ,, 16 ,, ...	512 ,,
,, 6 ,, ,, ,, 8 ,, ...	256 ,,
,, 4 ,, ,, ,, 6 ,, ...	192 ,,
,, 2 ,, ,, ,, 4 ,, ...	128 ,,
,, gallon and not exceeding 2 ,, ...	64 ,,
,, Half gallon not exceeding gallon ...	32 ,,
,, Quart and not exceeding Half gallon ...	16 ,,
,, Pint and not exceeding Quart ...	12 ,,
,, Gill and not exceeding Pint ...	8 ,,
Not exceeding Gill ...	4 ,,

TABLE XX—*concld.*

Denomination.	Amount of error tolerated in excess. / Half the amount tolerated in deficiency.
(5) (*a*) Apothecaries Measures—	
Above 20 fl. oz.	12 grains.
,, 5 ,, ,, and not exceeding 20 fl. oz. ...	8 ,,
,, 4 ,, ,, ,, ,, 5 ,, ,, ...	6 ,,
,, 2 ,, ,, ,, ,, 4 ,, ,, ...	4 ,,
,, 2 fl. drachm ,, 2 ,, ,, ...	3 ,,
,, 60 minims or 1 fl. drachm and not exceeding 2 fl. drachm.	2 ,,
,, 30 minims and not exceeding 60 minims or 1 fl. drachm.	1 grain.
Not exceeding 30 minims	·5 ,,
(5) (*b*) Liquor Measures—	
Above 1 dram	8 grains.
Not exceeding 1 dram	4 ,,
Peg and ½ Peg	3 ,,

Denomination.	Amount of error tolerated in excess or in deficiency. / Grains weight of water as measured by a graduated glass tube.
(6) *Length*—	
Above 10 feet	0·1 inch.
Above 3 feet and not exceeding 10 feet ...	0·02 ,,
Above 1 inch and not exceeding 3 feet ...	0·01 ,,
Not exceeding 1 inch	0·001 ,,

TABLE XX-A.

Amount of error to be tolerated in selling grey, white or coloured cotton piecegoods.

(*See* Rule 123-A.)

1. Where sale is effected on the basis of a single length stamped on the cloth—

Described length of the piece.	Actual length must not be less than the described length by more than the following margins.
Ten yards and under	4 inches.
Above 10 and up to 23 yards	5 ,,
Above 23 and up to 36 yards	7 ,,
Above 36 and up to 47 yards	9 ,,
Above 47 yards	18 ,,

Provided that when more than one piece is sold to the same person at a time the average length of the goods in question shall not be less than that purported to be sold.

2. Where sale is effected of cloth (on which maximum and minimum length are stamped) on the basis of described maximum length—

Described length of piece (maximum).	Actual length must not be less than the scribed maximum length by more than the following margins.
Thirty-five yards and under	9 inches.
Above 35 yards and up to 47 yards	18 ,,
Above 47 yards	36 ,,

Provided that sale of one piece only at a time shall not be effected on the basis of minimum stamped length if it is more than the actual length.

Provided further that when more than one piece is sold to the same person at a time on the basis of stamped maximum length or stamped minimum length or both, the average length of the goods in question supplied to the purchaser shall not be less than that purported to be sold.

3. Where sale is effected on the basis of stamped width—

Width of the piece.	Actual width must not be less than the described width by more than the following margins.
40″ and under	½ inch.
Over 40″ and under 59″	¾ ,,
59″ and over	1 ,,

Provided that when more than one piece is sold to the same person at a time the average width of goods sold shall not be less than the stamped width.

TABLE XXI.

Charges to be Levied for Verifying and Stamping Weights and Measures of the Public.

(*See* Rule 124).

Weights.

Capacity.	Charge.	
Tola Weights.		
Val and Rati weights each	Anna	1
1/32 tola each	Annas	3
1/16 ,, ,, ...	,,	3
1/8 ,, ,, ...	,,	3
1/4 ,, ,, ...	,,	3
1/2 ,, ,, ...	,,	3
1 ,, ,, ...	,,	3
2 tolas each	,,	3
3 ,, ,, ...	,,	3
4 ,, ,, ...	,,	3
5 ,, ,, ...	,,	3
8 ,, ,, ...	,,	3
10 ,, ,, ...	,,	3
20 ,, ,, ...	,,	3
30 ,, ,, ...	,,	3
50 ,, ,, ...	,,	3
100 ,, ,, and above	,,	9
Seer and Maund Weights.		
1/32 seer weights each	Annas	2
1/16 ,, ,, ,, ...	,,	2
1/8 ,, ,, ,, ...	,,	2
1/4 ,, ,, ,, ...	,,	2
1/2 ,, ,, ,, ...	,,	2
1 ,, ,, ,, ...	,,	7
2 seers weights each	,,	7
4 ,, ,, ,, ...	,,	7
8 ,, ,, ,, ...	,,	7
* * * *		
1/32 maund weights each	Annas	7
1/16 ,, ,, ,, ...	,,	7
1/8 ,, ,, ,, ...	,,	7
1/4 ,, ,, ,, ...	,,	7
1/2 ,, ,, ,, ...	,,	7
1 ,, ,, ,, ...	,,	7

TABLE XXI—*contd.*

Capacity.		Charge.	
WEIGHTS—*contd.*			
Avoirdupois Weights.			
Grain weights each	... ...	Anna	1
1/8 dram weights each	... ...	,,	1
1/4 ,, ,, ,,	... ...	,,	1
1/2 ,, ,, ,,	... ...	,,	1
1 ,, ,, ,,	... ...	,,	1
1/8 ounce weights each	... ...	Annas	2
1/4 ,, ,, ,,	... ...	,,	2
1/2 ,, ,, ,,	... ...	,,	2
1 ,, ,, ,,	... ...	,,	2
2 ,, ,, ,,	... ...	,,	2
4 ,, ,, ,,	... ...	,,	2
8 ,, ,, ,,	... ...	,,	2
1 lb. weights each	... ...	,,	2
2 lbs. weights each	... ...	,,	7
4 ,, ,, ,,	... ...	,,	7
7 ,, ,, ,,	... ...	,,	7
14 ,, ,, ,,	... ...	,,	7
28 ,, ,, ,,	... ...	,,	7
56 ,, ,, ,,	... ...	,,	7
Apothecaries' Weights.			
1/2 scruple weights each	... ...	Anna	1
1 ,, ,, ,,	... ...	,,	1
2 ,, ,, ,,	... ...	,,	1
1/16 ounce (Apoth.) weights each	... ...	Annas	3
1/8 ,, ,, ,, ,,	... ...	,,	3
1/4 ,, ,, ,, ,,	... ...	,,	3
1/2 ,, ,, ,, ,,	... ...	,,	3
1 ,, ,, ,, ,,	... ...	,,	3
2 ,, ,, ,, ,,	... ...	,,	3
4 ,, ,, ,, ,,	... ...	,,	3
6 ,, ,, ,, ,,	... ...	,,	3
8 ,, ,, ,, ,,	... ...	,,	3
10 ,, ,, ,, ,,	... ...	,,	3
DRY MEASURES.			
1/32 seer measures each	... ...	Annas	2
1/16 ,, ,, ,,	... ...	,,	2
1/8 ,, ,, ,,	... ...	,,	2
1/4 ,, ,, ,,	... ...	,,	2
1/2 ,, ,, ,,	... ...	,,	2
1 ,, ,, ,,	... ...	,,	2
2 seers measures each	... ...	,,	7
4 ,, ,, ,,	... ...	,,	7
8 ,, ,, ,,	... ...	,,	7
		,,	9

TABLE XXI—*contd.*

Capacity.	Charge.	
Dry Measures—*contd.*		
1/8 maund measures each	Annas	9
1/4 ,, ,, ,, ...	,,	9
1/2 ,, ,, ,, ...	,,	9
3/4 ,, ,, ,, ...	,,	9
1 ,, ,, ,, ...	,,	9
Liquid Measures.		
Seer Measures.		
1/64 seer measures each	Annas	2
1/32 ,, ,, ,, ...	,,	2
1/16 ,, ,, ,, ...	,,	2
1/8 ,, ,, ,, ...	,,	2
1/4 ,, ,, ,, ...	,,	2
1/2 ,, ,, ,, ...	,,	2
1 ,, ,, ,, ...	,,	7
2 seers measures each	,,	7
4 ,, ,, ,, ...	,,	7
8 ,, ,, ,, ...	,,	9
10 ,, ,, ,, ...	,,	9
20 ,, ,, ,, ...	,,	9
30 ,, ,, ,, ...	,,	9
40 ,, ,, ,, ...	,,	9
Liquor Measures.		
1/4 liquor dram measures each	Anna	1
1/2 ,, ,, ,, ,, ...	,,	1
1 ,, ,, ,, ,, ...	Annas	3
2 ,, ,, ,, ,, ...	,,	3
4 ,, ,, ,, ,, ...	,,	3
8 ,, ,, ,, ,, ...	,,	3
Peg measures each	,,	3
Apothecaries' Measures.		
1 Minim to and including 30 minims	Anna	1
Above 1/2 fluid drachm and including 4 fluid drachms	,,	1
Above 1/2 fluid oz. and including 40 fluid oz. ...	Annas	3
Gallon Measures.		
Pint measures each	Annas	3
Each measure not exceeding ½ gallon	,,	3
Each measure above ½ gallon and not exceeding 8 gallons	,,	9

TABLE XXI—*concld.*

Capacity.	Charge.	
LIQUID MEASURES—*contd.*		
Gallon Measures—contd.		
Each measure above 8 gallons and not exceeding 25 gallons	Rupee	1
When the capacity exceeds 25 gallons then each additional 25 gallons or part thereof	,,	1
MEASURES OF LENGTH.		
Each measure below 3 feet	Annas	2
Each measure of 3 feet or a yard and not exceeding 25 feet	,,	7
Each measure above 25 feet	Rupee	1
AREA AND VOLUME.		
1/8 Brass measure each	Annas	3
1/4 ,, ,, ,, ...	,,	3
1/2 ,, ,, ,, ...	,,	3
1 ,, ,, ,, ...	,,	9

TABLE XXII.

FEES FOR VERIFYING AND STAMPING WEIGHING INSTRUMENTS.

(*See* Rule 125.)

Weighing Instruments other than Beam Scales of Class C and D.

Capacity—	Rs.	a.	p.
Above 25 tons and not exceeding 50 tons	40	0	0
When the capacity exceeds 50 tons, then each additional 25 tons or part of 25 tons	10	0	0
Above 10 tons and not exceeding 25 tons.	30	0	0
Above 5 tons and not exceeding 10 tons	20	0	0
Above 1 ton and not exceeding 5 tons	15	0	0
Above 5 cwt. and not exceeding 1 ton	7	8	0
Above 1 cwt. and not exceeding 5 cwt.	5	0	0
Above 56 lbs. and not exceeding 1 cwt.	3	0	0
Above 14 lbs. and not exceeding 56 lbs.	2	0	0
Above 1 lb. and not exceeding 14 lbs.	1	8	0
Not exceeding 1 lb.	1	0	0

Charges for weighing instruments with graduations marked for seer and maund weights will be on the basis of the above fees, one ton for this purpose being taken as equivalent to 28 maunds.

Note 1.—Where a weighing instrument has 2 sets of graduations, one marked for seers and maunds and the other for lbs. and cwts., two separate fees are payable.

Note 2.—Where 2 weigh tables or platforms are connected to one steel-yard or office mechanism, two separate fees in accordance with the capacity of the respective weigh tables or platforms are payable.

TABLE XXII—*contd.*

Beam Scales of Classes C and D.

Capacity.	Charge. Rs.	a.	p.
Above 1 ton	15	0	0
Above 5 cwt. and not exceeding 1 ton	6	0	0
Above 1 cwt. and not exceeding 5 cwt.	4	0	0
Above 56 lbs. and not exceeding 1 cwt.	2	4	0
Above 14 lbs. and not exceeding 56 lbs.	1	8	0
Above 1 lb. and not exceeding 14 lbs.	1	0	0
Not exceeding 1 lb.	0	12	0

TABLE XXII-A.

FEES FOR VERIFYING AND STAMPING MEASURING INSTRUMENTS.

(*See* Rule 125.)

Measuring Instruments (*Petrol Pumps*).

Capacity—	Rs.	a.	p.
(*i*) not exceeding 5 gallons	5	0	0
(*ii*) exceeding 5 gallons but not exceeding 10 gallons	7	8	0
(*iii*) exceeding 10 gallons but not exceeding 20 gallons	15	0	0
(*iv*) exceeding 20 gallons	15	0	0 *plus* Rs. 5 for each additional 10 gallons or part thereof, over 20 gallons.

TABLE XXIII.

FEES TO BE CHARGED FOR VERIFICATION AND STAMPING OF WORKING AND SECONDARY STANDARDS.

(*See* Rule 133.)

	Rs.	a.	p.
For verifying and stamping a complete set of secondary standards *plus* actual freight, cartage and delivery charges from the station of despatch to Bombay and back ...	300	0	0
For verifying and stamping one complete set of working standards together with actual transport and cartage charges both ways	100	0	0

G. N., G. D., No. 2924/33, dated 31st May 1940 (B. G., Pt. IV-B, p. 609). S. 46

In exercise of the powers conferred by section 46 of the Bombay Weights and Measures Act, 1932 (Bom. XV of 1932), the Government of Bombay is pleased to exempt the classes of weights or measures or weighing or measuring instruments specified in the first column of the schedule hereto, when used or intended to be used for purposes other than trade specified in the corresponding entry in the second column thereof, from the provisions of the sections specified in the third column thereof :—

Schedule.

Weights or measures or weighing or measuring instruments to be exempted.	Purposes other than trade for which weights, etc., specified in column 1 when used or intended to be used would be exempted.	Sections from the provisions of which weights, etc., specified in column 1 would be exempted.
1	2	3
1. Weights, measures, weighing and measuring instruments.	(1) For purposes other than trade when used by the following classes of persons or at the following places: 1. Educational or Research Institutions. 2. Research Laboratories. 3. *Bona fide* students of educational institutions. (2) For weighing or measuring in hospitals and convalescent homes. (3) For ascertaining weights and measurements of persons, provided no fees are charged for it.	Section 4 so far as it does not relate to the establishment of standards of weights; section 13 and section 16 subject to the conditions that— (*a*) the weight or measure or weighing or measuring instrument is clearly, indelibly and prominently marked "Not for trade" and/or (2) the weight has no loading hole and in case of weights of capacity below 2 tolas or 1 ounce, a cross extending to the sides of the weight is indelibly marked on the top surface of the weight.
2. Weights and weighing instruments.	(1) For estimating the postage or freight payable on letters and parcels, for personal information only. (2) For the purpose of weighing various ingredients to be mixed in match, rubber and fireworks factories.	Section 4 so far as it does not relate to the establishment of standards of weights; section 13 and section 16 subject to the conditions that— (*a*) the weight or measure or weighing or measuring instrument is clearly, indelibly and prominently marked "Not for trade" and/or (2) the weight has no loading hole and in case of weights of capacity below 2 tolas or 1 ounce, a cross extending to the sides of the weight is indelibly marked on the top suface of the weight.
3. Weights, measures, scales, calibrated bowls, menes mixers, calibrated teaspoons and such other cooking utensils.	For rough weighments or measurements in households for personal use only.	Do. do.
4. Knowel's patent yarn balance and similar other balances.	For testing the counts of yarn ...	Do. do.
5. Weighing instruments used and kept in Cotton Pressing Factories.	For the purposes of estimating approximate weight of loose cotton to be pressed into each bale provided no charge is levied on the basis of such estimated weights.	Do. do.

s. 46 **G. N., G. D., No. 2924/33, dated 10th July 1941 (B. G., Pt. IV-B, p. 619).**

In exercise of the powers conferred by section 46 of the Bombay Weights and Measures Act, 1932 (Bom. XV of 1932), the Government of Bombay is pleased to exempt the class of measures specified in the first column of the schedule hereto, when used or intended to be used for purposes other than trade specified in the corresponding entry in the second column thereof, from the provisions of the sections specified in the third column thereof :—

Schedule.

Measures or measuring instruments to be exempted. 1	Purposes other than trade for which measures specified in column 1 when used or intended to be used would be exempted. 2	Sections from the provisions of which measures specified in column 1 would be exempted. 3
Tape measures in use in Finishing and Calendering Departments in textile mills.	For the purpose of checking width of cloth coming out from finishing and calendering machines to ascertain whether the width after these processes tallies with the predetermined width or not.	Section 4 so far as it does not relate to the establishment of standards of weights; section 13 and section 16 subject to the condition that the measures are clearly, indelibly and prominently marked "Not for trade".

s. 46 **G. N., G. D., No. 2924/33, dated 6th January 1943 (B. G., Pt. IV-B, p. 4).**

In exercise of the powers conferred by section 46 of the Bombay Weights and Measures Act, 1932 (Bom. XV of 1932), the Government of Bombay is pleased to exempt the weighing instruments specified in the first column of the schedule hereto, when used or intended to be used for purposes other than trade specified in the crresponding entry in the second column thereof, from the provisions of the sections specified in the third column thereof :—

Schedule.

Weights or measures or weighing or measuring instruments to be exempted. 1	Purposes other than trade for which weights, etc., specified in column 1 when used or intended to be used would be exempted. 2	Sections from the provisions of which weighing instruments specified in column 1 would be exempted. 3
1. Weighing Instruments.	Used for mixing ingredients for personal information only in the— (1) Sizemixing, bleaching, printing, finishing and calendering departments of Textile Mills and Factories. (2) Manufacturing concerns and Railway Workshops.	Section 4 so far as it does not relate to the establishment of standards of weights; section 13 and section 16 subject to the condition that the weighing instruments are clearly, indelibly and prominently marked "Not for trade".
2. Weighing Instruments.	For ascertaining the predetermined weights of laps in blow rooms of Textile Mills and Factories.	Do. do.

THE BOMBAY VILLAGE PANCHAYATS ACT, 1933
(BOM. VI OF 1933).

G. N., G. D., No. S. 174/8, dated 7th June 1940 (B. G., Pt. IV-B, p. 627). **S. 108 (1) (a)**

Amended by G. N., H. & L. G. D., No. S. 174/8, dated 23rd June 1949.

In exercise of the powers conferred by clause (*a*) of sub-section (*1*) of section 108 of the Bombay Village Panchayats Act, 1933 (Bom. VI of 1933), (hereinafter referred to as "the Act") the Government of Bombay is pleased to make the following rules, namely :—

1. Whenever it is proposed to declare any local area to be a village under sub-section (*1*) of section 4 of the Act, the Collector shall make an enquiry to ascertain the population and the extent of such local area and whether such local area comprises a revenue village or a group of revenue villages or hamlets forming part of a revenue village.

2. (*i*) If the local area comprises a revenue village having a population of not less than 1,000, or

(*ii*) If the local area comprises a revenue village having a population of less than 1,000 and at least 50 adult residents thereof apply in writing for the establishment of a panchayat, the Collector shall submit to Government a statemnt in Form A hereto annexed.

3. In the case of a local area comprising a group of revenue villages or hamlets forming part of a revenue village, the Collector shall first ascertain (i) whether the majority of the residents of each of the villages or hamlets agrees to the said villages or hamlets being grouped together for being declared a village, or (ii) whether village panchayats have already been established in such villages or hamlets or groups thereof and are working satisfactorily. If the Collector is satisfied that (i) such majority agrees to the establishment of a panchayat for such group of villages or hamlets, or (ii) that panchayats have been established in such villages or hamlets and are working satisfactorily, he shall submit to Government a statement in Form B hereto annexed.

FORM A.

(*See* rule 2.)

Name of the revenue village.	Taluka.	District.
1	2	3

Extent of the revenue village.	Population of the revenue village.	Remarks of the Collector.
4	5	6

Collector.

FORM B.

(*See* rule 3.)

Names of the villages and/or hamlets comprised in the local area.	Taluka.	District.
1	2	3

The extent of the local area and where the local area consists of parts of revenue villages and hamlets the Survey Nos. to be mentioned.	The population of the local area.	Remarks of the Collector.
4	5	6

Collector.

s. 108 (1) (a), (b), (d), (e), (m), (n), (o) & (p).

G. N., G. D., No. S. 174/1, dated 18th December 1934 (B. G., Pt. I-A, p. 487).

Amended by G. N., G. D., No. S. 174 (1), dated 15th September 1936.
Amended by G. N., G. D., No. S. 174 (1) (b), dated 1st April 1936.
Amended by G. N., G. D., No. 2103/33, dated 14th April 1938.
Amended by G. N., G. D., No. S. 174/1 (b), dated 13th October 1942.
Amended by G. N., G. D., No. S. 174 (1), dated 28th January 1943.
Amended by G. N., G. D., No. S. 174/1, dated 9th February 1943.
Amended by G. N., G. D., No. S. 174/1, dated 23rd February 1943.
Amended by G. N., G. D., No. S. 174/1, dated 10th January 1944.
Amended by G. N., G. D., No. S. 174/1, dated 24th February 1944.
Amended by G. N., H. & L. G. D., No. S. 174/1, dated 30th August 1948.

In exercise of the powers conferred by clauses (*a*), (*b*), (*d*), (*e*), (*m*), (*n*), (*o*) and (*p*) of sub-section (*1*) of section 108 of the Bombay Village Panchayats Act, 1933 (Bom. VI of 1933), the Government of Bombay is pleased to make the following rules, namely :—

Rules under clause (a) of sub-section (1) of section 108 of the Bombay Village Panchayats Act, 1933, regulating the manner in which the Commissioner may hold an inquiry under section 4.

1. (1) On receipt of an application under section 4, the Commissioner shall cause a written notice thereof to be published inviting objections from the residents of the local area concerned to be submitted to him within thirty days from the date of publication of such notice, to the proposed declaration.

(2) Such notice shall be published by affixing a copy thereof at—

(*a*) the office of the Taluka Local Board, if any, having authority over the local area,

(*b*) the office of the Mamlatdar or Mahalkari having jurisdiction over the local area, and

(*c*) the Chavdi, village panchayat office, if any, or such other public place within the local area as the Commissioner may direct.

The publication of the notice at the Chavdi or at any other public place may be announced by beat of drum or by the village crier in the village.

(3) Copies of the notice shall be sent to the Collector and the President of the district local board.

2. (1) On receipt of an application under clause (*iii*) of section 4 to declare a local area to be a village, the Commissioner shall send the application to the Collector for a report as to the genuineness of the application and whether all the signatories to the application are adults and residents of the local area.

(2) Along with the report called for under sub-rule (*1*) the Collector shall send a plan or map of the local area proposed to be declared a village, and shall also report the extent of the local area, its population, and the local fund cess levied therein, and, if there be a holder of a revenue village in such area, whether such holder has any objection to a declaration being made including such revenue village in such area.

3. The Commissioner after considering the objections, if any, received in consequence of the notice published under rule 1 and the report of the Collector made under rule 2, and after making such further inquiry as he may consider necessary,

shall, subject to the declaration, if any, to be made by the State Government under the proviso to section 4, decide whether the application should be granted or refused. The Commissioner shall, if the application is granted, make a declaration by notification in the *Bombay Government Gazette* under section 4. If the application is refused, the Commissioner shall communicate his refusal to the applicants.

Rules under clause (b) of sub-section (1) of section 108 of the Bombay Village Panchayats Act, 1933, regulating the manner in which the Collector shall nominate the holder or his representative under section 6.

1. (1) The Collector shall, by notice in writing, call upon the holder or the principal holder of a revenue village, as the case may be, if he is not disqualified under section 8, to state within fifteen days of such notice whether he is able and willing to serve and if he is unable or unwilling to serve, to appoint a representative. If the holder or the principal holder, as the case may be, is able to serve and expresses his willingness to serve, the Collector shall nominate him. If the holder or the principal holder, as the case may be, appoints a representative, and such representative is not disqualified under section 8, and if the Collector approves him, the Collector shall nominate such representative. If the representative is disqualified under section 8, or if the Collector does not approve him for any other reason, the Collector shall, by notice in writing, give the holder or the principal holder, as the case may be, a further opportunity of appointing a representative who is not disqualified under section 8, and who is approved by the Collector within eight days of such notice, and if the holder or principal holder, as the case may be, appoints a representative who is not disqualified under section 8 and who is approved by the Collector, the Collector shall nominate such representative.

(2) For the purposes of determining the principal holder of a revenue village the Collector shall take into consideration the value of the share of each of the holders of the village. If such village is managed by one of the sharers on behalf of all the sharers, the manager shall be deemed to be the principal holder.

2. (1) If the sole holder is unable or unwilling to serve and fails to appoint a representative, in the manner prescribed in rule 1, the Collector shall nominate any fit person, who is not disqualified under section 8, to be the representative of such holder.

(2) If the principal holder is unable or unwilling to serve and fails to appoint a representative, in the manner provided in rule 1, the Collector shall nominate any one of the remaining holders who is not disqualified under section 8 and whom he considers fit or in the absence of any such holders any other person who is not disqualified under section 8 and whom he considers fit.

Rules under clause (d) of sub-section (1) of section 108 of the Bombay Village Panchayats Act, 1933, regulating the manner in which notice of a vacancy in the office of a sarpanch, deputy sarpanch or members of a panchayat shall be given under section 23.

1. The notice of a vacancy in the office of a sarpanch, deputy sarpanch or member shall be given to the Collector, within seven days of such vacancy, by the sarpanch, in the absence of the sarpanch by the deputy sarpanch, and in the absence of both the sarpanch and the deputy sarpanch by the Secretary. If the vacancy is in the office of a sarpanch a copy of the notice shall be sent to the President of the district local board.

2. The notice shall state the cause of the vacancy; and in case the vacancy is due to a cause other than death or resignation, the notice shall state the circumstances causing the vacancy.

Rules under clause (e) of sub-section (1) of section 108 of the Bombay Village Panchayats Act, 1933, prescribing the custody in which all funds received by and all sums accruing to a panchayat shall be kept under section 32.

1. (1) A panchayat may allow its secretary to keep a permanent advance not exceeding Rs. 50 for meeting current expenditure.

(2) At the end of each month, the sarpanch, or in his absence the deputy sarpanch, shall check the secretary's permanent advance account and verify the balance.

2. (1) A panchayat may—

(*i*) deposit with such bank as may be approved by the Collector all funds other than the sum allowed to be kept with its secretary under sub-rule (*1*) of rule 1, or

(*ii*) invest such funds in public securities as defined in clause (*18*) of section 3 of the Bombay District Municipal Act, 1901, in the name of the panchayat, and, from time to time, dispose of such securities as may be necessary.

(2) All such funds shall, unless deposited or invested under sub-rule (*1*), be deposited in the Taluka Sub-Treasury in the first week of every month, if such funds do not exceed Rs. 100, and as soon as conveniently may be if such funds exceed Rs. 100.

Rules under clause (m) of sub-section (1) of section 108 prescribing under section 89 (2) the rate and the manner in which taxes and fees specified in that section shall be leviable.

A—D. [*Deleted.*]

E. RULES FOR THE LEVY OF A TAX ON THE SALE OF GOODS UNDER SECTION 89 (*2*) (*iv*).

1. Every person exposing commodities for sale within the limits of a market or fair held within the limits of the village shall pay a tax as hereinafter provided.

2. Each panchayat shall determine the rate to be charged not exceeding the rates fixed by the State Government under clause (*n*) of section 108 (1) either according to the size of the plot allowed to be occupied or on the quantity of goods to be exposed for sale and obtain thereto the sanction of the Commissioner.

3. The tax shall be payable on demand at the site to the person authorised by the panchayat in this behalf who shall pass a receipt in the form prescribed under the rules.

F and G.—[*Deleted.*]

Rule under section 108 (1), sub-clause (n), prescribing under section 90, the maximum rate for the levy of taxes or fees specified in section 89.

The rates of taxes and fees leviable under section 89 shall not exceed those mentioned below :—

	Maximum rate.
1. Tax upon the owners or occupiers of lands and houses—	
(*a*) for tax based on capital value of the lands and buildings.	Re. 0-8-0 per Rs. 100 of the capital value or fraction thereof.
(*b*) for tax based on letting value of the lands and buildings.	15 per cent. on the annual letting value.
2. Pilgrim Tax ...	6 annas from every pilgrim.
3. Tax on Fairs and Festivals ...	(*a*) 4 annas for the period of the fair or festival for every plot

Maximum rate.

measuring not more than 9 square feet occupied for the purpose of a shop or booth or stall, and 6 pies for every additional plot of 9 square feet or part thereof.

(*b*) Rs. 50 per acre per day for spaces taken up for cinemas, circuses or other amusements.

4. Tax on the sales of goods ... (*a*) If the panchayat decides that the tax shall be payable on the area of the plot occupied the rate shall be the same as in 3 (*a*), but for each day.

(*b*) If the panchayat decides that the tax shall be payable by a rate on the quantity of articles exposed for sale the maximum rate shall be as follows per day :—

(1) *Vegetables or fruits*—

	Rs.	a.	p.
(*a*) Basket ..	0	0	6
(*b*) Gunny bag..	0	1	0
(*c*) Cart ..	0	4	0

(2) *Grain*—

(*a*) Head load ..	0	0	6
(*b*) Gunny bag..	0	2	0
(*c*) Cart ..	0	4	0

(3) *Other articles*—

(*a*) Head load ..	0	0	6
(*b*) Gunny bag..	0	2	0
(*c*) Cart load ..	0	4	0

5. *Octroi*—

		Rs.	a.	p.	
(i) Cloth—					
(*a*) Cotton	... ...	1	0	0	per Bengal maund.
(*b*) Woollen	... ...	1	8	0	per Bengal maund.
(*c*) Silk	... ...	3	0	0	per Bengal maund.
(ii) Kerosene	... ...	0	2	0	per tin.

	Maximum rate. Rs. a. p.	
(iii) Building materials—		
(*a*) Timber	0 8 0	per every cart load (i.e., 16 Bengal maunds).
(*b*) Corrugated iron sheets ...	0 4 0	per Bengal maund.
(iv) Other articles	0 4 0	per Bengal maund.

6. Tax on Marriages, adoptions and feasts—

	Rs. a. p.
A. *Marriages*—	
Class I	... 5 0 0
Class II	... 2 0 0
Class III	... 1 0 0
Class IV	... 0 8 0
B. *Adoptions*—	
Class I	... 5 0 0
Class II	... 2 0 0
Class III	... 1 0 0
Class IV	... 0 8 0
C. *Feasts*—	
Class I	... 3 0 0
Class II	.. 2 0 0
Class III	... 1 0 0
Class IV	... 0 8 0

7. General Sanitary cess ... Annas 4 per annum per hundred rupees of the capital valuation of the house where the valuation does not exceed Rs. 1,500 or annas 4 per annum per Rs. 3 of the annual letting value of the house where the value does not exceed Rs. 45, and

Rs. 4 per annum where the capital valuation of the house exceeds Rs. 1,500 or Rs. 4 per annum where the annual letting value of the house exceeds Rs. 45.

Provided that in the Bombay Suburban District such cess may be levied at a rate not exceeding 2½ per cent. annum of the annual letting value of the house, where such value exceeds Rs. 160.

8. Special sanitary cess—

(*a*) *Bombay Suburban District* .. Rs. 24 per annum per privy, latrine or family using a privy or latrine and Rs. 12 for each additional privy or latrine used by the same family.

(*b*) *Elsewhere* ... ... Rs. 12 per annum per privy, latrine or family using a privy or latrine and Rs. 6 for each additional privy or latrine used by the same family.

9. Fee on markets or weekly bazars... Two annas per day or Rs. 3 per month for every plot measuring not more than 9 square feet and one anna per day or Rs. 1-8-0 per month for every additional plot of 9 square feet or part thereof.

10. Toll on vehicles and animals—

Vehicles.

	Rs.	a.	p.
(*a*) On every vehicle drawn by two or more animals (e.g. carriage, tonga, eka.)	0	2	0
(*b*) On every such vehicle drawn by one animal	0	1	0
(*c*) On every bicycle	0	1	0

Animals.

(*d*) On every elephant	0	4	0
(*e*) On every camel	0	2	0
(*f*) On every buffalo, horse, mare, gelding pony, mule, bullock cow, heifer.	0	1	0
(*g*) On every colt, filly, calf, ass, sheep, goat, dog, pig	0	0	6

Rules under clause (o) of sub-section (1) of section 108 of the Bombay Village Panchayats Act, 1933, prescribing the remuneration of village officers for the recovery of taxes and other sums due to a panchayat and the manner in which the remuneration shall be paid under section 91 (5) of the Act.

1. The remuneration payable to village officers for the recovery of taxes and other sums due to a panchayat shall be one anna per rupee recovered and shall be distributed as follows :—

	Pies.	
(i) Talati (or Kulkarni) ...	5	Out of every anna recovered as remuneration from the village panchayat (*vide* Government Resolution, Revenue Department, No. 7485/24 of 11th February 1929.)
(ii) Patil ...	4	
(iii) Inferior Village Servant.	3	

2. In the case of panchayats which have deposited their funds in the sub-treasury under sub-rule (2) of rule 2 of the rules under claus (*e*) of sub-section (*1*) of section 108 read with section 32 the remuneration to the village officers and servants for the recovery of the panchayat dues shall be paid as soon as practicable after the close of the financial year, by a cheque drawn on the sub-treasury by the sarpanch and counter-signed by the Mamlatdar or the Mahalkari as the case may be. Any difference between the village officers and the Sarpanch should be settled by reference to the Assistant or Deputy Collector, whose decision shall be final.

3. In the case of panchayats which have deposited their funds in any Bank approved by the Collector under rule 2 of the rules under clause (*e*) of sub-section (*1*) of section 108 read with section 32 the village officers may recover the remuneration by preferring a bill to the sarpanch, any difference between the village officers and the sarpanch being settled by reference to the Assistant or Deputy Collector, whose decision shall be final.

4. The Talati (or Kulkarni) shall be responsible for distributing the remuneration in accordance with rule 1.

Rules under clause (p) of sub-section (1) of section 108 of the Bombay Village Panchayats Act, 1933, prescribing the terms on which loans may be granted to a panchayat by the district local board under section 93.

1. No application made by a panchayat for a loan shall be entertained by a district local board unless such application is made for any of the purposes of the Act and is supported by a resolution passed by a two-thirds majority of the whole number of members of the panchayat.

2. A district local board may, on an application made by a panchayat in accordance with rule 1, grant to the panchayat a loan not exeeding the sanctioned estimate of the item on which the amount is required to be spent by the panchayat, on the security of the funds of the panchayat.

3. No loan exceeding in amount five times the excess of the average current revenue over the average current expenditure based on the last three years' figures, shall be granted by a district local board to a panchayat.

4. The rate of interest payable by a panchayat on a loan granted by a district local board shall be settled by mutual agreement between the district local board and the panchayat :

Provided that such rate of interest shall not exceed the rate at which loans are from time to time granted by the State Government under the Land Improvement Loans Act, 1883.

5. A loan granted by a district local board to a panchayat shall be repayable with interest in not more than ten equated payments.

S. 108 (1) (c) and (q) Bombay Village Panchayats Election Rules, 1943.

G. N., H. & L. G. D., No. S. 174/3-C, dated 2nd June 1948 (B. G., Pt. IV-B, p. 312).

Amended by G. N., H. & L. G. D., No. S. 174/3(a), dated 18th October 1948.
Amended by G. N., H. & L. G. D., No. S. 174/3(c), dated 2nd June 1949.
Amended by G. N., H. & L. G. D., No. S. 174/3, dated 19th July 1949.
Amended by G. N., H. & L. G. D., No. S. 174/3, dated 13th January 1950.

In exercise of the powers conferred by clauses (*c*) and (*q*) of sub-section (*1*) of section 108 of the Bombay Village Panchayats Act, 1933 (Bom. VI of 1933), and in supersession of the Bombay Village Panchayats Election Rules published in

Government Notification, General Department, No. S. 174/3, dated the 6th June 1940, the Government of Bombay is pleased to make the following rules, namely :—

1. *Short title.*—These rules may be called the Bombay Village Panchayats Election Rules, 1948.

2. *Definition.*—In these rules, unless there is anything repugnant in the subject or context,—

(1) "Act" means the Bombay Village Panchayats Act, 1933 ;

(2) "Election" means an election held to elect a member to a panchayat ;

(3) "Presiding officer" means any person appointed by the Mamlatdar or Mahalkari under rule 7 to be a presiding officer ;

(4) "Reserved seat" means a seat reserved for the representatives of women, Muslims, Harijans or backward tribes, by rules made in this behalf under clause (*b*) of sub-section (*1*) of section 108 ;

(5) "Returning Officer" means any person appointed by the Mamlatdar or Mahalkari under rule 7 to be a returning officer ;

(6) "Section" means a section of the Act ;

(7) "Special officer" means an officer appointed by the State Government under sub-section (*3*) of section 95 to exercise the powers of a Collector under sub-section (*3*) of section 7 ;

(8) "Village chavdi" includes a place deemed to be a chavdi under the Bombay Land Revenue Code, 1879 ;

(9) "Voter" means a person entitled under sub-section (*2*) of section 7 to vote at an election ;

(10) Words and expression not defined in these rules shall have the meanings respectively assigned to them in the Act.

3. *Preparation of Voters' lists.*—(1) Not less than three months before the date fixed for a general election, the Collector shall cause a voters' list to be prepared in the regional language of the village by an officer appointed by him in this behalf.

(2) When a village is divided into wards for the election of members, the voters' list shall be divided into as many sections as there are wards, and the names of each voter shall be entered in the section pertaining to the ward in which he ordinarily resides or, if he does not reside in any ward, in the section pertaining to the ward in which the house or land in respect of which he is qualified to vote is stiuate :

Provided that, when a voter would be entitled under this rule to have his name entered in two or more sections, he shall, within seven days of receipt of a notice in this behalf from the officer who prepares the list, elect in which section his name should be entered.

(3) The voters' list shall, as soon as may be after it is prepared, be published by affixing copies thereof at the village chavdi or at the village panchayat office or at such other public place as may be appointed in that behalf by the officer

who has prepared the list under sub-rule (1). Such list shall be published along with a notice in the regional language of the village stating that any person whose name is not entered in the list and who claims that his name should be entered therein, or any person whose name is entered in the list and who thinks that his own name or that of some other person has been wrongly entered therein or that the name of any person has been wrongly omitted therefrom, may apply in writing within fourteen days from the date of the publication of such notice to the special officer or, if no such officer is appointed, to the Collector for the amendment of such list.

4. *Amendment of Voters' list.*—(1) The special officer or the Collector, as the case may be, shall decide the applications for amendment of the voters' list made under sub-rule (3) of rule 3 and the voters' list shall be revised in accordance with his decisions.

(2) The voters' list so revised shall be published again not less than two months before the date of the election, by the officer who prepared the list under rule 4, by affixing copies thereof at the village chavdi or at the village panchayat office or at such other public place as may be appointed in that behalf by the said officer.

5. *Who are entitled to vote.*—Every person who possesses the qualifications specified in sub-section (2) of section 7 and whose name is entered in the voters' list shall be entitled to vote.

6. *Qualifications of candidates for the reserved seats.*—When any seat is reserved for women or for any community, class or tribe, only women or persons belonging to such community, class or tribe, as the case may be, shall be qualified to be chosen to fill such seat.

7. *Appointment of election staff.*—For every election the Mamlatdar or Mahalkari shall appoint a Returning Officer to hold the election and a Presiding Officer for each place fixed for the recording of votes, hereinafter referred to as the polling station. He may also appoint one or more polling officers to assist the Returning and Presiding officers in the election work.

8. *Fixing of stages of election.*—(1) The Mamlatdar or Mahalkari shall fix the date, hours and place or places for the following stages of an election, namely (i) the nomination of candidates and the scrutiny of nominations, (ii) the recording of votes and (iii) the counting of votes :

Provided that—

(*i*) the Mamlatdar or Mahalkari shall allow an interval of at least twenty-five days between the date fixed for the nomination of candidates and the date fixed for the recording of votes ; and

(*ii*) the interval between the date fixed for the nomination of candidates and the date fixed for the scrutiny of nominations shall not exceed three days.

(2) Written notice of such election including the names or official designations of the persons appointed under rule 7 as Returning and Presiding Officers, shall be given and published in the regional language of the village, not less than forty-five clear days before the date fixed for the election. Copies of the notice shall be affixed at the Village chavdi or at the Village Panchayat office or at any other public place appointed by the Mamlatdar or Mahalkari in this behalf.

(3) On the day immediately preceding the day fixed for recording votes, the returning officer shall cause notice to be given in the village by beat of drum inviting all voters to be present on such day during the hours and at the polling stations fixed for recording votes.

9. *Nomination of candidates.*—On or before the day prescribed for the nomination of candidates, every person who desires to seek election shall make an application in writing in the prescribed form (form C) to the returning officer signifying his willingness to serve as a member of the panchayat and stating the community, class or tribe to which he belongs.

When an election is held at or about the same time for two or more wards in the village, one and the same person may stand for election in all or any number of such wards.

10. *Scrutiny of nominations.*—(1) At the time and place fixed for the scrutiny of nominations, intending candidates and one other person duly authorised in writing by each such intending candidate shall alone be entitled to be present. The returning officer shall allow such persons reasonable facilities for examining the applications of intending candidates.

(2) The returning officer shall, after examining the applications and hearing any objections which may be made before him to any application, either reject or accept the applications according as the candidates are or are not disqualified under section 8. He shall record his decision on each application and, if the application is rejected, shall also record brief reasons for the rejection. He shall inform every intending candidate of his decision.

11. *Withdrawal of candidature.*—Any candidate may withdraw his candidature by notice in writing subscribed by him and delivered to the returning officer within forty-eight hours of the completion of scrutiny under rule 10. A candidate who has withdrawn his candidature shall not be allowed to cancel the withdrawal. Any notice of withdrawal which is given after the expiry of the period prescribed in this rule shall not have any effect.

12. *Appeal against rejection of nominations.*—An appeal against a decision of the returning officer rejecting an application under sub-rule (2) of rule 10 may be made to the Collector or to any other officer appointed by the State Government in this behalf within three days of such decision. The Collector or such other officer, as the case may be, shall decide the appeal not later than the eighteenth day before the day appointed for the recording of votes. The Collector shall forthwith communicate his decision to the returning officer.

13. *Preparation of list of candidates.*—The returning officer shall prepare under his signature a list of all validly nominated candidates on receipt of a communication from the Collector under rule 12 and on the expiry of the period for withdrawal of candidature provided in rule 11 and post it or cause it to be posted up at the village chavdi or the village panchayat office at least fifteen days before the date fixed for the election.

14. *Uncontested elections and failure to elect.*—(1) In any ward in which no seat is reserved for women or a community, class or tribe and, subject to the provisions of sub-rules (2), (3) and (4) below, in any other ward, if the number of validly

nominated candidates is equal to the number of seats to be filled, the candidate or candidates so nominated shall be declared by the returning officer elected without any votes being taken.

(2) In any ward in which a seat is, or seats are, reserved for women or for a community, class or tribe, if the number of validly nominated candidates qualified to be chosen to fill such seats is equal to the number of such seats, the candidates so qualified shall be declared by the returning officer to be elected to fill the reserved seat or seats and votes shall be taken, if necessary, only for filling any seat or seats not filled under this sub-rule.

(3) In any such ward, if the number of validly nominated candidates qualified to be chosen to fill a seat or seats so reserved is less than the number of seats so reserved, all those candidates, if any, shall be declared by the returning officer to be elected to fill the seats so reserved and it shall be deemed that there has been a failure to elect in respect of the remaining reserved seat or seats. Votes shall be taken, if necessary, only for filling seats not so reserved.

(4) In any such ward, if there is no validly nominated candidate qualified to be chosen to fill a seat or seats so reserved, it shall be deemed that there has been a failure to elect in respect of such seat or seats. Votes shall be taken, if necessary, only for filling seats not so reserved.

(5) Subject to the provisions of the above sub-rules, if the number of validly nominated candidates is less than the number of seats to be filled in any ward, the returning officer shall declare all such candidates, if any, to be elected to fill as many of those seats as possible.

15. *Contested elections.*—In cases other than those covered by rule 14, votes shall be taken by ballot for filling the vacancies.

16. In the case of every contested election the Returning Officer shall assign to each candidate a distinguishing symbol.

17. *Form of voting paper.*—(1) The voting paper shall be printed in Form A appended to these rules and shall contain all the candidates' names in alphabetical order, together with the distinguishing symbol assigned to each candidate by the returning officer :

Provided that the names of candidates declared by the returning officer to be elected under rule 14 shall not be entered in the voting paper.

18. *Specimen voting paper.*—Specimen voting papers shall be posted outside the polling station for the guidance of voters at least forty-eight hours before the polling commences.

19. *Election material and ballot boxes.*—(1) On the morning of the polling day, the presiding officers shall each be provided with a ballot box or boxes provided with an aperture for receipt of voting papers, a copy of the sections of the voters' list pertaining to their polling stations, a bound book or books of voting papers serially numbered in foil and counterfoils at the rate of one voting paper for each voter in the voters' list and such other materials for the purposes of the polling as may be necessary.

(2) Before the commencement of the poll, the presiding officer shall show the ballot box empty to such candidates or their agents as may be present at the polling stations and shall then lock it up and seal it in such manner as to prevent its being opened without breaking the seal.

20. *Candidates and agents not to communicate with voters.*—(1) The candidates and their agents shall not speak to or address any voter in the ante-room, but may address to the pesiding officer objections to a voter on any one of the following three grounds, namely :—

(i) that the voter's name does not appear in the voters' list as entitled to vote in the ward in respect of which the election is being held ;

(ii) that his claim to be a certain voter, whose name is entered in the voters' list, is false ;

(iii) that he has already voted at the election.

(2) Any person contravening the provisions of sub-rule (1) of this rule may be expelled from the ante-room by the presiding officer, and a person so expelled shall not be readmitted during the election.

21. *Voters to attend polling stations.*—Every voter desirous of recording his vote shall attend for the purpose at the polling station for the ward for which he is entered in the voters' list on such date and between such hours as may be appointed by the Mamlatdar or Mahalkari in this behalf under rule 8.

22. *Recording of votes.*—Votes shall be recorded in accordance with the following provisions, namely :—

(i) every voter shall be entitled to give as many votes as there are seats for filling which votes are to be taken in his ward, but no voter shall give more than one vote to any one candidate ;

(ii) there shall be no voting by proxy ;

(iii) before a voting paper is delivered to an intending voter his name and his number in the voters' list shall be called out so that all present can hear them ;

(iv) the presiding officer shall dispose of any objections raised by candidates and their agents, and when satisfied that the intending voter is entitled to vote and has not yet voted, shall initial the foil of a voting paper, and after taking the voter's signature or mark on the counterfoil, and endorsing the paper across the junction of foil and counterfoil with a seal, give the foil to the voter and admit him to the polling room ;

(v) the voter shall mark a cross (×) in column 4 of the voting paper against the name of each candidate to whom he intends to give a vote; he shall then fold up the marked paper so as to conceal the marking and shall put the paper so folded into the ballot box and without undue delay leave the polling room ;

(vi) the presiding officer shall give such assistance as may be required to a voter who is by reason of infirmity unable to vote in the manner prescribed ;

(vii) no voting paper shall be issued after the closing hour appointed for the election under rule 8 but any voter who has been given his voting paper before the said closing hour shall be allowed to record his vote.

23. *Duties of presiding and other polling officers.*—It shall be the duty of the presiding officers and their assistants to see that votes are recorded with absolute secrecy; that only such persons as may be admitted to the polling booth under these rules are admitted thereto; and that persons who have recorded their votes, or against whom objections have been heard and upheld, leave immediately. It shall also be their duty to see that these rules and any special directions given by the returning officer thereunder are strictly observed in all respects.

24. *Returning Officer to supervise conduct of election.*—The election shall be conducted under the general supervision of the returning officer. The presiding officer of any polling station may refer any doubtful point to the returning officer if present at the polling station.

25. *Voting by officers on duty at polling stations.*—A presiding or polling officer or any person who is on duty at a polling station at which he is not entitled to vote may, if such officer or person is entitled to vote at the election in connection with which he is employed, record his vote at that polling station. The name of the polling station at which he would otherwise have been entitled to vote shall be entered on the counterfoil of the voting paper in lieu of his number in the voters' list. The voting papers of such persons shall be enclosed in sealed packets on which the names of the polling stations to which they pertain shall be inscribed and such packets shall be delivered to the returning officer with the other articles mentioned in rule 27.

26. *Tendered voting papers.*—If a person representing himself to be a particular voter entered in the voters' list applies for a voting paper after another person has voted as such voter, the applicant shall, after duly answering such questions as the presiding officer may ask, be entitled to vote. The voter shall however, write or, if he is illiterate, the presiding officer shall write for him on the reverse of the voting paper, the names of the candidates for whom he desires to vote and the voter shall tender the voting paper to the presiding officer who shall endorse thereon the name of the voter and his number in the voters' list and shall enclose the voting paper in a separate packet. Such voting papers shall not be counted by the Returning Officer and shall be termed "Tendered Voting Papers". A list shall be maintained of the voting papers so tendered in Form B appended to these rules.

27. *Sealing of ballot boxes, etc.*—(1) The presiding officer shall, as soon as practicable after the close of the poll, in the presence of any candidate or representative of a candidate, if in attendance, seal up the aperture of the ballot boxes and make up into separate packets, endorsing on each a description of its contents, and seal with his own seal and the seal of any candidate or representative who may desire to affix his seal :—

(i) each ballot box in use at the polling station, unopened but with the key attached;

(ii) the books of unused voting papers;

(iii) the tendered voting papers;

(iv) the marked copies of the voters' lists;

(v) the books of counterfoils of the used voted papers; and

(vi) the tendered vote list.

(2) The packets shall be forwarded by the presiding officer to the returning officer or any other person appointed by the returning officer to take charge of them till the votes are counted and till the books of counterfoils and used foils

are destroyed under rule 33. He shall also forward with them a statement showing the number of voting papers entrusted to him and accounting for them under the heads of voting papers used, voting papers tendered, and voting papers unused.

28. *Counting of votes.*—(1) On the day and at the time appointed under rule 8 for the counting of votes the returning officer shall open the ballot boxes one at a time and the votes shall be counted in the presence of such of the candidates and their election agents as may be present.

(2) Clearly valid papers shall be separated from invalid and doubtful papers. Every ballot paper on which the voter has recorded more votes than he is entitled to give or has recorded more than one vote for any one candidate or which is unmarked shall be invalid. The returning officer may also reject any voting paper which bears any writing or mark by which in his opinion the voter intended to be identified and also any voting paper which is void for uncertainty. He shall endorse in writing the word "rejected" on the voting papers which he rejects, recording grounds of rejection where necessary.

(3) When the counting of votes has been completed, the returning officer shall from amongst the candidates qualified to be chosen to fill a reserved seat, if any, declare, subject to the provisions of rule 6, the candidate who has secured the largest number of votes to be elected to fill such reserved seat. From amongst all the candidates, excluding those who have been declared elected to fill the reserved seats, if any, the returning officer shall then declare the candidate or candidates who have secured the largest number of votes to be elected to fill the unreserved seats.

(4) Where the number of votes secured by any two or more candidates is equal, the determination of the candidate who is to be declared elected shall be made by lot to be drawn in the presence of the returning officer and in such manner as he shall determine.

29. *Publication of result of election.*—(*a*) The returning officer shall cause the names of the elected candidates to be posted at the village chavdi or at the village panchayat office or at such other public place as may be appointed in that behalf by him and shall report such name or names immediately to the Collector.

(*b*) The Collector shall publish the result of the election by causing it to be posted up at his office ; at the village chavdi and at the village panchayat office. He shall also communicate it to the President of the District Local Board.

30. *Record of proceedings.*—The returning officer shall keep a record of the proceedings of every election.

31. *Custody of voting papers.*—After the counting of votes is completed the voting papers shall forthwith be replaced in the ballot boxes from which they were taken ; the boxes shall then be locked and sealed and kept by the returning officer in his custody.

32. *Production and Inspection of election papers.*—While in the custody of the returning officer the packets of voting papers, whether counted, rejected or tendered, and of the counterfoils thereof shall not be opened and their contents shall not be inspected or produced except under the orders of the Collector.

32A. *Scrutiny of tendered voting papers.*—For the purpose of determining whether the election of any member is invalid, the Collector may take into account the tendered voting papers received at the election.

33. *Destruction of voting papers.*—On the expiry of one month from the date of the declaration of the result of the election the returning officer shall, with the previous sanction of the Collector, destroy the voting papers including both those in the ballot boxes and those in the sealed packets in the presence of such members of the panchayat as the panchayat may nominate.

34. *Multiple election.*—Any person who is elected to more than one seat shall, by notice in writing signed by him and delivered to the returning officer within seven days from the date of publication of the result of the election or, if such publication has been made on different dates, within seven days from the latest of such dates, resign all but one of the seats. In default of such resignation, all the seats of such person in the panchayat shall become vacant.

35. *Casual vacancies.*—On receipt of a notice under sub-section (*1*) of section 23 regarding the occurrence of a vacancy in the office of a member of a panchayat or whenever an election is declared invalid under section 9, a bye-election to fill the vacancy so caused shall be held as soon as conveniently may be and these rules with the exception of rules 3 and 4 shall, with such modifications as may be necessary, apply to such bye-election.

FORM A.

(*Vide* rule 17.)

Counterfoil.

Voting paper No.

Voter's number on list of voters.

Voter's signature or mark.....

Foil.

Voting paper No.

Serial No.	Candidate's name	Candidate's symbol	Voter's mark
1			
2			
3			
4			
5 etc.			

Please read this carefully before recording your vote(s).

(1) You have.....vote (s).

(2) One cross means one vote.

(3) Do not put more than one cross opposite the name of any one candidate.

(4) Do not put more than.....cross (es) in all.

FORM B.

Tendered Votes Lists.

(*Vide* rule 26.)

The Village Panchayat of.....

.....Polling Station.

Name of Ward.	Name of Voter.	Number in Voter's List.	Number of votes recorded.

FORM C.

(*Vide* rule 9.)

Nomination Paper.

Name of Ward :

Full name of candidate :

Age :

Address :

Denomination of candidate :

(In the case of a ward in which a seat is reserved for women, Muslims, Harijans, Backward Tribes, state whether or not belonging to the community or communities for which seat or seats are reserved. If Harijan or member of a Backward Tribe, state the caste.)

Name of ward in which candidate is entitled to vote, and his number in the election roll :

I hereby declare that I am willing to serve as a member if elected.

Date

Serial No.

Signature of candidate.

Date on which and time at which nomination paper was delivered to Returning Officer.....

G. N., H. & L. G. D., No. S. 174 (10), dated 24th November 1948 (B. G., Pt. IV-B, p. 1307).

S. 108 (1) (el); Bombay Village Panchayats Secretaries (Conditions of Service) Rules, 1948.

In exercise of the powers conferred by clause (el) of sub- section (*1*) of section 108 of the Bombay Village Panchayats Act, 1933 (Bom. VI of 1933) and in supersession of Government Notifications, General Department, No. S. 174/10, dated 12th March 1940 and 31st July 1942 and No. S. 174/10 (*a*), dated 8th November 1941, the Government of Bombay is pleased to make the following rules, namely :—

1. These rules may be called the Bombay Village Panchayats Secretaries (Conditions of Service) Rules, 1948.

2. In these rules,—

(*a*) "Act" means the Bombay Village Panchayats Act, 1933 ;

(*b*) "first grade panchayat" means a panchayat the annual income of which is Rs. 3,000 or more ;

(*c*) "second grade panchayat" means a panchayat the annual income of which is Rs. 1,500 or more but less than R. 3,000 ;

(*d*) "third grade panchayat" means a panchayat the annual income of which is less than Rs. 1,500 ;

(*e*) "Secretary" means a Secretary of as panchayat.

Note 1.—In calculating the annual income of the Panchayat, the grant on account of salary and allowances of the Secretary paid by Government under section 33 of the Act shall be excluded.

Note 2.—In the case of new Panchayats, the grade shall be determined by the Collector of the district who may revise it later when the actual income for a complete financial year is known. In the cases of other Panchayats, the grade shall be determined with reference to the income derived by them during the immediately preceding complete financial year *plus* the estimated difference if any between the Government grant equivalent in amount to fifteen per cent. of the ordinary land revenue and one-fourth of the local fund cess within the limits of the villages which they were getting formerly from the District Local Board.

Qualifications.

3. No person shall be appointed to—

(*a*) the post of a Secretary of a first grade panchayat, unless he has passed at least the High School sixth standard or corresponding examination preceding the Matriculation examination ;

(*b*) the post of Secretary of a second grade or third grade panchayat, unless he has passed at least the Primary School Certificate Examination.

4. No person shall be eligible for appointment as a Secretary if he has attained the age of 25 years or if he has not attained the age of 18 years on the date of his appointment :

Provided that a panchayat may, for reasons to be recorded in writing, appoint any person as a Secretary notwithstanding the fact that he has attained the said age on the date of his appointment.

5. A person who has received training in rural development work shall be preferred to one who has not received such training, for being appointed as a Secretary.

Training.

6. Every person selected as a candidate for the post of a Secretary shall undergo training in the office of the District Local Board for two months or for such other period as the State Government may direct.

Probation.

7. The candidate who has completed his training to the satisfaction of the Chief Officer or Secretary of the District Local Board shall be appointed as a probationer for two years.

8. Before the completion of the period of his probation every probationer shall be required to pass such Departmental Examination as may be prescribed by the State Government from time to time. Failure to pass such examination shall ordinarily entail loss of appointment, but in exceptional cases, the panchayat may, for reasons to be recorded in writing give the probationer one more chance to pass the examination and may extend his probationary period for that purpose for a further period not exceeding one year.

9. The result of the Departmental Examination shall be published in the Official Gazette by the Collector as soon as possible after the conclusion of the examination, the names of the successful candidates being arranged in order of merit.

Powers and duties.

10. The Secretary shall perform all the administrative and other duties which may be entrusted to him by the panchayat. He shall also perform such other duties as the State Government may direct him to perform in connection with the rural welfare.

11. The Secretary shall carry out all the executive orders of the panchayat.

12. The Secretary shall be responsible for the supervision, direction and control of the servants of the panchayat.

13. The Secretary shall, subject to the provisions of the Act and the rules and by-laws made thereunder, grant, give or issue under his signature all licences and permits which may be granted, given or issued by the panchayat under the Act, other than licences for markets and slaughter houses.

14. The Secretary shall be responsible for the prompt recovery of the taxes and other dues of the panchayat.

15. The Secretary shall take prompt measures to remove any irregularity pointed out by the Auditor or by the District Local Board or the Collector, as the case may be.

16. The Secretary shall promptly report to the Sarpanch all cases of fraud, embezzlement, theft or loss of money or property of the panchayat. He shall also send copies of such report to the President of the District Local Board and the Collector.

Remuneration.

17. (1) Every person selected as a candidate for the post of a Secretary of a first grade panchayat during the period of his training, and every probationer during the period of his probation, shall draw pay at the rate of Rs. 40 per month. On being confirmed as Secretary of such panchayat, he shall draw pay in the scale of Rs. 42—2—80. A panchayat whose income exceeds Rs. 15,000 per annum may sanction a higher pay-scale for its Secretary with the previous sanction of the State Government.

(2) Every person selected as a candidate for the post of a Secretary of a second grade panchayat during the period of his training, and every probationer during the period of his probation shall draw pay at the rate of Rs. 30 per mensem. On being confirmed as Secretary of such panchayat, he shall draw pay in the scale of Rs. 31-1-50.

(3) Every person selected as a candidate for the post of a Secretary of a third grade panchayat during the period of his training, and every probationer during the period of his probation, shall draw pay of Rs. 20 or Rs. 30 per mensem, as may be determined by the panchayat. On being confirmed as Secretary of such panchayat, he shall draw pay in the scale of Rs. 21-1-40 or Rs. 31-1-50, as the case case may be.

(4) In every case, a selected candidate during the period of his training, a probationer during the period of his probation and a Secretary on being confirmed shall also be entitled to draw such allowances at such rates as may be prescribed under the rules framed by the District Local Board for its own servants.

Other conditions of service.

18. The Secretary shall devote his whole time and attention to the duties of his office and may not without the previous sanction of the panchayat, engage in any trade or undertake any employment while on duty or leave, other than the duties of his office :

Provided that the Secretary may, with the previous sanction of the panchayat, undertake in his spare time other work such as that of Village guide and receive remuneration for the same.

19. The Secretary shall reside at the place of his appointment. A group Secretary shall live in one of the villages in his group.

20. Every Secretary shall execute a surety bond for Rs. 300 in the case of a first grade panchayat and of Rs. 200 in the case of a second grade or third grade panchayat and in addition he shall provide one surety for a like amount in each case. The bond shall be executed in favour of the panchayat in one of the forms prescribed for Government servants in the Financial Rules framed under clause (*e*) of rule 37 of the Devolution Rules.

21. The leave of the Secretary shall be regulated according to the revised leave rules in the Bombay Civil Services Rules Manual, Volume II, and he shall be deemed to have the status of a superior servant for this purpose. He may also be granted casual leave on the same terms and to the same extent as the servants of the District Local Board. Casual leave shall be granted by the Sarpanch. In all other cases leave shall be granted by the panchayat which shall be recorded in a Service Book maintained by it.

22. The Secretary shall be required to retire on the date on which he attains the age of 55 years. He may be retained in service after the date of compulsory retirement only with the previous sanction of the Collector of the district, on public grounds which must be recorded in writing. Each Secretary's case should be taken up when he is approaching the age of superannuation and before the expiry of each extension of service. Extensions may not be granted for any period exceeding one year at one time, the first extension being given generally up to the end of the financial year. In cases in which it is proposed to grant extensions of service, reports should be made by the Village Panchayats to the Collector of the district at least two months before the necessity for sanction or fresh sanction arises.

23. The services of the Secretary of a panchayat may with his consent and with the consent of another panchayat of the same or higher grade, be transfered to the latter.

24. Without prejudice to the provisions of any law for the time being in force, the following penalties may for good and sufficient reasons, be imposed by the panchayat on the Secretary :—

(1) Censure ;

(2) Withholding of increments ;

(3) Reduction to lower stage in the time-scale prescribed under rule 17 ;

(4) Recovery from his pay of the whole or part of any pecuniary loss caused to the panchayat by negligence or breach of orders ;

(5) Fine ;

(6) Suspension ;

(7) Removal which does not disqualify from future re-employment ;

(8) Dismissal which ordinarily disqualifies from future re-employment :

Provided that no Secretary shall be removed from office or dismissed, save by the votes of at least two-thirds of the whole number of members of the panchayat and with the previous sanction of the Collector of the district.

Explanation–The discharge of a person appointed on probation during or at the end of the period of probation does not amount to removal within the meaning of this rule.

25. No Secretary shall be removed or dismissed from his office unless—

(*i*) he is given an intimation in writing regarding—

(*a*) the charge or charges against him ;

(*b*) the allegations on which each charge is based ;

(*c*) any other circumstances which it is proposed to take into consideration in passing orders on the case, and

(*ii*) he is given an opportunity—

(*a*) to cross-examine the witness against him ;

(*b*) to be heard in person :

Provided that the provisions of this rule shall not apply where action is to be taken on facts which have led to his conviction in a criminal Court.

G. N., G. D., No. S. 174/6, dated 2nd January 1935 (B. G., Pt. I-A, p. 12).

S. 108 (1) (f). Village Panchayats Budget and Accounts Rules, 1934.

Amended by G. N., G. D., No. S. 174/6-A, dated 28th June 1935.
Amended by G. N., G. D., No. S. 174/6-B, dated 28th June 1935.
Amended by G. N., G. D., No. S. 2103/33, dated 14th April 1938.
Amended by G. N., G. D., No. S. 174/6, dated 19th November 1941.
Amended by G. N., G. D., No. S. 174/6, dated 1st September 1942.

In exercise of the powers conferred by clause (*f*) of sub-section (*1*) of section 108 of the Bombay Village Panchayats Act, 1933 (Bom. VI of 1933), the Government of Bombay is pleased to make the following rules namely :—

1. These rules shall be called the Village Panchayats Budget and Accounts Rules, 1934.

2. In these rules unless there is anything repugnant in the subject or context—
(*i*) "Act" means the Bombay Village Panchayats Act, 1933.
(*ii*) "Official year" means the year commencing on the first day of April.
(*iii*) "Form" means a form appended to these rules.
(*iv*) "Section" means a section of the Act.
(*v*) "Village chavdi" includes a place deemed to be a chavdi under the Bombay Land Revenue Code, 1879.
(*vi*) Words and expressions not defined in these rules but defined in the Act shall have the same meaning assigned to them in the Act.

3. The budget estimate shall be submitted by a panchayat under sub-section (*1*) of section 36 on or before 10th October in each year and shall be in Form 1.

3-A. A statement of re-appropriation of funds in the budget estimates shall be prepared in form 23 and submitted to the district Local board.

4. A panchayat shall maintain its accounts in Forms 4 to 23 and shall annually submit to the district local board on or before the 1st June returns of income and expenditure in Forms 2 and 3.

5. If in the opinion of the district local board, having regard to the local conditions of any panchayat, it is not necessary to require the panchayat to maintain accounts in any of Forms 4 to 23, the district local board may, with the previous approval of the Collector, exempt such panchayat from maintaining accounts in any of the said forms notwithstanding anything contained in rule 4.

6. (1) The meeting of the adult residents of the village shall be convened under sub-section (*4*) of section 36 within two months after the close of the official year at the village chavdi and if there is no chavdi in the village at any other place in the village which in the opinion of the sarpanch is accessible to the residents of the village on a date to be fixed by the sarpanch.

(2) Three clear days before the date of meeting, notice in writing specifying the time and place at which the meeting is to be held and the business to be transacted thereat shall be posted at the place of meeting and shall also be given by beat of drum in the village.

(3) The sarpanch, and in the absence of the sarpanch, the deputy sarpanch shall preside at the meeting. In the absence of both the sarpanch and the deputy sarpanch the members present shall select one of their number to preside at the meeting.

FORM 1.

Budget Estimate of the Village Panchayat of Taluka District , for the year

Income.	Expenditure
Opening balance on 1st April 19 .	1. General Administration—
I. Amount allotted to the village fund by the State Government under section 191 of the Bombay District Municipal Act, 1901.	(*i*) Pay of establishment.
II. Proceeds of taxes or fees imposed under section 89—	(*a*) Secretary ;
(*i*) Tax upon the owners or occupiers of houses and lands.	(*b*) other establishment.
(*ii*) Pilgrim tax.	(*ii*) Travelling allowance—
(*iii*) Tax on fairs and festivals.	(*a*) of establishment ;
(*iv*) Tax on sales of goods.	(*b*) of Village Panchayat members.
(*v*) Octroi.	(*iii*) Official Contingencies.
(*vi*) Tax on marriages, adoptions and feasts.	2. Water Supply—
(*vii*) Any other tax (to be specified).	(*a*) Original works.
III. Fines and sums ordered to be paid as compensation realised under sections 45, 46 and 48—	(*b*) Repairs to—
(*a*) Fines under the Indian Penal Code and the Cattle-trespass Act, 1871.	(1) tanks ;
(*b*) Fines for breaches of by-laws.	(2) wells ;
(*c*) Compensation.	(3) maintenance and construction—river ghats or hels of potable water and supply of the same to the public from the water sources of the village.
(*d*) Other items.	3. Communications—
IV. Assignments—	(*a*) Construction of minor roads, bunds or culverts.
By the District Local Board under section 93 (1) (*i*).	(*b*) Maintenance of minor roads, bunds or culverts.
V. Contributions—	4. Other works of public utility.
(*a*) By the State Government.	5. Maintenance of public buildings vesting in the panchayat.
(*b*) By the District Local Board.	6. Sanitation and Conservancy—
(*c*) Other contributions.	(*a*) (*i*) Establishment.
VI. Fees under section 59.	(*ii*) Contingencies.
VII. Income from lands or other properties vesting in the panchayat.	(*b*) Construction and maintenance of—
VIII. Cattle-pound receipts.	(*i*) drains;
IX. Sale proceeds—	(*ii*) manure pits.
(*a*) Of dust, dirt, dung, refuse and other matter.	7. Lighting—
(*b*) Of unserviceable property.	(*a*) Establishment.
X. Miscellaneous receipts.	(*b*) Oil.
XI. Loans, deposits and advances—	(*c*) Other requisites.
(*a*) Loan from the State Government.	8. Fairs, bazars and cart-stands.
(*b*) Loan from the District Local Board.	9. Slaughter house—
(*c*) Funds placed at the disposal of a panchayat by a district local board, a local authority or the school board for the purpose of the village school and for carrying out other duties under section 28.	(*a*) Construction.
(*d*) Advances.	(*b*) Repairs.
Total Receipts.	10. Burning and burial grounds—
Grand Total (including opening balance).	(*a*) Purchase.
	(*b*) Maintenance.
	11. Cattle-pounds—
	(*a*) Establishment.
	(*b*) Contingencies.
	(*c*) Remuneration to pound-keepers.
	12. Tools and Plant.
	13. Interest on loans.
	14. Miscellaneous.
	15. Loans, deposits and advances—
	(*a*) Repayment of loans.
	(*b*) Repayment of deposits—
	(*i*) Expenditure on works transferred by the District Local Board.
	(*ii*) Expenditure on a village school.
	(*c*) Advances.
	Total Expenditure.
	Closing balance.
	Grand Total.

FORM 2.

Annual Account of Income of the Village Panchayat of for the year

1. Division.
2. District.
3. Name of Panchayat.
4. Opening balance.
5. The State Government allotment under section 191 of the Bombay District Municipal Act, 1901.

6. Receipts from taxes under section 89—
   (*a*) Tax upon the owner or occupiers of houses and lands.
   (*b*) Pilgrim Tax.
   (*c*) Tax on fairs and festivals.
   (*d*) Tax on sales of goods.
   (*e*) Octroi.
   (*f*) Tax on marriages, adoptions and feasts.
   (*g*) Any other tax (to be specified).

7. Receipts from fines and compensations—
   (*a*) Fines—
      (i) Fines under the Indian Penal Code and the Cattle-trespass Act, 1871, and fines and sums realized under sections 45 (*1*) (*a*) and (*b*) and 46 (*a*) and (*b*).
      (ii) Fines for breaches of by-laws inflicted under section 45 (*1*) (*c*).
   (*b*) Compensations under section 48.
   (*c*) Other items.

8. Assignments—
   By District Local Board under section 93 (1) (*i*).

9. Contributions—
   (*a*) By the State Government.
   (*b*) By District Local Boards.
   (*c*) Other contributions.

10. Fees under section 59.

11. Income from properties vesting in the panchayat.

12. Cattle-pound receipts.

13. Sale proceeds—
   (*a*) From dust, dung, dirt or refuse and other matter.
   (*b*) Unserviceable property.

14. Miscellaneous receipts.

15. Loans, deposits and advances—
   (*a*) Loan from the State Government.
   (*b*) Loan from District Local Board.
   (*c*) Funds placed at the disposal of a panchayat by a district local board, a local authority or a school board for the purpose of a village school and for carrying out the duties under section 28.

16. Total Receipts.

17. Grand Total (including opening balance).

18. Income per head of population.

FORM 3.

Annual Account of Expenditure of the Village Panchayat of for the year

1. Division.
2. District.
3. Name of Panchayat.
4. *General Administration*—
   (i) Pay of establishment.
      (*a*) Secretary.
      (*b*) other establishment.
   (ii) Travelling allowance.
      (*a*) of establishment.
      (*b*) of village Panchayat members.
   (iii) Official Contingencies.
5. Water Supply—
   (*a*) Original works.
   (*b*) Repairs to—
      (i) tanks;
      (ii) wells.
6. Communications—
   (*a*) Construction of minor roads, bunds or culverts.
   (*b*) Maintenance of minor roads, bunds or culverts.
7. Other works of public utility.
8. Maintenance of public buildings vesting in the panchayat.
9. Sanitation and Conservancy—
   (*a*) (i) Establishment.
      (ii) Contingencies.
   (*b*) Construction and maintenance of
      (i) drains;
      (ii) manure pits.
10. Lighting—
   (*a*) Establishment.
   (*b*) Oil.
   (*c*) Other requisites.
11. Fairs, bazars and cart-stands.
12. Slaughter houses—
   (*a*) Construction.
   (*b*) Repairs.
13. Burning and burial grounds
   (*a*) Purchase.
   (*b*) Maintenance.
14. Cattle pounds—
   (*a*) Establishment.
   (*b*) Contingencies.
   (*c*) Remuneration to pound-keepers.
15. Tools and Plant.
16. Interest on loans.
17. Miscellaneous.
18. Loan, deposits and advances—
   (*a*) Repayment of loans.
   (*b*) Repayment of deposits—
      (i) Expenditure on works transferred by the District Local Board.
      (ii) Expenditure on a village School.
   (*c*) Advances.
19. Total Expenditure.
20. Closing balance.
21. Grand Total.
22. Expenditure per head of population.

FORM 4.

General Cash Book for the year 19 .

The Village Panchayat of——————————

Cr.

Month and Date of Receipt.	Serial No.	Particulars of receipt.		Head of account.	Amount.	Daily total with opening balance.	Date of payment.
		From whom received.	On what account.				
1	2	3	4	5	6	7	8

Dr.

Cheque No.	Voucher No.	Particulars of Payment.		Head of Account.	Amount.	Daily total with closing balance.
		To whom paid.	On what account.			
9	10	11	12	13	14	15

Note.—The Cash Book should be signed by the sarpanch at the close of each day.

FORM 5.

Classified Register of $\frac{\textit{Receipts}}{\textit{Payments}}$ *for the month of* 19 .

The Village Panchayat of _____

Head of Account (as in budget).	Budget Grant.	Dates.															
		1	2	3	4	5	6	7	8	9	10	11	12	13	14	15	16

Dates.															Total for the month.	Total up to the end of the previous month.	Progressive Total.
17	18	19	20	21	22	23	24	25	26	27	28	29	30	31			

FORM 6.

General Receipt.

The Village Panchayat of———————————————

Book No. Receipt No.

Received from———————————a sum of Rupees———————

) on account of———————————

Secretary———————————

Note.—This receipt should be in carbon duplicate.

Note.—The Book Nos. and Receipt Nos. should be printed or stamped when the forms are issued.

FORM 7.

Assessment list of buildings and lands liable to taxation for the year 19 -19 .

The Village Panchayat of———————————————

Serial No.	Name of Street.	Property No.	Description of Property.	Name of Owner.	Name of Occupier.	Annual letting value or other valuation.
1	2	3	4	5	6	7

Amount of Taxes assessed.				Annual letting value or other valuation.	Result of appeals and subsequent alterations				Remarks including references to orders in case of subsequent increases and decreases. *Note.*—Remarks and corrections should be attested by the sarpanch.
Tax.	Tax.	Tax.	Total.		Tax.	Tax.	Tax.	Total.	
8	9	10	11	12	13	14	15	16	17

FORM 8.

Demand Register of assessed taxes for the year 19 -19 .

The Village Panchayat of———————

Ward
Circle.

Property No.	Name of the estate.	Name of the persons from whom tax is due.	Demand.									Receipt No. and date.
			Tax.			Tax.			Tax.			
			Arrears.	Current.	Total.	Arrears.	Current.	Total.	Arrears.	Current.	Total.	

(*Continued below.*)

Collections.									Remissions.				Balance.				Remarks including references to orders sanctioning remissions.
Tax.			Tax.			Tax.											
Arrears.	Current.	Total.	Arrears.	Current.	Total.	Arrears.	Current.	Total.	Tax.	Tax.	Tax.	Total.	Tax.	Tax.	Tax.	Total.	*Note.*—The remarks and corrections should be attested by the sarpanch.

FORM 9.

Receipt for Taxes.

The Village Panchayat of _____

Book No. Receipt No.

Received from _____ on account of the following taxes for the year 19 -19 for House No. Bill No.

Names of Taxes.	Amounts recovered.		
	Arrears.	Current.	Total.
	Rs. a. p.	Rs. a. p.	Rs. a. p.
House Tax			
——Tax			
——Tax			
Notice Fee			
Warrant Fee			

Date 19 .

Initials of the Collecting Karkun.

Note.—This receipt form should be in carbon duplicate.

Note.—The Book Nos. should be printed when the forms are issued.

FORM 10.

Register of Miscellaneous Demands for the year 19 -19.

The Village Panchayat of _____

Serial No.	Name and address of person by whom demand is payable.	Nature of demand.	Authority for demand.	Demand.			Bill No. and date.
				Instalment.	Amount.	Total.	

Collections.		Remission.		Balance.	Remarks.
No. and date of receipt.	Amount.	No. and date of order.	Amount.		*Note.*—The remarks and corrections should be attested by the sarpanch.

FORM 11.

Octroi Receipt.

The Village Panchayat of————————

Naka————

Book No.

Receipt No.

Name of importer. / owner.

Description of Goods.	Kind of conveyance or load.	Weight, number or value.	Rate of octroi.		Amount of octroi paid.
			Amount.	Per.	
Total ...					

Time of Import.

Date 19 .

Initials of Naka Karkun.

Toll Receipt No.

Wheel Tax Register.

Plate No.

Note.—This receipt should be in carbon duplicate.
Note.—The Book No. and Receipt No. should be printed when the forms are issued.

FORM 12.

Collection Register of Octroi for the year 19 –19 .

The Village Panchayat of————————————————

Naka.

Date.	Receipt No. and Book No.	Name of owner or Importer.	Description of Goods.	Kind of Conveyance.	Weight, Number or value.	Rate.		Amount of Octroi.	Remarks.
						Amount.	Per.		
						Total	...		

Remitted to as per Chalan No.

Signature of the Naka Karkun.

FORM 13.

OCTROI.

Consolidated Kird of Collections.

The Village Panchayat of————————

Date.	Names of Nakas.				Total.	Serial No. and Page of the Day Book to which credited.	Signature of Secretary.
	A.	B.	C.	D.			
	Rs. a. p.	Rs. a. p.	Rs. a. p.	Rs. a. p.			

Secretary———————— Sarpanch————————

FORM 14.

The Village Panchayat of————————————

Bill No.

Name of articles.	Quantity or Weight.	Rate.	Unit.	Amount.
				Rs. a. p.

1. Amount of allotment		Certified that the rates and quantities shown in this bill are correct and the articles have been received by me.
2. Previous expenditure		
3. Expenditure shown in this bill ...		
Total of 2 plus 3 ...		
Balance available ...		

Date.

Signature of person receiving the articles.

Submitted to the Panchayat for sanction. I have examined the claim and found it correct in all respects.

Secretary.

Resolution No. , dated

The sum of Rs. ————————shown in the bill is sanctioned.

Date. Sarpanch.

Received payment of Rs.( ) [in words] in full settlement of the claim.

Stamp.

Paid before me. Payees Signatures.

Signature of the payee.

Voucher No.
Entered in the Day Book on Page

Secretary.

FORM 15.

Scale Register

The Village Panchayat of_____

Name of appointment.	Sanctioned scale from 19			Sanctioned scale from 19		
	No.	Monthly pay of each appointment.*	Authority and signature of sarpanch.	No.	Monthly pay of each appointment.*	Authority and signature of sarpanch.
(1) General Administration.						

Sanctioned scale from 19			Remarks.
No.	Monthly pay of each appointment.*	Authority and signature of sarpanch.	

Total (1) General Administration.

*If the pay of any appointment is progressive the minimum and the maximum pay, the period and rate of increment should be given in the column in each case.

FORM 16.

Stamp Account for the year 19 —19 .

The Village Panchayat of_____

Date.	Receipts.		Issues.	
	Voucher No.	Value of stamp received.	Letters numbers.	Value of stamps affixed.
		Rs. a. p.		Rs. a. p.

Daily balance.	Initials of Secretary.	Remarks.

Note.—The balance of stamps on hand should be verified and certified at least once a month by he Sarpanch or other responsible officer.

FORM 17.

Stock Account of $\frac{\textit{Receipt Books.}}{\textit{Materials.}}$

The Village Panchayat of

Date. 1	Opening Balance. 2	Number or quantity received. 3	Total. 4	To whom issued or for what purpose. 5

Number or quantity issued. 6	Balance. 7	Signature of issuing officer. 8	Signature of person receiving. 9	Remarks. 10

Note.—The correctness of the stock on hand should be verified periodically by the sarpanch and necessarily at the end of the year.

FORM 18.

Form of Register of Dead Stock or Moveable Property

The Village Panchayat of

Serial No.	Description of article.	Authority for purchase and date of purchase.	Number or quantity.	Value.	Initials of Head of Office.
1	2	3	4	5	6
				Rs. a. p.	

Final Disposal		Amount realised and date of credit at treasury.	Balance in Stock.	Initials of Head of Office.	Remarks.
Number or quantity and nature of disposal.	Authority or voucher.				
7	8	9	10	11	12

FORM 19.

Register of $\frac{\textit{Advances.}}{\textit{Deposits.}}$

The Village Panchayat of

Month and Date.	Name of party.	Particulars of advance or deposit.	Voucher or receipt No.	Amount.	Monthly total.	Repayments in cash or adjustments.					
						April.	May.	June.	July.	August.	September.
1	2	3	4	5	6	7	8	9	10	11	12
						Rs.a.p.	Rs.a.p.	Rs.a.p.	Rs.a.p.	Rs.a.p.	Rs.a.p.

Repayments in cash or adjustments—*contd.*							Date of repayment or No. of voucher of adjustment.	Balance at the end of the year.	Remarks.
October.	November.	December.	January.	February.	March.	Total repayments.			
13	14	15	16	17	18	19	20	21	22
Rs.a.p.	Rs.a.p.	Rs.a.p.	Rs.a.p	Rs.a.p.	Rs.a.p.				

Note.—The remarks and the corrections should be attested by the sarpanch.

FORM 20.

Petty Cash Book.

The Village Panchayat of

Date.	No. of cheque.	From whom received.	Particulars.	Amount other than Imprests.	Imprest.	Total.	Date.
1	2	3	4	5	6	7	8

No. of voucher.	To whom paid.	Particulars.	Disbursement from amount shown in column 5.	Disbursement from Imprest.	Total.
9	10	11	12	13	14

FORM 21.

Muster Roll of Men employed on (nature of works) during the Month of 19 .

The Village Panchayat of

Name and Designation.	Father's name and village.	1	2	3	4	5	6	7	8	9	10	11	12	13	14	15	16	17	18	19	20	21

22	23	24	25	26	27	28	29	30	31	Total.	Rate.	Amount.	Fines.	Balance due.	Signature or thumb impression of payee.	Dated initials of paying officer made at the time of payment.

FORM 22.

The Village Panchayat of

(Outer Sheet.)

No. of 19 .

Division—
Public Works Department.
Dated 19 .

Fund Head—
Major Head—
Minor Head—
Service Head—
Departmental Head—

ESTIMATE framed by Executive Engineer, of the probable expense that will be incurrd in

(Call or Authority.)
Sanctioned by the V. P. Rs. and District Local Board

GENERAL DESCRIPTION.

ABSTRACT.

Quantity.		Items.	Rate.			Per.	Amount.	
			Rs.	a.	p.		Rs.	Dec.

Engineer,

Dated 19 . Executive Engineer.

(Inner Sheet.)

(Estimate Measurement Sheet.)

MEASUREMENT.

——	No.	Length	Breadth.	Depth.	Quantity Decim.	Total.

FORM 23.

Statement of Re-appropriations and Allotments approved by the Village Panchayat of during the month of 19 under its resolution No. , dated the

Consecutive No.	From				
	Main Head.	Budget Item.		Works, Service, etc.	Balance available.
		Item No.	Amount.		
1	2	3		4	5

To				Remarks.
Main Head.	Sub-Head.	Works, Service, etc.	Amount.	
6	7	8	9	10

FORM 23—*contd.*

No. of 19 .

MEMO. Dated 19 .

The undersigned has the honour to forward "Statement of Re-appropriations and Allotments" for the month of 19 .

Sarpanch

Village Panchayat of

To

The President,
District Local Board of

G. N., G. D., No. S. 174/11, dated 14th August 1940 (B. G., Pt. IV-B, p. 854).

S. 108 (1) (g), (h), (i), (j) & (l). Bombay Village Benches Rules, 1940.

In exercise of the powers conferred by clauses (*g*), (*h*), (*i*), (*j*) and (*l*) of sub-section (*1*) of section 108 of the Bombay Village Panchayats Act, 1933 (Bom. VI of 1933), and all other powers enabling it in this behalf and in supersession of the Bombay Village Benches Rules, 1934, published in Government Notification, General Department, No. S. 174/4, dated the 19th December 1934, the Government of Bombay is pleased to make the following rules, namely :—

A.—Preliminary.

1. *Short title.*—These rules may be called the Bombay Village Benches Rules, 1940.

2. *Definitions.*—In these rules, unless there is anything repugnant in the subject or context,—

(*i*) "Act" means the Bombay Village Panchayats Act, 1933 ;
(*ii*) "form" means a form appended to these rules ;
(*iii*) "member" means a member of a village bench ;
(*iv*) "section" means a section of the Act ;
(*v*) "village chavdi" includes a place deemed to be a chavdi under the Bombay Land Revenue Code, 1879 :
(*vi*) Words and expressions not defined in these rules but used in the Act shall have the meanings assigned to them in the Act.

B.—The manner in which the members constituting a Village Bench shall be elected.

3. *Mode of election of the members of a village bench.*—After the Sarpanch has been elected at the first meeting of a panchayat convened under section 17, the panchayat shall proceed to elect five persons out of its members for the purpose of constituting the village bench. Such election may be held either by show of hands or by ballot. The Sarpanch shall determine in the case of each election, after ascertaining the sense of the meeting at which the election is to be held, whether it shall be held by show of hands or by ballot.

4. *Procedure at elections held by show of hands.*—(1) When the election is to be held by show of hands, the procedure laid down in this rule shall be followed.

(2) The Sarpanch shall call upon all candidates who seek election to state their names to him.

(3) He shall put to vote the name of every candidate separately and shall declare the candidates who secure the largest number of votes to be elected.

(4) Where the number of votes secured by two or more candidates is equal, the determination of the candidate who is to be declared elected shall be made by lot to be drawn in the presence of the Sarpanch and in such manner as he shall determine.

5. *Procedure at elections held by ballot.*—(1) When an election is to be held by ballot, the procedure laid down in this rule shall be followed.

(2) The Sarpanch shall call upon all candidates who seek election to state their names to him.

(3) The Sarpanch shall give to every member of the panchayat who is present at the meeting five voting slips and shall ask him to write on each slip the name of the candidate whom he wants to be elected to the village bench.

(4) After the voting slips are duly filled in, they shall be folded and handed over to the Sarpanch. He shall appoint two scrutineers who shall be approved by the members of the panchayat present at the meeting, for counting of the votes.

(5) The scrutineers shall count the votes and report immediately the result of voting to the Sarpanch.

(6) The Sarpanch shall declare the candidates who have secured the largest number of votes to be elected.

(7) Where the number of votes secured by two or more candidates is equal, the determination of the candidate who is to be declared elected shall be made by lot to be drawn in the presence of the Sarpanch and in such manner as he shall determine.

6. *Manner of publishing the result of election.*—The result of every election shall be pasted on a notice board at the office of the panchayat.

C.—Election of Chairman of the Village Bench, the conduct of business before the Village Bench, the times and places of its sittings, etc.

7. *Election of Chairman.*—After the panchayat has elected the members of the village bench, the Sarpanch shall convene a meeting of the bench for the purpose of electing its Chairman. At such meeting, the Chairman shall be elected by the bench.

7A. The Sarpanch shall preside over that meeting until the Chairman has been elected.

7B. The Sarpanch so presiding shall not be at liberty to vote upon, or to make any proposition at the meeting unless he is himself a member of the bench.

7C. If the Sarpanch is unable, or, for any reason, fails to preside over the meeting, the members present shall elect from amongst themselves a chairman for the meeting. Such chairman shall preside over the meeting, until the Chairman of the Bench has been elected.

7D. In case of an equality of votes the result of the election shall be determined by lot to be drawn in the presence of the person presiding over the meeting, in such manner as he may determine.

8. *Appointment of Chairman when Chairman is absent or unable to preside.*—The Chairman of the village bench shall preside at every sitting of such village bench. In the absence of the Chairman or in case of his inability to preside at any sitting, the members present shall elect a member from among those present to be ths Chairman for that sitting. If the number of votes secured by two or more membere for election as a Chairman is equal, the determination of the member who should be considered elected shall be made by lot.

9. *Place of sitting.*—Every village bench shall sit at the place of sitting of the panchayat fixed in accordance with the by-laws made under section 19 and if such place is not available at the village chavdi :

Provided that if in any village there is no such village chavdi the village bench may sit at any other place which is approved by the Sub-Divisional Magistrate within whose jurisdiction the village is situated and which is accessible to all persons concerned.

10. *Hours of sitting.*—The Chairman of the village bench shall, in consultation with other members, fix the hours of sitting of such bench.

11. *Registers.*—Every village bench shall maintain the following registers :—

(1) Register of proceedings in Form I.

(2) Register of suits in Form II.

(3) Register of cases in Form III.

12. *Language.*—The proceedings of a village bench shall be held and all registers of the bench shall be maintained in the principal regional language of the district in which the village is situate, or in such other language of the village as the Sub-Divisional Magistrate within whose jurisdiction the village is situate may direct.

13. *Hearing of suits or cases and adjournments.*—So far as is practicable every village bench shall finish the hearing of a suit or case on the day fixed for such hearing. If for any reason the hearing of any suit or case is not finished on any day, the bench shall after recording its reasons in writing for the adjournment, adjourn the hearing, if practicable, to the following day and shall then continue the hearing from day to day. If any suit or case is not decided within fourteen days of the date of its first hearing, the chairman shall report the reasons therefor to the Sub-Divisional Magistrate within whose jurisdiction the village is situated.

14. *Recording of evidence.*—Every village bench shall record in the register of suits or register of cases as the case may be a minute of the proceedings of every suit or case heard by it, containing the substance of the application, the statement made by the defendant or the accused, and the evidence given in such suit or case.

15. *Documents.*—If any documents are produced in any suit or case, they shall be endorsed to that effect and a note of them taken in the register of suits and cases, as the case may be. Such documents shall be returned by the village bench to the person producing the same after the suit or case is decided.

16. *Decision to be recorded.*—Every village bench shall record in the register of suits (Form No. II) or the register of cases (Form No. III), as the case may be, its decision and reasons in brief for its decision, and the members giving the decision shall affix their signatures or thumb impressions thereto. The decision shall be communicated to the parties present whose signatures or thumb impressions shall then be taken in the register.

D.—Fees for institution of suits, Forms of summons, etc.

17. *Fees on institution of a suit or case.*—Fees shall be charged at the following rates for the institution of suits or cases :—

(1) In the case of a suit when the amount or value of the claim—

(*a*) does not exceed Rs. 10	Eight annas.
(*b*) exceeds Rs. 10 but does not exceed Rs. 25	One rupee.
(*c*) exceeds Rs. 25 but does not exceed Rs. 50	One rupee and eight annas.
(*d*) exceeds Rs. 50 but does not exceed Rs. 75	Two rupees.
(*e*) exceeds Rs. 75 but does not exceed Rs. 100	Two rupees and eight annas.
(2) In the case of any case (other than a case instituted on behalf of a panchayat or by a public servant in his official capacity in respect of any offence or a breach of any by-law)	Eight annas.

18. *Form of summons.*—Every summons issued by a village bench shall be in duplicate and shall be in Form IV in the case of a defendant or accused and in Form V in the case of a witness.

19. *Process fees.*—For every summons issued by a village bench, when the summons is to be served within the village, a fee of one anna, and when the summons is to be served outside the village, a fee of four annas, shall be charged.

20. *Receipt of fees.*—The fees chargeable under rules 17 and 19 shall be paid in cash to the Chairman, or in his absence from the village, either to the Secretary of the Panchayat, or to the member appointed under section 59 for receiving applications regarding institution of suits or cases. Such Chairman, Secretary or member shall forthwith give a receipt under his signature for the amount paid to him, in such form as the village bench has approved in this behalf and shall credit the amount to the village fund and enter it in the column relating to fees in the cash book of the village bench.

21. *Payment of fees to village officers for service of summons.*—If a village officer is employed to serve a summons the fee charged under rule 19 shall be paid to such officer.

E.—Supply of copies, etc.

22. *Supply of copies of entries in registers.*—(1) An application for copy of any entry in the register of suits or in the register of cases shall be made to the Chairman of the village bench or in his absence either to the Secretary of the village bench or to the member appointed under section 59 for receiving applications regarding institution of suits or cases. Every such copy shall be furnished within a week from the date of the receipt of the application. A fee of four annas shall be paid for each such copy.

(2 The Chairman of the village bench shall either make the copy himself or cause it to be made by the Secretary of the Panchayat, or by the Talati of the village or by a school teacher or by any other literate person. Every copy shall be compared by the Chairman with the register and shall be certified by him to be a true copy.

(3) Half of the amount of copying fee received under sub-rule (1) shall be paid to the person making the copy and the balance shall be credited to the village fund.

F.—Miscellaneous.

23. *Payment of fine, compensation, etc., and receipt therefor.*—Every person liable to pay any amount on account of fine, compensation or otherwise under an order or decree of a village bench shall pay such amount to the Chairman of the village bench or, in his absence from the village, either to the Secretary of the Panchayat, or to the member appointed under section 59 for receiving applications regarding institut on of suits or cases. Such Chairman, Secretary or member shall give a receipt for the amount so received in the "general receipt" form prescribed in the case of accounts of the village panchayat under the rules made under clause (*f*) of sub-section (*1*) of section 108 of the Act. When any amount is paid to any person under an order or decree of a village bench, a receipt for the amount so paid shall be taken from such person in such form as may be approved by the village bench.

24. *Costs in suits.*—The order of costs in suits for money shall follow the event and such costs shall include the fees paid under rules 17 and 19 and such part of the expenses of witnesses incurred under sub-section (*3*) of section 67 as the village bench may deem reasonable to award.

FORM No. I.

(*See* RULE 11.)

Register of Proceedings.

Date.	Name of members present.	Business transacted.
1	2	3

FORM No. II.

(*See* RULE 11.)

Register of Suits instituted in the Village Bench of

Suit No.	Date of application.	Name, age, caste, father's or husband's name and residence of plaintiff; substance of his statement, his signature or thumb-impression and date, and the signature of the Chairman or member (sec. 60).	Date, time and place fixed for sitting (sec. 61).	Date, time and plac fixed for producing evidence and for hearing the suit (sec. 62).
1	2	3	4	5

Substance of evidence of the plaintiff and the names of his witnesses and the substance of their evidence.	Name, age, caste, father's or husband's name and residence of defendant or his representative; substance of his statement and substance of the evidence of his witnesses together with their names.	Decree or order passed, with brief reasons, showing *inter alia* the amount decreed, if any. The date of the decree or order (rule 16).	Date on which and the manner in which the decree or order was satisfied or adjusted, wholly or in part (sec. 80).	Any subsequent order passed by the District Court (sec. 87).	Transfer of suit by the District Court (*see* sec. 87 A).
6	7	8	9	10	11

Signatures or thumb-impressions of the members of village bench passing decree/order.

Signatures or thumb-impressions of the members of village bench disagreeing.

Signature of the Chairman.

Signatures or thumb-impressions of the parties as per rule 16.

FORM No. III.

(*See* RULE 11.)

Register of Cases instituted in the Village Bench of

Case No.	Date of application.	Name, age, caste, father's or husband's name and residence of complainant; substance of his statement, his signature or thumb-impression and date, and signature of the Chairman or member (sec. 60).	Date, time and place fixed for sitting (sec. 61).	Date, time and place fixed for hearing of the case (sec. 62).	Substance of the evidence of the complainant and his witnesses together with their names.

Name, age, caste, father's or husband's name and residence of the accused, or his representative and substance of his statement, his signature or thumb-impression and date, and substance of the evidence of witnesses on his behalf together with their names.	Orders passed with brief reasons: the date of the order (rule 16).	Recovery of the amount of fine or compensation and date (sec. 85).	Any subsequent order passed by District Magistrate (sec. 87).	Transfer of case by District Magistrate (*see* sec. 87 B).

Signatures or thumb-impressions of members of the village bench passing the orders.

Signatures or thumb-impressions of members of the village bench disagreeing.

Signature of Chairman.

Signatures or thumb-impressions of the parties as per rule 16.

FORM No. IV.

(*See* RULE 18.)

Summons to Defendant or Accused.

Number of $\frac{\text{suit}}{\text{case}}$ _____

Names of parties _____

Nature of $\frac{\text{claim}}{\text{complaint}}$ _____

Date of institution _____

Whereas this $\frac{\text{suit}}{\text{case}}$ will be heard before the village bench of _____ on (date and time) _____ at (place) _____ you _____ are hereby required to attend with documents if any and your witnesses to defend your $\frac{\text{suit}}{\text{case}}$.

Date _____

Signature of Chairman.

FORM No. V.

(*See* RULE 18.)

Summons to Witness.

Number of $\frac{\text{suit}}{\text{case}}$ _____

Names of parties _____

Nature of $\frac{\text{claim}}{\text{complaint}}$ _____

Date of institution _____

Whereas you _____ have been required

$\frac{\text{to give evidence}}{\text{to produce the document mentioned below}}$ in the above $\frac{\text{suit}}{\text{Case}}$ you are hereby

required $\frac{\text{to appear}}{\text{to produce}}$ the document aforesaid before the village bench

of _____ on (date and time) _____

at (place) _____.

Dated _____

Signature of the Chairman.

S. 108 (1) (gg).

G. N., G. D., No. S. 174-11-1, dated 19th January 1940 (B. G., Pt. IV-B, p. 59).

Amended by G. N., G. D., No. S. 174-11-1, dated 20th September 1943.

In exercise of the powers conferred by clause (*gg*) of sub-section (*1*) of section 108 of the Bombay Village Panchayats Act, 1933 (Bom. VI of 1933) the Government of Bombay is pleased to make the following rule, namely :—

Rule under clause (gg) of sub-section (1) of section 108 of the Bombay Village Panchayats Act, 1933 (Bom. VI of 1933), prescribing the duties, which the secretary of a panchayat acting as the Judicial Clerk of that panchayat shall do.

The secretary of a panchayat acting as the Judicial Clerk of the Village Bench shall perform the following duties, namely :—

(*a*) He shall maintain the registers of suits and proceedings and of cases instituted, heard or decided by the village bench in the form prescribed by the Bombay Village Benches Rules, 1934.

(*aa*) He shall submit a monthly return of suits and cases instituted before the village bench in the Form appended to this rule, to the District Court and the District Magistrate respectively.

(*b*) He shall furnish to the village panchayat for incorporation in its accounts—

(i) all sums recovered as fines or compensation under section 45, 46 or 48 of the said Act ;

(ii) all other sums ordered by a Court to be placed to the credit of the village fund ;

(iii) fees levied for the institution of suits and cases under section 59 of the said Act ; and

(iv) the expenditure incurred by the Village Bench in connection with its judicial work.

(*c*) He shall execute the orders of the Village Bench.

(*d*) He shall perform such other duties as the State Government or the Village Bench may entrust to him in connection with the functions of the Village Bench.

FORM.

Form referred to in rule (aa).

Return of $\frac{\text{suits}}{\text{cases}}$ before the village bench of for the month of 19 .

Number of $\frac{\text{suits}}{\text{cases}}$ before the village bench.

Pending at the beginning of the month.	Instituted during the month.	Disposed of during the month.	Outstanding at the end of the month.
1	2	3	4

Commissioners' Notification No. V.P. 123, dated 28th January 1943 (B. G., Pt. IV-C, p. 198). S. 108 (1) (m)

Amended by Commissioners' Notification No. V.P. 123, dated 14th April 1949.
Amended by Commissioners' Notification No. V.P. 123, dated 16th March 1950.

In exercise of the powers of Government to make rules under clause (*m*) of sub-section (*1*) of section 108 of the Bombay Village Panchayats Act, 1933 (Bombay VI of 1933), delegated to them under Government Notification, General Department, No. S. 1741 (*a*), dated 1st November 1941, the Commissioners of Divisions after considering the objections and suggestions received in response to draft notification No. V. P. 123, dated 11th September 1941, are pleased to make the following rules prescribing the rate at which, and the manner in which, the tax upon the owners or occupiers of houses and lands under sub-section (1) of section 89 of the said Act shall be levied by the Panchayats constituted for the areas within their respective jurisdictions namely :—

Rules regarding the levy of tax on owners or occupiers of houses and lands by Village Panchayats.

1. In these rules unless there be something repugnant in the subject or context—

(*a*) " Owner " includes the person who receives or is entitled to receive rent of the house or land if such house or land is let ;

(*b*) " Occupier " includes a person in actual possession of a house or land whether as owner, agent or tenant ;

(*c*) " annual letting value " means the annual rent which the house or land might be reasonably expected to let per year or from year to year ;

(*d*) " house " means any building or set of buildings within the same enclosure and used by the same occupier ;

(*e*) " land " means any land which is not subject to payment of agricultural assessment.

2. Every panchayat mentioned in the schedule hereto annexed shall levy a tax on the owners or occupiers of houses and lands within the limits of the village at the rates specified opposite to it in the next column of the said schedule, except the following cases—

(*a*) lands and buildings belonging to the Local Boards, Municipalities, the Municipal Corporation for the city of Bombay and Panchayats, and used for public purposes and not used or intended to be used for purposes of profits ;

(*aa*) lands and buildings belonging to Government, whether or not used or intended to be used for purposes of profit, but not including lands and buildings in respect of which a railway administration is liable to pay tax or a sum in lieu thereof in virtue of a notification under section 3 of the Railways (Local Authorities' Taxation) Act, 1941.

(*b*) lands and buildings used solely for religious, educational and charitable purposes ;

(*c*) lands and buildings of a capital value of less than Rs. 100 or an annual letting value of Rs. 6 or less.

3. These rules, together with a notice that a tax on the owners or occupiers of houses and lands within the limits of the village shall be levied at the rates mentioned in such notice, shall be published by each Panchayat by affixing copies of such rules and notice in the office of the Panchayat. The Panchayat shall also announce by beat of drum the fact of such publication. The tax as prescribed shall, from a date which shall be specified in the notice and which shall not be less than one month from the publication of such notice, be imposed accordingly, provided that—

(*i*) the tax shall be leviable for the year beginning on 1st April and ending on 31st March and shall not come into force except on the following dates, *viz.*, 1st April, 1st July, 1st October or 1st January, in any year, and

(*ii*) if it comes into force on any day other than the 1st April, it shall be leviable by the quarter till the 1st April next ensuing.

4. (1) The Sarpanch shall as soon as possible after the publication of these rules under rule 3 and in any case not later than the 1st December following prepare or have prepared an assessment list showing :—

(*a*) the serial number of each house or land ;

(*b*) the name of the owner and the occupier if known ;

(*c*) the capital valuation or the annual letting value as the case may be ; and

(*d*) the amount of tax assessed thereon.

(2) When the tax is assessed on the annual letting value a sum equal to 10 per cent. of the said valuation shall be deducted therefrom in lieu of all allowance for repairs or on any other account whatsoever.

(3) For the purpose of preparing such assessment list the Sarpanch or any person acting under his authority may inspect any house or land in the village.

5. When the name of the person primarily liable for the payment of the tax cannot be ascertained, it shall be sufficient to designate him in the assessment list and in any notice which it may be necessary to serve upon the said person as " the holder " of such premises without further description.

6. When the assessment list is completed, a notice shall be published by beat of drum in the village that the list is open for inspection at the office of the Panchayat and that objections will be considered and decided by the Panchayat on a day which shall not be within thirty days of the date of notice aforesaid.

7. Every person whose name is in the list, every person claiming to be the owner or occupier of any property, every person in possession of any property, included in the list, and the agent of such person, shall be at liberty to inspect the list, and to make extracts therefrom without charge.

8. All objections to the assessment will be considered and decided by the Panchayat on the date specified in the notice published under rule 6 or on any later date to which the meeting may be adjourned and the decision of the Panchayat shall be communicated to the person objecting to the assessment. An appeal shall lie to the District Local Board within thirty days of the date of communication of the decision and the order of the District Local Board shall be final. The Panchayat shall cause all amendments, necessary in accordance with the order of the District Local Board, when an appeal is preferred, and the decision of the Panchayat in other cases, to be made in the assessment list which shall be authenticated by the signature of the Sarpanch.

9. The entries in the list authenticated under the last preceding rule shall be conclusive evidence of the amount of the tax leviable.

10. (1) The Panchayat may at any time alter the assessment list by inserting or altering an entry in respect of any property, such entry having been omitted from or erroneously made in the assessment through fraud, accident or mistake or in respect of any house constructed, altered, added to or reconstructed in whole or in part, where such construction, alteration, addition or reconstruction has been completed after the preparation of the assessment list, after giving notice to any person interested in the alteration of the list of a date not less than one month from the date of service of such notice, before which any objection to the alteration should be made.

(2) An objection made by any person interested in any such alteration before the time fixed in such notice shall be dealt with in all respects as if it were an application under rule 6.

(3) An entry or alteration made under this rule shall have the same effect as if it had been made in the case of a house constructed, altered, added to or reconstructed on the day on which such construction, alteration, addition or reconstruction was completed or on the day on which the new construction, alteration, addition or reconstruction was first occupied, whichever first occurs, or in other cases, on the earliest day in the current official year on which the circumstances justifying the entry or alternation existed ; and the tax or the enhanced tax, as the case may be shall be, levied in such year in the proportion which the remainder of the year after such day bears to the whole year.

11. (1) When any house or any portion of a house which is liable to the payment of a rate on houses is demolished or removed, the person primarily liable for the payment of the said rate shall give notice thereof in writing to the Sarpanch.

(2) Until such notice is given, the person aforesaid shall continue liable to pay every such rate as he would have been liable to pay in respect of such house, if the same, or any portion thereof, had not been demolished or removed :

Provided that nothing in this rule shall apply in respect of a house or portion of a house which has fallen down or been burnt down.

12. (1) It shall not be necessary to prepare a new assessment list every year. Subject to the condition that every part of the assessment list shall be completely revised not less than once in every three years, the Panchayat may adopt the valuation and assessment contained in the list for a year, with such alterations as may be deemed necessary, for the year immediately following.

(2) But the provisions of rules 4 to 11 shall be applicable every year as if a new assessment list had been completed at the commencement of the official year.

13. The tax shall be leviable primarily from the actual occupier of the house or land upon which it is assessed, if such occupier is the owner of such house or land.

If the and or house is not occupied by the owner himself the tax be primarily leviable from—

(*a*) the lessor, if the property is let,

(*b*) the superior lessor, if the property is sublet,

(*c*) the person in whom the right to let the same vests if it is unlet.

(*d*) the person, to whom the land or house has been transferred, if the owner of the land or house has left the village or cannot otherwise be found.

On failure to recover any sum due on account of such tax from the person primarily liable, such portion of the sum may be recovered from the occupier of any part of the house in respect of which it is due in the ratio which the Sarpanch decides to be an equitable ratio to the amount of tax assessed on the whole house in the authenticated list.

The decision of the Sarpanch in this matter is appealable to the Panchayat whose decision shall be final.

14. Where any building or land which is assessed to a rate payable by the year has remained vacant and unproductive of rent throughout the year or portion of the year for which the rate is leviable, the Panchayat shall remit or refund the amount of the rate proportionate to the period of vacancy :

Provided that no such remission or refund shall be granted unless the building or land as aforesaid is vacant and unproductive of rent for not less than sixty consecutive days and that notice in writing of the fact of the building or land being vacant and unproductive of rent has been given to the Sarpanch :

Provided further that no remission or refund shall be granted for any period previous to the date on which such notice is given to the Sarpanch.

15. The tax shall be recovered by the Sarpanch or by any other person duly authorised by the Panchayat in this behalf. A receipt for every such payment shall be given by the person receiving it.

16. (1) Payment of the tax may be made either in cash or by the rendering of work and labour but shall be made in cash unless notice is given in writing to the Sarpanch that work and labour will be rendered in lieu of cash.

(2) The notice shall be in the Form " A ". The Panchayat shall supply copies of the form free of charge on demand.

(3) If such notice is not given before the 1st of April in any year or, if the tax comes into force on any day other than 1st April, before the day on which it comes into force, the notice shall take effect from 1st April next following unless the Sarpanch orders otherwise.

(4) Such notice once given shall be valid until it is withdrawn or until the work or labour appointed by the Sarpanch to be rendered is refused, or cash payment is offered in lieu of labour. Such cash payment when offered shall be accepted.

(5) The Sarpanch shall enter in a register the names of all persons liable to the tax who have given notice that they will render work and labour in lieu of cash and shall appoint the work and labour to be rendered and the time for it to be rendered. He shall enter in the register the value of the work to be rendered, the date or dates on which it is rendered and the value of the work or labour rendered on such date or on each of such date. The value of a day's work in cash shall be entered in writing in the register by the Sarpanch. The decision of the Sarpanch as to the value of the work done shall be final.

(6) If the work or labour is not rendered to the full amount due for the period ending 31st March before the period elapses, the balance still due shall become forthwith payable in cash.

Schedule.

1.	Village Panchayats, which were levying the house tax before the 28th January 1943.	The rate in force on the date immediately preceding the said date, subject to the maxima and minima prescribed in Government Notification, Health and Local Government Department, No. S. 174/1(*b*), dated 13th July 1948.
2.	All other Village Panchayats ...	Re. 0–4–0 per Rs. 100 of the capital value or fraction thereof, or 6¼ per cent. of the annual letting value.

FORM A.

(Rule 16.)

To

The Sarpanch*

I† wish to render work and labour in lieu of cash in payment of the house tax due from me to the Panchayat.

(Signature)

Date

Accepted

Sarpanch.

*Name of Village. †Name of assessee.

Commissioners' Notification No. V.P. 29, dated 24th February 1944 (B. G., Pt. IV-C, p. 221).

S. 108 (1) (m) & (s) Bombay Village Panchayats Taxes and Fees Rules, 1944.

Amended by Commissioners' Notification No. V.P. 29, Erratum, dated 4th November 1944.
Amended by Commissioners' Notification No. V.P. 29, dated 4th January 1946.
Amended by Commissioners' Notification No. V.P. 29, dated 3rd August 1946.
Amended by Commissioners' Notification No. V.P. 29, dated 14th April 1949.
Amended by Commissioners' Notification No. V.P. 29, dated 26th May 1949.
Amended by Commissioners' Notification No. V.P. 29, dated 14th October 1949.
Amended by Commissioners' Notification No. V.P. 29, Erratum, dated 27th February 1950.

In exercise of the powers of Government to make rules under clauses (*m*) and (*s*) of sub-section (*1*) of section 108 of the Bombay Village Panchayats Act, 1933 (Bom. VI of 1933), delegated to them under Government Notifications, General Department, No. S. 174/1, dated 3rd June 1941 and 13th October 1943, the Commissioners of Divisions after considering the objections and suggestions received in response to draft Notification No. V. P. 29, dated 27th October 1943, are pleased to make the

following rules under clauses (*m*) and (*s*) of sub-section (*1*) of section 108 of the said Act, prescribing under section 89 (*2*) the rate and the manner in which taxes and fees specified in that section shall be leviable by the Panchayats, namely :—

PART I.

General.

1. These rules may be called the Bombay Village Panchayats Taxes and Fees Rules, 1944.

2. Every Panchayat before deciding to levy or to enhance a tax or fee under sub-section (*2*) of section 89 of the Bombay Village Panchayats Act, 1933, shall follow the following procedure, namely :—

(*a*) The Panchayat shall pass a resolution at a meeting of the Panchayat selecting the tax or fee proposed to be levied or enhanced.

(*b*) The Panchayat shall then notify to the public the proposal together with that part of these rules which relate to that tax or fee by beat of drum in the village and by means of a notice affixed in the office of the Panchayat and at the village chawdi, specifying a date not earlier than one month from the date of such publication on or after which the Panchayat shall take the proposal into consideration.

(*c*) Any inhabitant of the village objecting to the levy or enhancement of the tax or fee proposed by the Panchayat may make any objection or suggestion in writing on or before the date specified in the notice published under rule 2(*b*) or orally on the day or days on which the Panchayat considers the poposal.

(*d*) On the date fixed under the rule 2(*b*) and on the following days if necessary, the Panchayat shall consider all objections and suggestions made under clause (*c*) and may approve, modify or reject the proposal.

3. When a Panchayat decides to levy or enhance any tax or fee specified in sub-section (*2*) of section 89 the rules in that part of these rules which relates to that tax or fee, together with a notice that the tax or fee prescribed in the said part shall be levied or enhanced at the rates specified therein, shall be published by the Panchayat by affixing copies thereof in the office of the Panchayat. It shall also announce by beat of drum in the village the fact of such publication. The tax or fee shall accordingly be levied from the date which shall be specified in the notice and which shall not be less than one month from the date of publication of the notice.

4. An appeal against the assessment, levy, enhancement or imposition of any tax or fee shall lie to the District Local Board within 30 days of the decision the Panchayat to assess, levy or enhance or impose the tax or fee.

PART II.

Pilgrim Tax.

5. In this part a pilgrim means a person who enters the limits of the village for religious worship at any place of worship within the said limits, but does not include a person so entering, who is under the age of 12 years, or a resident of the village or a religious mendicant or servants of Government or of Local bodies deputed for duty at the fair. If a question arises whether a person is a pilgrim or not, the decision of the Sarpanch shall be final.

6. (1) A Panchayat which decides to levy the pilgrim tax shall levy it at the rate of six annas on each pilgrim visiting the village during such period as may be fixed by the Panchayat with the approval of the District Magistrate :

Provided that where a panchayat was levying such tax immediately before the date on which these rules are made, the panchayat shall levy the tax at the rates in force on the day immediately preceding the said date.

(2) The rate referred to in sub-rule (1) shall be subject to the maximum prescribed in Government Notification, General Department, No. S. 174/1, dated the 18th December 1934, as amended by Government Notification No. S. 174(1), dated the 23rd February 1943.

7. On payment of the tax a pass shall be issued to each pilgrim.

8. The pass shall be valid for the full period determined under rule 6.

9. The panchayat shall determine the size, form and colour of the passes and shall have them printed.

10. The tax shall be collected at such place or places as may be fixed by the panchayat for the purpose.

PART III.

Tax on fairs, festivals and entertainments.

11. (1) A panchayat which decides to levy a tax on fairs and festivals shall levy it at the rates specified in the Schedule annexed to this Part;

Provided that where a panchayat was levying such tax immediately before the date on which these rules are made, the panchayat shall levy the tax at the rates in force on the day immediately preceding the said date.

(2) The rates referred to in sub-rule (1) shall be subject to the maximum prescribed in Government Notification, General Department, No. S. 174 (1), dated 18th December 1934, as amended from time to time.

12. The panchayat shall, with the approval of the District Magistrate, determine the period or periods during which, and the limits of the area within which the tax shall be levied:

Provided that no tax shall be levied for any open space or plot of land, occupied for exhibitions and demonstrations arranged by Local Bodies or any Department of Government, or any charitable institution or association for any purpose connected with social or educational welfare, from which no profit is to be derived.

13. No person shall, during the period and within the limits determined under rule 12, occupy any open space or plot of land for the purpose of a shop, booth or stall, or for doing business of any kind, for a cinema, circus or other entertainment without obtaining a permit from the panchayat.

14. The person authorised by the panchayat in this behalf shall receive payment of the tax, give a receipt for the same, and thereupon issue a permit.

15. The permit shall be valid for the full period determined under rule 12.

16. The panchayat shall determine the form of the receipt and of the permit granted under rule 14.

16-A. Unless there is anything repugnant in the subject or context—

(i) "Entertainment" means and includes a drama, cinema, circus, exhibition, amusement, games or sport, to which persons are admitted for payment;

(ii) "payment for admission" means and includes—
(*a*) any payment for seats or other accommodation in a place of entertainment and
(*b*) any payment for a programme or synopsis of an entertainment;

(iii) "proprietor" in relation to any entertainment includes owner, manager, agent, or any person responsible for the management thereof;

(iv) "admission to an entertainment" includes admission to any place in which the entertainment is held.

16-B. A panchayat, which decides to levy a tax on entertainments, shall levy it at the following rates:—

1. For exhibition, amusement, game or sport—Re. 1;

2. For each show of a drama, circus or cinema —Re. 1-8-0;

Provided that any entertainment, which is held for a philanthropic or charitable purposes and where the proceeds arising therefrom are given for such purpose, shall be exempt from the payment of the tax.

16-C. The tax shall be due and payable on each occasion before the beginning of each entertainment; and it shall be recovered from the proprietor.

16-D. The Secretary of the panchayat or the person authorised by the panchayat in this behalf, shall receive the payment of the tax and give a receipt for the same.

16-E. The panchayat shall determine the form of receipt with the approval of the Collector.

16-F. If, after the payment of tax, the entertainment is not held on account of some extenuating or unavoidable circumstances, the amount of tax paid shall be refunded to the payee, if he applies for such refund within 48 hours of payment.

SCHEDULE.

(Rule 11.)

Rate of tax during fairs and festivals.

(1) Re. 0–4–0 for the period of fair or festival for every plot measuring not more than 9 sq. ft. occupied for the purpose of a shop or booth or stall or for doing business of any kind and 6 pies for every additional plot of 9 sq. ft. or part thereof.

(2) Re. 1–0–0 per guntha per day for space taken up for a cinema, circus or other entertainment, and for a portion of a guntha occupied the rate for one guntha shall be chargeable.

PART IV.

Octroi.

17. A panchayat shall, with the approval of the Collector, fix octroi limits and the number and location of octroi Nakas.

18. (1) A panchayat which decides to levy octroi shall levy it on all the goods specified in column 1 of the Schedule annexed to this Part which are imported into the octroi limits, for consumption use or sale therein and at the rates respectively specified in column 2 of the said Schedule:

Provided that where a panchayat was levying octroi on any of the said goods immediately before the date these rules are made the panchayat shall levy octroi in respect of these goods at the rates in force on the day immediately preceding the said date.

(2) The rates referred to in sub-rule (1) shall be subject to the maximum prescribed in Government Notification, General Department, No. S. 174/1, dated 18th December 1934.

Explanation.—For the purposes of this rule goods shall be deemed to be imported for consumption, sale or use into the octroi limits unless they are exported within three days of their import.

19. The octroi shall be paid at an octroi naka.

19-A. If octroi is not paid on demand at the Naka as provided in rule 19 above, the Naka Karkun shall unless there are any special reasons to the contrary, seize the goods on which the octroi is leviable or such part thereof as would be of sufficient value, to satisfy the demand and may detain the same. The procedure laid down in rule 50 of the Toll Rules (published at pages 226 to 227 of Part IV-c of the *Bombay Government Gazette*, dated 9th March 1944) for the disposal of the property seized for default in payment of the toll, by sale or otherwise, shall also apply to the disposal of the property seized and detained for non-payment of octroi.

Refunds of Octroi.

19-B. An importer of the goods on which octroi has been paid shall be entitled to a refund of the amount so paid on export thereof outside the octroi limits without breaking bulk.

19-C. Refunds of the octroi paid under these rules shall be debited to the funds of the village panchayat.

19-D. Unless there are reasons to believe that a claim for refund is not admissible the Sarpanch or in the absence of the Sarpanch the Deputy Sarpanch shall sanction refunds provided that—

(i) an application in writing is made to the Sarpanch within three days from the date of the export, and

(ii) the claimant produces a receipt signed by the Naka Karkun, which was given to him at the time the octroi was paid.

19-E. An appeal from the order of the Sarpanch or Deputy Sarpanch rejecting the claim for a refund shall lie to the panchayat whose decision shall be final.

20. A receipt shall be given for the payment made. The receipt shall be in such form as may be determined by the panchayat.

SCHEDULE.

(Rule 18.)

Goods.	Rate of Tax. Rs.	a.	p.	
(*a*) *Building materials*—				
Bricks	1	0	0	per 1,000 Bricks.
Corrugated Iron Sheets ...	0	6	0	per Bombay Maund.
Manglore, Deshi and flooring tiles.	1	9	0	per Rs. 100 *ad valorem*.
Cement and cement products.	1	9	0	per Rs. 100 *ad valorem*.
Lime, lime stone, chho and sagole.	1	9	0	Do.
Sand and gravel for building purposes.	1	9	0	Do.
Iron, steel or materials made of iron or steel, for building purposes.	2	0	0	Do.
Paints and painting oils of all kinds.	1	9	0	Do.
Timber	1	9	0	Do.
(*b*) *Cloth*—				
Cotton	1	9	0	Do.
Silk	2	0	0	Do.
Woollen	2	8	0	Do.
Yarn, cotton silk, artificial silk and woollen.	0	12	6	Do.
(*c*) Soft-Coke and hard Steam Coal.	0	4	0	per ton.
	0	8	0	per ton.
(*d*) Confectionery and sweets of all kinds.	1	9	0	per Rs. 100 *ad valorem*.
(*e*) Cocoanut and copra ...	0	12	6	Do.
(*f*) Cutlery and hardware ...	2	0	0	Do.
(*g*) Cotton and other oil seeds ...	0	2	0	per B. Maund.
(*h*) Hosiery—cotton, silk or woollen (including caps and ready-made clothes).	2	0	0	per Rs. 100 *ad valorem*.
(*i*) Kerosene	0	3	0	per tin.
(*j*) Betel-nuts and dates ...	1	9	0	per Rs. 100 *ad valorem*.

Goods.	Rate of Tax.
(*k*) *Oils*—	
Cocoanut Oil	Rs. a. p.
Groundnut Oil	
Sweet Oil	0 4 0 per Rs. 100 *ad valorem.*
Seassamum Oil	
Castor Oil	
(*l*) Cigars, cigarettes and Biris ...	1 9 0 Do.
(*m*) *Other articles*— Kariana, including dried Chillis, garlic, onion, gum Haldar, Singoda, Spices, etc.	0 2 0 per Bombay Maund.
(*n*) Matches	
Snuff	0 12 6 per Rs. 100 *ad valorem.*
Soaps	
(*o*) Sugar of all kinds	
Sugar preparations... ...	6 6 0 per Bombay Maund.
Gul and jaggery	
(*p*) Tea, Coffee, Coco	1 9 0 per Rs. 100 *ad valorem.*

Note 1—(*Exemptions*)—

(1) All Government stores or stores of Local Bodies (for local fund purposes),

(2) The personal effects of Government servants or servants of local bodies,

(3) Hand-spun and hand-woven Khaddar,

shall be exempt from the payment of octroi duty.

Note II.—In case of disagreement as to the amount of octroi duty payable by the importer of goods imported within the octroi limits, the Nakedar in charge of the Octroi Naka shall cause the importer to take the goods before the Sarpanch, or any other Panchayat servant duly authorised in this behalf, for the settlement of the duty to be paid.

PART V.

Tax on marriages, adoptions and feasts.

21. (1) A panchayat which decides to levy a tax on marriages, adoptions and feasts shall levy it according to the Classes and at the rates respectively specified in the Schedule annexed to this Part :

Provided that where a panchayat was levying such tax immediately before the date on which these rules are made, the panchayat shall levy the tax at the rates in force on the day immediately preceeding the said date.

(2) The class in which a marriage, adoption or feast falls for the purpose of the said Schedule shall be determined by the panchayat. Any person dissatisfied with the classification made by the panchayat may appeal to the Mamlatdar whose decision shall be final.

(3) The rates specified in sub-rule (1) shall be subject to the maximum prescribed in Government Notification, General Department, No. S. 174 (1), dated 18th December 1934, as amended by Government Notification, General Department, No. S. 174/1, dated 23rd February 1943.

22. (1) A person celebrating a marriage in the village, whether as parent or guardian or otherwise shall give at least three days before the celebration, intimation theoreof, to the Sarpanch together with information as to the expenditure proposed to be incurred on the marriage.

(2) A person adopting a child in the village shall give at least three days before the adoption, intimation thereof together with information as to the value of the adopter's property at the date of adoption.

(3) A person giving a feast in the village other than a feast given on the occasion of a marriage or adoption, shall give, at least three days before the feast, intimation thereof together with information as to the amount of expenditure proposed to be incurred on the feast.

23. The person required to give intimation in rule 22 shall pay the tax leviable under rule 21.

SCHEDULE

(Rule 21.)

	Rate of tax.		
	Rs.	a.	p.
(*A*) *Marriage*—Class—			
(1) On which it is proposed to incur an expenditure exceeding Rs. 1,000	5	0	0
(2) On which it is proposed to incur an expenditure exceeding Rs. 500 but not exceeding Rs. 1,000	2	0	0
(3) On which it is proposed to incur an expenditure exceeding Rs. 200 but not exceeding Rs. 500	1	0	0
(4) On which it is proposed to incur an expenditure exceeding Rs. 100 but not exceeding Rs. 200	0	8	0
(*B*) *Adoption*—Class—			
(1) In which the value of the property of the person making the adoption exceeds Rs. 5,000 at the date of adoption	5	0	0
(2) In which the value of the property of the person making the adoption exceeds Rs. 2,000 but does not exceed Rs. 5,000 at the date of adoption	2	0	0
(3) In which the value of the property of the person making the adoption exceeds Rs. 1,000 but does not exceed Rs. 2,000 at the date of adoption	1	0	0
(4) In which the value of the property of the person making the adoption exceeds Rs. 500 but does not exceed Rs. 1,000 at the date of adoption	0	8	0

	Rate of tax. Rs.	a.	p.
(C) *Feasts*—Class—			
(1) On which it is proposed to incur an expenditure exceeding Rs. 500	3	0	0
(2) On which it is proposed to incur an expenditure exceeding Rs. 250 but not exceeding Rs. 500	2	0	0
(3) On which it is proposed to incur an expenditure exceeding Rs. 100 but not exceeding Rs. 250	1	0	0
(4) On which it is proposed to incur an expenditure exceeding Rs. 50 but not exceeding Rs. 100	0	8	0

PART VI.

General Sanitary Cess.

24. In this Part unless there is anything repugnant in the subject or context—

(*i*) "Cess" means the general sanitary cess;

(*ii*) "House" means any building, or set of buildings within the same enclosure and used by the same occupier;

(*iii*) "Occupier" includes a person in actual possession of a house whether as owner, agent of the owner or tenant; and

(*iv*) "Owner" includes a person who receives or is entitled to receive rent of the house if the house is let.

25. (1) A Panchayat which decides to levy the cess shall levy it on all houses which are inhabited or occupied within the limits of the village at the rate specified in the Schedule annexed to this Part:

Provided that where a panchayat was levying such cess immediately before the date on which these rules are made, the Panchayat shall levy the cess at the rates in force on the day immediately preceding the said date:

Provided further that—

(*a*) Lands and buildings belonging to Local Boards, Municipalities, the Municipal Corporation for the City of Bombay and Panchayats, and used for public purposes and not used or intended to be used for purposes of profit;

(*aa*) Lands and buildings belonging to Government, whether or not used or intended to be used for purposes of profit, but not including lands and buildings in respect of which a railway administration is liable to pay tax or a sum in lieu thereof in virtue of a notification under section 3 of the Railway (Local Authorities Taxation) Act, 1941,

shall be exempt from the payment of the tax under this part.

(2) The rates referred to in sub-rule (1) shall be subject to the maximum prescribed in Government Notification, General Department, No. S. 174 (1), dated 18th December 1934, as amended from time to time.

26. The cess shall be leviable for the year beginning with 1st April and ending on 31st March. If the cess comes into force on any day other than the 1st April, it shall be leviable by the quarter ending on the 1st July, 1st October, 1st January and 1st April next following and thereafter by the year.

27. (1) The cess shall be primarily leviable from the actual occupier of the house if he is the owner of the house.

(2) If the house is not occupied by the owner the cess shall be primarily leviable from—

(*a*) the lessor, if the house is let;
(*b*) the superior lessor, if it is sub-let;
(*c*) the person in whom the right to let the same vests, if it is unlet.

(3) The failure to recover any sum due on account of the cess, from the person from whom it is primarily leviable, there may be recovered from the occupier of any part of the house in respect of which the cess is due such portion of that sum as the Sarpanch decides to be proportionately leviable in respect of that part of the house.

SCHEDULE.

(Rule 25.)

Rate of Cess.

Annas 4 per annum per hundred rupees of the capital valuation of the house where the valuation does not exceed Rs. 1,500 or annas 4 per annum per Rs. 3 of the annual letting value of the house where the value does not exceed Rs. 45

and

Rs. 4 per annum where the capital valuation of the house exceeds Rs. 1,500 or Rs. 4 where the annual letting value of the house exceeds Rs. 45 :

Provided further that, in the Bombay Suburban district such cess may be levied at 2½ per cent. per annum of the annual letting value of the house, where such value exceeds Rs. 160.

Explanation.—For the purposes of this Schedule "capital valuation" and "annual letting value" shall mean the capital valuation and annual letting value as entered in the assessment list prepared for the purpose of the levy of the tax on owners or occupiers of houses and land within the village under section 89 (*1*) of the Act.

PART VII.

Special Sanitary cess.

28. In this Part, unless there is any thing repugnant in the subject or context—

(*i*) "Cess" means the special sanitary cess.

(*ii*) "Family" means the body of persons living and messing together in one house, including visitors, guests and servants.

(*iii*) The words "House" and "owner" have the same meaning as in Part VI of the rules.

29. (1) A Panchayat, which decides to levy the cess, shall levy it at any rate, not exceeding the rate specified in the schedule attached to this part, on each privy or latrine attached to a house, or on each family using such privy or latrine :

Provided that where a Panchayat was levying such cess immediately before the date on which this amendment comes into force, the panchayat shall levy cess at the rates in force on the day immediately preceding the said date, until such time as the cess is enhanced, subject to the maxima prescribed in the schedule annexed hereto.

SCHEDULE.

(Rule 29).

Name of District.	Name of Village Panchayats.	Rate specified under rule 29.
Bombay Suburban District	All Village Panchayats.	Rs. 24 per annum per privy or latrine, or Rs. 24 per annum per family for a Privy or Latrine and Rs. 12 for an additional Privy or Latrine used for the same family.
All other Districts ...	All Village Panchayats.	Rs. 12 per annum per Privy or Latrine, or Rs. 12 per annum per family for using a Privy or Latrine, and Rs. 6 for each additional privy or latrine used by the same family.

(2) The rates referred to in sub-rule (1) shall be subject to the maximum prescribed in Government Notification, General Department, No. S. 174/1, dated the 18th December 1934, as amended from time to time.

30. No cess shall be levied under rule 29 unless and until the Panchayat has—

(*a*) made provision for the cleansing of the privy or latrine by manual labour or for conducting or receiving the sewage thereof into the panchayat sewers ;

(*b*) issued either severally to the persons to be charged or generally to the inhabitants of the village or part of the village to be charged with the cess, one month's notice of the intention of the panchayat to make such provision and to levy the cess.

31. The cess shall be leviable by the year beginning with the 1st April and ending with the 31st March. If the cess comes into force on any date other than the 1st April, it shall be leviable by the quarter ending the 1st July, 1st October, 1st January and 1st April next following and thereafter by the year.

32. The cess shall be recoverable from the owner of the house to which the privy or latrine is attached and in default of payment by him from any persons actually using the privy or latrine at any time during the period for which the cess is due. When a privy or latrine is used by more than one family and the rate of the cess is fixed per family it should be recoverable from the head of each family using the privy or latrine.

33. Where any privy or latrine has ceased to be used as such for a period of not less than three months, the panchayat may refund the whole or any portion of the amount of the cess levied in respect of the privy or latrine for the said period :

Provided that no refund shall be granted unless notice in writing of the fact that the privy or latrine has ceased to be used has been given to the panchayat, provided further that no refund shall be granted in respect of any period previous to the date of the delivery of such notice.

SCHEDULE.

(Rule 29).

Rate of Cess.

Name of District.	Name of Village Panchayats.	Rate specified under rule 20.
Bombay Suburban District.	All Village Panchayats ...	Rs. 12 per annum per privy or latrine or Rs. 12 per annum per family for a privy or latrine and Rs. 6 for an additional privy or latrine used for the same family.
All other Districts ...	All Village Panchayats ...	Rs. 6 per annum per privy or latrine or Rs. 6 per annum per family for using a privy or latrine and Rs. 3 for each additional privy or latrine used by the same family.

PART VIII.

Market and Weekly Bazaar fees.

34. (1) A Panchayat which decides to levy as fee on markets or a fee on weekly bazaars, as the case may be, shall levy it at the rates specified in the Schedule annexed to this Part.

(2) The rates referred to in sub-rule (1) shall be subject to the maximum prescribed in Government Notification, General Department, No. S. 174 (1), dated the 18th December 1934, as amended by Government Notification No. S. 174 (1), dated the 23rd February 1943.

35. The Panchayat shall with the approval of the District Magistrate determine the limits of the area within which the market fee shall be levied, and the limits of the area within which the bazaar fee shall be levied.

36. No person shall sell any commodity or occupy any open space or plot of land for the purpose of a shop, booth or stall or for doing business of any kind either in a market or weekly bazaar, as the case may be, within the limits fixed under rule 35, without obtaining a permit from the panchayat on payment of the fees leviable under rule 34.

37. The permit in the case of a market shall be valid for the period for which it is issued and in the case of weekly bazaar, for the bazaar day specified in the permit.

38. The person authorised by the Panchayat shall receive payment of the fee, give a receipt for the same and thereupon issue a permit.

39. The Panchayat shall determine the form of receipt and of the permit granted under rule 38.

40. No remission or refund of the fee once recovered shall be made.

41. These rules shall not apply to a market established for the purposes of the Bombay Agricultural Produce Markets Act, 1939.

SCHEDULE.

(Rule 34.)

Rate of Fee.

2 annas per day or Rs. 3 per month, for every plot measuring not more than 9 square feet and

1 anna per day or Rs. 1-8-0 per month, for every additional plot of 9 suqare feet or part thereof.

6 pies per basket or 3 annas per bag, or 12 annas per cart load (16 Bombay Maunds), of any commodity brought to the market or weekly bazaar for the purposes of trade.

PART IX.

Toll on Vehicles and Animals.

42. In this Part—

(*a*) "Schedule" means the schedule annexed to this Part;

(*b*) "Vehicle" means a vehicle specified in column 1 of the Schedule but does not include a motor vehicle or a trailer.

43. (1) A Panchayat which decides to levy a toll on animals or vehicles specified in column 1 of the Schedule entering any fair or festival area shall levy it at the rates specified against them in column 2 of the Schedule.

(2) The rates referred to in sub-rule (1) shall be subject to the maximum prescribed in Government Notification, General Department, No. S. 174(1), dated the 18th December 1934, as amended by Government Notification No. S. 174 (1) dated the 10th January 1944.

44. The Panchayat shall with the previous approval of the district local board and the Collector determine the limits of any fair or festival area for the purpose of levying a toll under rule 43.

45. No toll shall be levied under rule 43 more than once in a day (day being counted from midnight to midnight).

46. No toll shall be levied on an animal if toll has been levied on a vehicle drawn by such animal.

47. No toll shall be payable in respect of—

(*i*) a vehicle or animal carrying the kit of Government servants, or the members and servants of the panchayat on duty in the fair or festival area;

(*ii*) carts of cultivators of the village carrying manure, agricultural produce of their fields, or implements; and

(*iii*) animals of the inhabitants of the village in which the fair or festival is held except those that are brought for the purpose of sale into the fair or festival area.

(*iv*) a vehicle owned by Government or local bodies.

48. The toll shall be collected by such persons as may be authorised in that behalf and at such gates, nakas or checking stations as may be fixed for the purpose, by the panchayat. A table, legibly written or printed in the regional language of the district, showing the rate of the toll payable in respect of vehicles and animals shall be displayed in a conspicuous place in the vicinity of the gate, naka or checking station at which the toll is collected for the information of the public.

49. A receipt for payment of the toll should be given in such form as may be determined by the panchayat.

50. (1) In the case of non-payment on demand of the toll payable under this Part the person authorised to collect the toll under rule 48 may seize any animal or vehicle on which the toll is payable or any part of the burden of such vehicles or animal which is of sufficient value to satisfy the demand, and may detain the same. A list of the property seized together with a written notice that it shall be sold in the manner specified in the notice shall be furnished to the person in possession of the property seized (hereinafter referred to as the defaulter). A copy of the notice shall at the same time be given to the Sar Panch.

(2) When any property seized under sub-rule (1) is subject to speedy and natural decay, or when the expenses of keeping it are likely to exceed the amount of the toll payable by the defaulter the person or persons seizing the property shall inform the defaulter and also the Sarpanch or in his absence the Deputy Sarpanch that it will be sold at once. The Sarpanch or Deputy Sarpanch, as the case may be, shall then sell it or cause it to be sold unless the amount of toll demanded be forthwith paid.

(3) If at any time before the sale begins, the defaulter pays at the office of the panchayat the amount of all the expenses incurred by the person collecting the toll and of the toll payable by him, the property seized under sub-rule (1) shall forthwith be delivered to him.

(4) If no such payment is made, the sale shall be effected and the proceeds of the sale shall be applied in the payment of the toll and expenses incidental to the seizure, detention and sale and the surplus, if any, shall be paid to the defaulter.

51. No toll under this Part shall be levied unless it has been approved by the District Local Board and sanctioned by the State Government.

SCHEDULE.

(Rule 43.)

Rate of Toll on Vehicles and Animals.

	Rate of toll. Rs.	a.	p.
Vehicles—			
(1) On every vehicle drawn by two or more animals (e.g. carriage, tonga, eka)	0	2	0
(2) On every such vehicle drawn by one animal	0	1	0
(3) On every bicycle	0	1	0

Animals—	Rate of toll. Rs. a. p.
(4) On every elephant	0 4 0
(5) On every camel	0 2 0
(6) On every buffalo, horse, mare, gelding, pony, mule, bullock, cow, heifer	0 1 0
(7) On every colt, filly, calf, ass, sheep, goat, dog, pig ...	0 0 6

PART X.

Tax on shops and hotels.

51. Unless there is anything repugnant in the subject or context—

(*i*) "Shop" means and includes any premises, where goods are sold either by retail or wholesale, or both, or where services are rendered to customers, and includes offices, godowns, store-rooms and ware-houses for such shops, whether attached to them or otherwise, but does not include a hotel, restaurant, eating house or commercial establishment;

(*ii*) "Hotel" means and includes an eating house and a restaurant where articles of food or drinks or both are served;

(*iii*) "proprietor" means and includes the owner, manager, agent, or any other person in charge of such shop or hotel, for the time being.

52. A Panchayat, which decides to levy a tax on shops or hotels, shall levy it at the rates specified in the schedule annexed to this part:

Provided that shops opened and run by Panchayats, Local Bodies or Government shall be exempt from the payment of the tax.

53. The tax shall be payable by the proprietor of the shop or hotel and be levied for the whole year beginning from 1st April and ending 31st March, even if such shop or hotel is opened for a part of the year; and it shall be payable before 15th April or within 15 days of the opening of a new shop or hotel.

54. The Secretary of the Panchayat, or the person authorised by the Panchayat in this behalf, shall receive the payment of the tax and give a receipt for the same.

55. The Panchayat shall determine the form of the receipt with the approval of the Collector.

SCHEDULE.

(Rule 52.)

	Rate of tax.
1. Shops ...	Rs. 5 per annum.
2. Hotels ...	Rs. 10 per annum.

PART XI.

Tax on factories and mills.

56. Unless there is anything repugnant in the subject or context—

(*i*) "Factory or Mill" means and includes premises where machinery is run by steam, oil or electric power, for any purpose other than a domestic or agricultural purpose;

(*ii*) "proprietor" means the owner, manager, agent or any other person in charge of such factory or mill for the time being.

57. A Panchayat, which decides to levy a tax on a factory or mill, shall levy it at the rates specified in the schedule annexed to this part.

58. The tax shall be payable by the Proprietor of the factory or mill, and be levied for the whole year beginning from 1st April and ending 31st March, even if such factory or mill is opened for a part of the year; and it shall be payable before 15th April or within 15 days of the opening of a new factory or mill.

59. The Secretary of the Panchayat, or the person authorised by the Panchayat in this behalf, shall receive the payment of the tax, and give a receipt for the same.

60. The Panchayat, with the approval of the Collector, shall determine the form of receipt.

SCHEDULE.

(Rule 57.)

	Rate of tax.
1. Factories or mills run by steam or oil ...	Rs. 25 per annum.
2. Factories or mills run by electric power ...	Rs. 50 per annum.

S. 108 (1) (n1) & (n2).

G. N., G. D., No. S. 174/12/1, dated 3rd January 1940 (B. G., Pt. IV-B, p. 33).

In exercise of the powers conferred by clauses (*n1*) and (*n2*) of sub-section (*1*) of section 108 of the Bombay Village Panchayats Act, 1933 (Bom. VI of 1933), the Government of Bombay is pleased to make the following rules, namely :—

Rule under clause (n1) of sub-section (1) of section 108 of the Bombay Village Panchayats Act, 1933, prescribing the form of writ of demand to be presented to the defaulter under sub-section (2) of section 91.

The writ of demand to be presented to the defaulter, under sub-section (*2*) of section 91, shall be in the form appended hereto, namely :—

"FORM OF WRIT OF DEMAND.

To

A.B.

residing at

Take notice that the Village Panchayat of demands from the sum of due from on account of (here describe the nature of the tax or sum due to a panchayat under the Act or rules or by-laws, as the case may be, in respect of) for the period of commencing on the day of 19 and ending on the day of 19 and that if within thirty days from the date of service of this writ, the said sum,

together with Rs. As. Pies as fee for this writ of demand is not paid into the Village Panchayat Office at or sufficient cause for non-payment is not shown to the satisfaction of the Village Panchayat, a warrant of distress will be issued for the recovery of the same, with costs.

Dated this day of 19 .

(Signed)

By order of the Village Panchayat of

Rules under clause (n2) of sub-section (1) of section 108 of the Bombay Village Panchayats Act, 1933 (Bom. VI of 1933), prescribing the form of Warrant, the method of attachment, auction and sale of the defaulter's moveable property under section 91 (3).

1. If the person liable for the payment of the sum for which a writ of demand has been served on him does not, within thirty days from the date of service of such writ of demand either,

(1) pay the sum demanded in the writ, or

(2) show sufficient cause to the satisfaction of the Village Panchayat for the non-payment of the sum demanded,

a warrant of distress in Form A appended to these rules shall be issued and served on him.

2. Every such warrant shall be signed either by the Sarpanch or the deputy Sarpanch and shall be executed by such officer of the panchayat as the panchayat may authorise in this behalf.

3. The officer authorised to execute the warrant under rule 2 shall distrain, wherever found, any goods or chattel of the person named in the warrant as defaulter, subject to the following conditions and exceptions, *viz.* :—

(*a*) The following property shall not be distrained, namely :—

(1) the necessary wearing apparel, cooking vessels, beds and bedding of the defaulter, of his wife and children and such personal ornaments as, in accordance with religious usage, cannot be parted with by any woman,

(2) the tools of artizans, and

(3) if the defaulter is an agriculturist his implements of husbandry, seed, grain and such cattle as may be necessary to enable him to earn his livelihood.

(*b*) The property distrained shall be as nearly as possible equal in value to the amount recoverable under the warrant, and if any property has been distrained which in the opinion of the person authorised to sign the warrant under rule 2 should not have been so distrained it shall forthwith be returned to the person in whose possession it was at the time of distraint.

4. The officer authorised under rule 2, to execute the warrant of distress issued under rule 1, shall forthwith make an inventory of the goods and chattels which he has seized under such warrant and shall at the same time give a written notice in

Form B appended to these rules to the person in whose possession it was at the time of seizure, that the said goods and chattels shall be sold if he fails to pay within seven days from the day of the date of the notice, into the office of the Village Panchayat the amount recoverable under the notice together with the cost of recovery :

Provided that if after the property is distrained and before it is removed, the sum due by the defaulter together with all costs incidental to the service of writ, warrant and distress of the property are paid, the officer authorised to issue the warrant may suspend or discharge the warrant.

5. A copy of the notice given under rule 4 shall be also affixed on the Village Panchayat Office.

6. The goods and chattels seized shall, after the expiry of the period named in the notice served under rule 4, be sold by the Village Panchayat by public auction held at the Village Panchayat Office :

Provided that no servant or office bearer of the Village Panchayat shall be permitted to bid at such auction.

7. The surplus, if any, of the sale-proceeds of the distrained goods after satisfying the claims of the Village Panchayat shall be credited to the Village Panchayat fund, but if the same be claimed by an application made in writing to the Village Panchayat within one year from the date of the sale, a refund thereof shall be made to the person in whose possession the goods and chattels were at the time of the distraint.

FORM A.

Form of Warrant of Distress.

(*Rule 1.*)

(here insert the name of the officer charged with the execution of the warrant).

Whereas A. B. of village has not paid, or shown sufficient cause to my satisfaction for the non-payment of the sum of Rs. due for the tax/fee mentioned in the margin for which a writ of demand was served on him/her on the 19 ;

And whereas thirty days have elapsed since the service on him/her of the writ of demand for the same ;

This is to command you to distrain the goods and chattels of the said A. B. to the amount of Rs. , being the amount due from him as follows :—

	Rs.	a.	p.
On account of the said tax/fee			
For service of writ of demand			
Total ..			

and forthwith to certify to me, together with this warrant, all particulars of the goods distrained by you thereunder.

Dated this day of 19 .

(Signed)

Sarpanch (or deputy sarpanch, as the case may be.)

FORM B.

FORM OF INVENTORY AND NOTICE.

(*Rule 4.*)

To

A. B. residing at

Take notice that I have this day distrained the goods and chattels specified in the inventory beneath this, for the value of due for the the tax/fee mentioned in the margin, together with Rs. due as fee for service of writ of demand and that unless within seven days from the day of the date of this notice you pay into the office of the Village Panchayat, at the said amount together with the cost of recovery, the said goods and chattels will be sold.

Dated this day of 19 .

(Signature of the officer executing the warrant).

Inventory.

(Here state particulars of goods and chattels distrained.)

G. N., G. D., No. S. 174/12/(3), dated 12th February 1940.

S. 108 (1) (o)

IN excercise of the powers conferred by clause (*o*) of sub-section (*1*) of section 108 of the Bombay Village Panchayats Act, 1933 (Bom. VI of 1933) (hereinafter referred to as "the said Act"), the Government of Bombay is pleased to make the following rules, namely :—

1. *Writs of demand.*—The fee for every writ of demand issued under sub-section (*2*) of section 91 of the said Act shall be chargeable at the following rate, namely :—

		Rs.	a.	p.
(1)	When the amount demanded does not exceed Rs. 5 ...	0	1	0
(2)	When the amount demanded exceeds Rs. 5 but does not exceed Rs. 25	0	2	0
(3)	When the amount demanded exceeds Rs. 25 but does not exceed Rs. 100	0	4	0
(4)	When the amount demanded exceeds Rs. 100, Re. 0-4-0 for the first Rs. 100 and for every additional amount of Rs. 25 or part thereof	0	1	0

2. *Distress Warrants.*—The fee for every distress made under sub-section (*3*) of section 91 shall be chargeable at the rate of two annas for every amount of Rs. 5 or part thereof for which the distress is levied.

3. *Costs of maintaining live-stock seized.*—The costs of maintaining any live-stock seized under sub-section (*3*) of section 91 of the said Act shall be chargeable at the following rate, namely :—

	Rs.	a.	p.	
(1) For every elephant	0	8	0	per day.
(2) For every camel or buffalo	0	6	0	,, ,,
(3) For every horse, mare, gelding, pony, bull, bullock or cow	0	4	0	,, ,,
(4) For every colt, filly, calf, heifer, mule or ass ...	0	2	0	,, ,,
(5) For every ram, ewe, pig, bird, sheep, lamb, goat or kid	0	1	0	,, ,,

Explanation.—For the purposes of this rule, a colt or a filly shall be deemed to become a horse or mare, when it has completed its three years of age and a heifer shall be deemed to become a cow when it bears a calf.

[1]Ss. 109 and 19

G. N., G. D., No. 55, dated 7th March 1922 (B. G., Pt. I, p. 429).

Government are pleased to sanction, under section 13 of the Village Panchayats Act, the following rules[2] relating to procedure at meetings of Panchayats :—

1. The Panchayat shall hold its meetings in the village chavdi or any other place to which the public may have a free access. An ordinary meeting shall be held on any day in the first week of the month to be fixed by the Sarpanch. A special meeting may be called by the Sarpanch on his own accord or upon the request of any two members of the Panchayat or when called upon by the President, District Local Board, for any special purpose, within fifteen days from the date of receipt of such requisition.

2. Three clear days' notice of an ordinary general meeting and at least one clear day's notice of a special meeting specifying the time and place at which such meeting is to be held and the business to be transacted thereat, shall be circulated to the members and posted up at the village chavdi.

3. No business shall be transacted at any meeting unless a majority of the members are present from the beginning to the end of such meeting. If there is no quorum the Sarpanch shall adjourn the meeting to such time as he thinks proper. No quorum will be necessary at an adjourned meeting provided due notice of such adjourned meeting has been given to all the members.

4. The Sarpanch shall preside at meetings. In his absence the other Panchas present shall choose a chairman for that meeting.

5. The chairman shall put questions to the vote. Each members shall have one vote only, but the chairman shall have an additional or casting vote in the event of an equality of votes.

[1] These sections correspond to section 13 of Bom. IX of 1920.

[2] These rules made under Bombay Act, IX of 1920 shall, so far as they are not inconsistent with the provisions of Bom. VI of 1933, remain in force unless and until superseded by fresh bye-laws framed by the District Local Board concerned under section 109 of Bom. VI of 1933.

6. The chairman may adjourn meetings with the consent of the majority of members present.

7. The proceedings of each meeting of the Panchayat shall be recorded in vernacular or in any language approved by the Collector in a bound book. In this book shall be entered the names of the members present at each meeting, the decisions arrived at, and in the case of any decision not being unanimous, the names of the members forming the majority and minority. The proceedings shall be signed by the Sarpanch or Chairman appointed for the meeting and by the members present at the meeting. A copy of the proceedings shall be submitted to the President of the District Local Board.

G. N., G. D., No. 55-B., dated 26th May 1922 (B. G., Pt. I, p. 1224). [1]Ss. 109 and 28.

In exercise of the power vested in them in section 20 (2) of the Village Panchayats Act, Government are pleased to sanction the following rules[2] relating to supervision of labour employed by Local Boards on works within the village:—

1. The Village Panchayat may form a Works Committee every year if necessary, to supervise the labour employed by the Local Board on works within the village. The Works Committee shall consist of three members, one of whom shall be the Sarpanch.

2. The members of the Panchayat or of the Works Committee if formed shall—

(*a*) assist in securing labourers for works and arrange for the transport of materials to the site of works at reasonable rates,

(*b*) see that the work is being carried out efficiently and economically,

(*c*) inspect at least once a week all works carried out departmentally by the Local Board while in progress and ascertain whether they are executed in accordance with duly sanctioned plans and estimates,

(*d*) check at least once a week the muster rolls and measurement books and countersign payments made in their presence.

3. They shall also inspect at least once a fortnight works given on contract, see that they are executed according to sanctioned plans and estimates and report the defects if any to the President of the District Local Board or Taluka Local Board concerned.

4. They shall occasionally inspect every work in progress and report the result of inspection to the President of the District Local Board or Taluka Local Board concerned.

5. The Committee should see that the material received is of the quality required and the quantity received is not short of that indented for.

6. The President or Vice-President of the Taluka Local Board concerned shall supply the Village Panchayat with copies of the sanctioned plans and estimates for such works as are within its area, and shall issue necessary instructions to the Local Board Sub-Overseer or Maistry to see the Sarpanch whenever he visits these works.

---

[1] These sections correspond to section 20(2) of Bom. IX of 1920.

[2] These rules made under Bombay Act IX of 1920 shall, so far as they are not inconsistent with the provisions of Bom. VI of 1933 remain in force unless and until superseded by fresh bye-laws framed by the District Local Board concerned under section 109 of Bom. VI of 1933.

7. No payment shall be made for any work unless the Panchayat or the Works Committee have satisfied themselves as to the progress and the quality of the work and have certified to that effect.

8. A visitor's book shall be maintained at every work, in which the member or members of the Works Committee inspecting the work shall record their remarks regarding it.

S. 112 (1) **G. N., G. D., No. S. 174/1, dated 3rd June 1941 (B. G., Pt. I-A, p. 365).**

Amended by G. N., H. and L. G. D. No. S 174(1), dated 24th November 1948.

In exercise of the powers conferred by sub-section (*1*) of section 112 of the Bombay Village Panchayats Act, 1933 (Bom. VI of 1933), the Government of Bombay is pleased to authorise the Commissioners of Divisions to make rules under clause (*m*) of sub-section (*1*) of section 108 of the said Act, pescribing the rates at which, the manner in which and the exemptions subject to which the taxes specified in subsection (*2*) of section 89 of the said Act shall be leviable by the panchayats constituted for the areas within their respective jurisdictions, subject to the condition that the rates to be prescribed by the Commissioners in the case of any panchayat shall not be higher than the maxima rates laid down in the rules made under clause (*n*) of sub-section (*1*) of section 108 of the said Act and published in Government Notification, in the General Department, No. S. 174/1, dated the 18th December 1934.

S. 112 (1) **G. N., G. D., No. S. 174/10 (a), dated 8th November 1941 (B. G., Pt. I-A, p. 498).**

In exercise of the powers conferred by sub-section (*1*) of section 112 of the Bombay Village Panchayats Act, 1933 (Bom. VI of 1933), and in supersession of Government Notifications. General Department, No. 174/10 (*b*), dated the 13th September 1940 and the 3rd February 1941, the Government of Bombay is pleased to delegate to each Collector the power to make rules, not inconsistent with the rules made by Government, under clause (*el*) of sub-section (*1*) of section 108 of the said Act, prescribing the remuneration and conditions of service of the Secretaries of the panchayats in his district.

S. 112 (1) **G. N., H. & L. G. D., No. 2565/33-C, dated 20th January 1948 (B. G., Pt. IV-B, p. 61).**

In exercise of the powers conferred by sub-section (*1*) of section 112 of the Bombay Village Panchayats Act, 1933 (Bom. VI of 1933), the Government of Bombay is pleased to authorise all Collectors to exercise the power to make rules under clause(*b*) of sub-section (*1*) of section 108 of the said Act, in so far as such rules relate to the constitution for each panchayat of wards for the election of members.

S. 112 (1) **G. N., H. & L. G. D., No. S. 174(1), dated 13th July 1948 (B. G., Pt. IV-B, p. 473).**

In exercise of the powers conferred by sub-section (*1*) of section 112 of the Bombay Village Panchayats Act, 1933 (Bom. VI of 1933), the Government of Bombay is pleased to authorise the Collectors of Districts to make rules, under clause (*ml*) of sub-section (*1*) of section 108 of the said Act, prescribing under sub-section (*2A*) of section 89 of the said Act, any one of the taxes specified in sub-section (*2*) of the said section that shall be levied by the Panchayats constituted for the areas within their respective jurisdictions.

G. N., H. & L. G. D., No. S. 174/1 (b), dated 13th July 1948 (B. G., Pt. IV-B, p. 474). S. 112 (1)

In supersession of Government Notification, General Department No. S. 174/1(*a*) dated the 1st November 1940 and in exercise of the powers conferred by sub-section (*1*) of section 112 of the Bombay Village Panchayats Act, 1933 (Bom. VI of 1933), the Government of Bombay is pleased to authorise the Commissioners of Divisions to make rules under clause (*m*) of sub-section (*1*) of section 108 of the said Act prescribing the rate at which, the manner in which and the exemptions subject to which the tax upon the owners or occupiers of lands and houses under sub-section (*1*) of setion 89 of the said Act shall be leviable by the Panchayats constituted for the areas within their respective jurisdiction subject to the condition that the rate to be prescribed by the Commissioners in the case of any Panchayat shall not be lower than the minimum rate or higher than the maximum rate specified below, viz.—

	Minimum rate.	Maximum rate.
(*a*) for tax based on capital value of the lands and buildings.	Re. 0-4-0 per Rs. 100 of the capital value or fraction thereof.	Re. 0-8-0 per Rs. 100 of the capital value or fraction thereof.
(*b*) for tax based on letting value of the lands and buildings.	6¼ per cent. of the annual letting value.	15 per cent. on the annual letting value.

G. N., H. & L. G. D., No. 2565/33, dated 17th October 1949 (B. G., Pt. IV-B, p. 1970). S. 112 (1)

In exercise of the powers conferred by sub-section (*1*) of section 112 of the Bombay Village Panchayats Act, 1933 (Bom. VI of 1933), the Government of Bombay is pleased to authorise all the Assistant Collectors and the Deputy Collectors to exercise the powers to make rules under clause (*b*) of sub-section (*1*) of section 108 of the said Act, in so far as such rules relate to the constitution for each panchayat of wards for the election of members.

G. N., H. & L. G. D., No. S. 180, dated 7th November 1949 (B. G., Pt. IV-B, p. 2077). S. 112 (1)

In exercise of the powers conferred by sub-section (*1*) of section 112 of the Bombay Village Panchayats Act, 1933 (Bom. VI of 1933) the Government of Bombay is pleased to authorise the Divisional Commissioners to exercise the power to make rules under clause (*b*) of sub-section (*1*) of section 108 of the said Act in so far as the rules relate to the prescribing of the number of seats to be reserved for the representatives of Women, Muslims, Harijans or Backward Tribes on each Village Panchayat in the areas under their jurisdiction.

THE BOMBAY LIVE-STOCK IMPROVEMENT ACT, 1933 (BOM. XXII OF 1933).

G. N., R. D., No. 818/33, dated 19th September 1935 (B. G., Pt. IV, p. 842).

S. 23 Bombay Live-stock Improvement Rules, 1935.

In exercise of the powers conferred by section 23 of the Bombay Live-stock Improvement Act, 1933 (Bom. XXII of 1933), the Government of Bombay is pleased to make the following rules, namely :—

1. *Short title.*—These rules may be called the Bombay Live-stock Improvement Rules, 1935.

2. *Definitions.*—In these rules, unless there is anything repugnant in the subject or context—

(*i*) " the Act " means the Bombay Live-stock Improvement Act, 1933 ;

(*ii*) " castrate " means to perform an operation in accordance with these rules for the purpose of removing the reproductive power of a bull and the words " castrated " and " castration " shall be construed accordingly ;

(*iii*) " entire " means a male bull possessing full reproductive power.

(*iv*) " schedule " means a schedule appended to these rules ;

(*v*) " section " means a section of the Act ;

(*vi*) " village " means a village to which the Act is extended and in which the Act has been brought into force under section 2 ;

(*vii*) " panchayat " means a panchayat established under the Bombay Village Panchayats Act, 1933 ;

(*viii*) words and expressions not defined in these rules but defined in the Act shall have the meaning assigned to them in the Act.

3. *Limit of age beyond which unlicensed or uncastrated bull not to be kept.*—No person shall keep a bull which has attained the age of two years unless a licence has been granted in respect of such bull, or such bull has been castrated in accordance with the provisions of these rules, as the case may be.

4. *Application for licence.*—Where a person keeping a bull desires to retain such bull entire after it has attained the age of two years, such person shall, three months before the bull attains the age of two years, make an application for a licence in respect of such bull to the Live-stock Officer. The application shall state the name and address of the person who keeps such bull, the place where such bull is kept, and the marks, colour, height and other particulars of identification of such bull.

5. *Inspection of bull before grant of licence.*—On the receipt of such application, the Live-stock Officer shall inspect the bull and if the Live-stock Officer is not a qualified veterinary officer, may cause the bull to be inspected by a qualified veterinary officer as to its age and whether it is suffering from any defect or is affected with any disease mentioned in section 7 (*1*) (*b*) and (*c*).

6. *Grant of licence.*—If on inspection under rule 5, the Live-stock Officer is satisfied that the bull is not suffering from any defect or is not affected with any disease mentioned in section 7, the Live-stock Officer may grant a licence in respect of such bull in the form prescribed in Schedule II; and the Live-stock Officer shall ordinarily grant a licence for any such bull so as to provide that there shall be one such bull for every 60 cows in a village in the State of Bombay.

7. *Period of licence.*—The period for which a licence may be granted shall not exceed three years.

8. *Marking of licensed bulls.*—A bull in respect of which a licence has been granted shall be marked by means of tattooing in such manner as the Director of Agriculture may from time to time direct.

9. *Inspection by veterinary officer when compulsory.*—Before refusing to grant or revoking a licence in respect of a bull on any of the grounds specified in sub-section (*1*) of section 7, the Live-stock Officer, if he is not a qualified veterinary officer, shall, if so required by the person who keeps the bull, cause the bull to be inspected by a qualified veterinary officer free of charge, and the opinion of such veterinary officer shall be conclusive whether the bull is suffering from any defect or affected with any disease mentioned in section 7 (*1*) (*b*) and (*c*).

10. *Renewal of licence.*—Before the period of a licence in respect of a bull expires, the holder of such licence shall apply to the Live-stock officer for the renewal thereof. On such application the Live-stock Officer may renew the licence for a period not exceeding three years, provided that he is satisfied that the bull in respect of which the licence has been granted is not suffering from any defect or is not affected with disease mentioned in section 7.

11. *Transfer of licence.*—The holder of a licence may, with the previous consent in writing of the Live-stock Officer, transfer the licence to any person who shall have become the keeper of the bull. On such transfer, the Live-stock Officer shall make an endorsement on the licence stating the name of the person to whom the licence is transferred and the date up to which the said licence shall be in force.

12. *Notice of revocation of licence.*—When a Live-stock Officer revokes a licence in respect of any bull, he shall give the keeper of the bull notice in the form prescribed in Schedule III.

13. *Form of notice of castration.*—The notice of castration under section 7 shall be given in the form prescribed in Schedule IV.

14. *Castration.*—(1) Every bull directed to be castrated under section 11 or section 16 shall be effectively desexed.

(2) If a Live-stock Officer, not being a qualified veterinary officer, is not satisfied with the castration of any bull, he may cause the castration to be performed again by a qualified veterinary officer free of charge.

15. *Manner of inquiry under section 16.*—Before seizing a bull under sub-section (2) of section 16, the Live-stock Officer shall cause an inquiry to be made as to the ownership of the bull by the panchayat of the village in which the bull

is kept and, where no panchayat has been established for the village, by a committee consisting of the village officers and such other residents of the village, not exceeding three in number, as may be appointed by the Live-stock Officer in this behalf.

16. *Determination of costs of maintenance and sale of a bull.*—The amount of costs, charges or expenses specified in sub-section (2) of section 16 shall be fixed by the Live-stock Officer :

Provided that if the owner or other person who keeps the bull disputes the amount so fixed, such amount shall be determined by the panchayat of the village and, where no panchayat has been established, by a committee constituted in the manner prescribed in the preceding rule. The decision of the panchayat or the committtee, as the case may be, shall be final.

17. *Duties of the Live-stock Officer.*—It shall be the duty of the Live-stock Officer to exercise all or any of the powers conferred on him under the Act or the rules for the purpose of carrying into effect the purposes of the Act ; and, in particular, to provide that no bull which has attained the age of two years shall remain in any village unless a licence has been obtained in respect of such bull, or unless such bull has been castrated in the manner prescribed by these rules.

18. *Power of Live-stock Officer to enter premises.*—The Live-stock Officer shall have power to enter any premises or place where he has reason to believe that bulls are kept, between sunrise and sunset, for the purpose of performing any of the duties imposed on him by the Act or the rules :

Provided that the Live-stock Officer may before entering such premises or place give notice in writing to the owner or occupier of such premises or place in the form prescribed in Schedule I.

SCHEDULE I.

(*See* Rule 18.)

To

A.B. , residing at

Whereas I have reason to believe that you have kept $\frac{\text{on your premises}}{\text{in your place}}$ an entire $\frac{\text{bull}}{\text{bulls}}$ I hereby give you notice that I shall enter your $\frac{\text{premises}}{\text{place}}$ on * between † for the purpose of inspecting the said $\frac{\text{bull}}{\text{bulls}}$; you are hereby warned to keep the $\frac{\text{bull}}{\text{bulls}}$ ready for inspection and not to remove the $\frac{\text{bull}}{\text{bulls}}$ on the aforesaid date from the $\frac{\text{premises}}{\text{place}}$ until $\frac{\text{it is}}{\text{they are}}$ inspected by me.

Dated this the day of 19 .

*(Here state date.) †(Here state hours.)

SCHEDULE II.

(*See* Rule 6.)

Licence to keep a bull.

Mr. / Mrs. / Miss of is hereby granted a licence, subject to the provisions of the Bombay Live-stock Improvement Act, 1933 (Bom. XXII of 1933), and the Bombay Live-stock Improvement Rules, 1935, conferring upon him / her the privilege of keeping the bull described in the margin, for breeding purposes, in the village of , taluka , district , for the period from 19 to 19 both days inclusive subject always to the terms, conditions and restrictions hereinafter mentioned, namely :—

S. No. Tattoo No.

Name, if any, of bull—

Age—

Colour—

Height—

Marks—

Other particulars—

(1) The licence holder shall inform the Live-stock Officer of any illness, defect or deformity which is likely to render the bull unsuitable for breeding purposes.

(2) The licence holder shall not be entitled to any compensation for revocation of the licence.

(3) The licence holder shall submit the bull for inspection whenever required by any Live-stock Officer to do so.

(4) The licence-holder shall maintain the bull in good breeding condition to the satisfaction of the Live-stock Officer.

(5) The licence holder shall give benefit of the service of the bull to the cows of the village in which the bull is kept in preference to the cows of other villages.

(6) The licence holder shall give to the Live-stock Officer all information regarding the service rendered by the bull during the period of the licence.

(7) The licence holder shall give intimation to the Live-stock Officer when the licensed bull is sold or otherwise transferred.

Dated the day of 19 .

(Signed)

Live-stock Officer.

N.B.—(*a*) This licence may be renewed on the keeper satisfying the Live-stock Officer that the bull continues to be a good breeder and has been maintained in good breeding condition.

(*b*) This licence will be revoked for breach of any of the terms or conditions thereof.

SCHEDULE III.

(*See* Rule 12.)

To

A. B. , residing at

Whereas it has come to my notice that you keep a bull described in the margin

S. No. Tattoo No.

Name, if any, of bull—
Age—
Colour—
Height—
Marks—
Other particulars—

in respect of which a licence was granted to you on

And Whereas I am of the opinion that

A the bull appears to be

B there has been a breach of the terms or conditions of the licence inasmuch as †

I have under section 7 of the Bombay Live-stock Improvement Act, 1933, revoked the licence and I give you notice of the said revocation as required by sub-section (*4*) of the said section 7.

Dated this the day of 19 .

(Signed)

Live-stock Officer.

B.—A or B should be scored out where necessary.

* [Here state the condition according to clause (*a*), (*b*), or (*c*), as the case may be, of sub-section (*1*) of section 7.]

† (Here describe the breach.)

SCHEDULE IV.

(*See* Rule 13.)

To

A.B. , residing at

Whereas it has come to my notice that you $\frac{\text{own}}{\text{keep}}$ a bull described in the margin in respect of which

Name, if any, of bull :

Description :

a licence is $\frac{\text{not taken}}{\text{refused}}$ / $\frac{\text{revoked}}{\text{not renewed.}}$;

Now therefore in exercise of the powers conferred upon me by section 11 of the Bombay Live-stock Improvement Act, 1933, I give you notice that the said bull shall be castrated within one month from the date of the receipt of this notice and that on your failure to do so you shall be liable to be punished under section 14 of the said Act.

Dated this the day of 19

(Signed)

Live-stock Officer.

Note.—Castration shall be performed by officers of the agricultural or veterinary Departments free of charge.

THE BOMBAY TRADE DISPUTES CONCILIATION ACT, 1934 (BOM. IX OF 1934).

G. N., P. & R. D., No. 340/34, dated 12th January 1935 (B. G., Pt. I, p. 80).

Amended by G. N., P. & R. D., No. 340/34, dated 3rd May 1935.
Amended by G. N., P. & S. D., No. 1766/34, dated 10th June 1938.

S. 20. Bombay Trade Disputes Conciliation Rules, 1934.

In exercise of the powers conferred by section 20 of the Bombay Trade Disputes Conciliation Act, 1934 (Bom. IX of 1934), the Governor in Council is pleased to make the following rules for the purpose of giving effect to the provisions of the said Act :—

PRELIMINARY.

1. *Short title.*—These rules may be called the Bombay Trade Disputes Conciliation Rules, 1934.

2. *Definitions.*—In these rules, unless there is anything repugnant in the subject or context.

(*a*) "Act" means the Bombay Trade Disputes Conciliation Act, 1934.

(*b*) "Section" means a section of the Act.

3. *Form and manner of giving notice under section* 8.—The notice under section 8 shall be given in Form A appended to these rules and shall be served in the following manner :—

(*a*) Where a registered company is a party to a trade dispute, the notice shall be sent to the managing agent or the managing director of the company at the registered office of the company.

Provided that when such company has, before the issue of the notice, intimated in writing to the Chief Conciliator that the notice under this section should be served on some other officer in a Part A State or Part C State of such company, the notice shall be sent to such officer at such address as may be specified in the intimation.

(*b*) Where members of a registered trade union are a party to a trade dispute, the notice shall be sent to the registered office of the trade union.

(*c*) Where an owner, Manager or occupier of an industrial establishment is a party to a trade dispute the notice shall be sent by registered post addressed to him at such establishment.

(*d*) Where workmen who are not members of a registered trade union, and who have not made an application under clause (*a*) of section 7, are a party to a trade dispute, the notice shall be served on the Labour Officer, who shall communicate its contents to the workmen in such manner as seems best to him in the circumstances of each case.

(*e*) Except in cases provided in clauses (*a*) to (*d*), notice shall be sent by registered post to the address given by a party to a trade dispute in his application under clause (*a*) of section 7.

4. *Intimation of authorisation of an Officer by a Company.*—(*a*) Where an employer is a company registered under the Indian Companies Act, 1913, the managing agent or the managing director of such company may give written intimation to the Chief Conciliator that the company has authorised some other officer of the company residing in a Part A State or Part C State to represent it for the purposes of sub-section (*3*) of section 9.

(*b*) Such intimation shall contain the name, address and occupation of the officer authorised to represent the company.

(*c*) Such intimation shall be given to the Chief Conciliator at any time not later than twenty-four hours after notice under section 8 is given to such employer.

5. *Expenses of witnesses.*—(1) Expenses reasonably incurred by any person summoned to give evidence or produce a document before the Conciliator may be allowed by the Conciliator to such person according to the scale prescribed for witnesses summoned to give evidence in the Court of the Presidency Small Causes, Bombay.

(2) Any party to a trade dispute applying for the issue of a summons to any person required to give evidence or produce document before the Conciliator shall within a period to be fixed by the Conciliator and before a summons is issued, deposit with the Conciliator such sum of money as would, in the opinion of the Conciliator, be sufficient for the purpose of defraying the expenses of the person summoned.

(3) The expenses allowed in the case of a person summoned by the Conciliator on his own motion or at the request of the Labour Officer shall be borne by the State Government.

6. *Manner of maintaining record of conciliation proceedings and settlement.*—The records of conciliation proceedings shall be maintained in Form B appended to these rules.

FORM A.

(*See* Rule 3.)

Form of Notice to be given under section 8 of the Bombay Trade Disputes Conciliation Act, 1934.

Whereas under section 7 of the Bombay Trade Disputes Conciliation Act, 1934, an application has been made by _____ for the settlement of the Labour Officer has made a report to the Conciliator, a trade dispute in

And whereas I am satisfied that the dispute exists or is apprehended in

I hereby call upon you under the powers vested in me under sub-sections (*1*) and (*2*) of section 8 of the said Act, to appoint within days of the receipt of this notice delegates not exceeding in number to appear before me on your behalf to take part in the conciliation proceeding which will commence on the day of at

(Signed)

Dated Conciliator.

FORM B.

(*See* Rule 6.)

Form in which record of conciliation proceedings shall be maintained.

REFERENCE NO.

1. Name or names of firm or firms in which the trade dispute existed.

2. Names of parties and names of delegates, if any.

3. Date of the first day on which the workmen were absent from work through the trade dispute.

4. Total number of persons employed in the firm or firms in which the strike or lock-out has occurred or is apprehended.

5. Number of persons involved in the trade dispute—

   Directly ... ...

   Indirectly ... ...

6. Cause or object of the trade dispute.

7. Date when the trade dispute ended.

8. Result of the trade dispute ...

9. A brief description of the steps taken to bring about a settlement, giving the names of any organizations or persons assisting to bring about the settlement.

10. Method by which settlement was brought about.

NOTE.—When an agreement in writing has been arrived at between the parties to the trade dispute, a copy of the agreement should be attached to the record.

Signature or signatures of officer or officers concerned with the settlement of the trade dispute.

Date

THE BOMBAY DEVADASIS PROTECTION ACT, 1934 (BOM. X OF 1934).

G. N., R. D., No. 1015/33, dated 27th May 1936 (B. G., Pt. IV-A, pp. 547 to 550).

Amended by G. N., R. D., No. 1015/33, dated 15th December 1938.

S. 7. Bombay Devadasis Protection Rules, 1936.

In exercise of the powers conferred by section 7 of the Bombay Devadasis Protection Act, 1934 (Bom. X of 1934), the Governor in Council is pleased to make the following rules, namely :—

1. *Short title.*—These rules may be called the Bombay Devadasis Protection Rules, 1936.

2. *Definitions.*—In these rules—

(1) "Act" means the Bombay Devadasis Protection Act, 1934.

"Form" means a form appended to these rules.

(3) "Section" means a section of the Act.

3. *Notice of inquiry.*—When the Collector has reason to believe that any land is assigned as emoluments for the performance by a devadasi of any services as such, he shall appoint a day for holding an inquiry under section 6 and shall serve on the holder of the land a notice in Form A calling upon her to appear on the appointed day in person or by a duly authorised agent.

4. *Notice of inquiry how to be served.*—The notice under rule 3 shall be served either by tendering or delivering a copy thereof to the holder concerned or the agent of such holder, if any, or by affixing a copy thereof to some conspicuous place on the land concerned or some conspicuous part of the temple in which the service is performed.

5. *Manner of recording evidence.*—On the appointed day or on such other day to which the inquiry may from time to time be adjourned by him, the holder shall appear in person or by her duly authorised agent before the Collector and the Collector shall hold an inquiry in accordance with the provisions of section 193 of the Bombay Land Revenue Code, 1879, in the following matters :—

(1) whether the land is assigned for emoluments for the performance by a devadasi of any services as such ;

(2) what is the amount of rent payable in respect of the land on its release from the performance of such services ;

(3) if the holder has objected to the release of the land from the performance of such services, whether the holder was a devadasi on or before the 16th October 1934 ; and

(4) such other matters as he thinks relevant for the purposes of section 6.

6. *Issue of order after inquiry by Collector.*—(1) After such inquiry the Collector shall, if he is satisfied that the land is assigned as emoluments for the performance by a devadasi of any services as such, by order in writing, direct that the land shall be released from such liability, shall determine the rent due in respect of such land and shall direct that such rent shall be paid by the holder of the land, for the benefit of the deity, idol, object of worship, temple or religious institution or to the State Government as the case may be, or

(2) if the holder objects to the release of the land from the performance by her, of services as such or gives notice to the Collector in Form B and if the Collector is satisfied that the holder was a devadasi on or before the 15th October 1934, the Collector shall direct that the land be not released from the performance of such services and the rent be not payable under sub-rule (1) during the life time of the said holder.

7. *Determination of rent.*—In determining the amount of rent payable under rule 6 the Collector shall take into consideration the rent ordinarily paid by tenants of lands of similar description in the locality.

8. *Collector's order to be final.*—The determination of the amount of rent under rule 6 shall be final :

Provided that the Collector may, from time to time, if circumstances so require, revise the amount of rent so determined.

FORM A.

Form of Notice of Inquiry under sub-section (1) of section 6 of the Bombay Devadasis Protection Act, 1934 (Bom. X of 1934).

To

Whereas land comprised in Survey No. in the village of in the taluka of district is assigned as emoluments for the performance by a devadasi of services as such ;

Notice is hereby given that an inquiry will be held by me with a view to release the said land from liability to perform such services and to levy rent in lieu thereof.

(1) You are hereby required to attend before me either in person or by a duly authorised agent at my office at o'clock on the day of 19 at which place and time an inquiry into the matter will be made by me.

(2) You are hereby required to produce before me at the abovenamed time and place any documents or other evidence you may wish to adduce in the said inquiry.

(3) If you fail to attend in person or by a duly authorised agent in pursuance of this notice, the matter will be decided in your absence and you will not afterwards be entitled to be heard with respect thereto.

(4) You are further warned that if you wish to object to the release of the land from liability for performance by you of services as such, you shall have to give me notice in Form B and you shall have to prove to my satisfaction on the said date and at the said place that you have been a devasasi on or before the 15th day of October 1934.

Dated

Place

Collector of

FORM B.

Form of Notice to be given under the Proviso to sub-section (1) of section 6 of the Bombay Devadasis Protection Act, 1934 (Bom. X of 1934).

To

The Collector of

Sir,

With reference to your notice, dated the 19 , of inquiry under sub-section (*1*) of section 6 of the Bombay Devadasis Protection Act, 1934, relating to land comprised in Survey No. in the village of in the taluka of district which was served on me on I hereby give you notice that I have been holding the aforesaid land as a devadasi since before the 15th day of October 1934 and I object to the release of the land from liability for performance by me of services as a devadasi and to the payment of rent in lieu of such services.

Signature of Devadasi.

THE BOMBAY NURSES, MIDWIVES AND HEALTH VISITORS REGISTRATION ACT, 1935 (BOM. VII OF 1935).

G. N., G. D., No. 909/33, dated 1st August 1935 (B. G., Pt. IV, p. 653).

Amended by G.N., G.D., No. 909/33, dated 27th April 1936.

Amended by G.N., G.D., No. 909/33, dated 25th September 1936.

Amended by G.N., G.D., No. 909/33, dated 28th October 1936.

Amended by G.N., G.D., No. 909/33, dated 23rd November 1936.

Amended by G.N., G.D., No. 909/33, dated 26th November 1936.

Amended by G.N., G.D., No. 909/33, dated 2nd August 1937.

Amended by G.N., G.D., No. 909/33, dated 6th September 1937.

Amended by G.N., G.D., No. 909/33, dated 4th June 1938.

Amended by G.N., G.D., No. 909/33, dated 31st October 1938.

Amended by G.N., G.D., No. 909/33, dated 27th December 1938.

Amended by G.N., G.D., No. 909/33, dated 22nd December 1939.

Amended by G.N., G.D., No. 3977, dated 7th June 1940.

Amended by G.N., G.D., No. 909/33, dated 8th October 1940.

Amended by G.N., G.D., No. 3977/33, dated 9th November 1940.

Amended by G.N., G.D., No. 3977/33, dated 26th April 1941.

Amended by G.N., G.D., No. 3977/33, dated 19th July 1941.

Amended by G.N., G.D., No. 3977/33, dated 2nd September 1941.

Amended by G.N., G.D., No. 3977/33, dated 2nd March 1942.

Amended by G.N., G.D., No. 3977/33, dated 8th May 1942.

Amended by G.N., G.D., No. 3977/33, dated the 21st December 1942.

Amended by G.N., G.D., No. 3977/33 (b), dated 19th January 1944.

Amended by G.N., G.D., No. 1373/33, dated 17th February 1944.

Amended by G.N., G.D., No. 3977/33, dated 14th March 1944.

Amended by G.N., G.D., No. 3977/33, dated 6th June 1944.

Amended by G.N., G.D., No. 3977/33, dated 20th July 1944.

Amended by G.N., G.D., No. 3977/33, dated 17th September 1945.

Amended by G.N., G.D., No. 3977/33, dated 1st November 1945.

Amended by G.N., G.D., No. 3977/33, dated 27th December 1945.

Amended by G. N., G. D., No. 3977/33, dated 21st October 1946.

Amended by G. N., H. & L. G. D., No. 3977/33, dated 8th August 1947.

Amended by G. N., H. & L. G. D., No. 3977/33, dated 27th August 1948.

Amended by G. N., H. & L. G. D., No. 5482/33, dated 20th December 1948.

Amended by G. N., H. & L. G. D., No. 3977/33, dated 23rd February 1949.

Amended by G. N., H. & L. G. D., No. 3977/33, dated 10th March 1949.

Amended by G. N., H. & L. G. D., No. 3977/33, dated 19th August 1949.

Amended by G. N., H. & L. G. D., No. 3977/33, dated 30th November 1949.

Amended by G. N., H. & L. G. D., No. 3977/33, Eratum, dated 10th January 1950.

In exercise of the powers conferred by section 22 of the Bombay Nurses, Midwives and Health Visitors Registration Act, 1935 (Bom. VII of 1935), the Governor in Council is pleased to make the following rules :—

PART I.

General.

1. *Short title.*—These rules may be called the Bombay Nurses, Midwives and Health Visitors Registration Rules, 1935.

2. *Definitions.*—In these rules, unless there is anything repugnant in the subject or context,

(1) "the Act" means the Bombay Nurses, Midwives and Health Visitors Registration Act, 1935,

(1-A) "Auxiliary Service Nurse" means a member of the Auxiliary Nursing Service of India established by the Government of India,

(1-B) "Demobilised Nurses" means Nursing Orderlies who have served in the Indian Army Medical Corps, or Nursing Orderlies domiciled in India who have served in the Royal Army Medical Corps, or Sick Berth Officers and Attendants who have served in the Indian Navy, or Medical Assistants (Nursing) who have served in the Indian Air Force,

(2) "the Registrar" means the Registrar appointed by the Council under the by-laws,

(3) "Schedule" means a schedule to these rules,

(4) "section" means a section of the Act.

PART II.

Appointments to Council and duration of Office.

Sec. 5, Sec. 22 (2) (*a*).

3. *Duration of Office.*—In the case of the first constitution of the Council, the members other than ex-officio members specified in sub-clauses (*i*) to (*vii*) of sub-section (2) of section 3 shall hold office for a period of one year.

4. *Election and nomination of members.*—(1) Three months before the expiration of the period of office of the Council (hereinafter called the expiry date), the Registrar shall give notice in writing— Sec. 22 (2) (b).

(a) to the State Government requesting the nomination of three members under section 3 (2) (c) by a date not less than one month before the expiry date,

(b) to the Bombay Medical Council to elect two members under section 3 (2) (b) (v) by a date not less than one month before the expiry date, and

(c) to the affiliated institutions entitled to elect members under section 3 (2) (b) (i), (ii), (iii) and (iv) calling upon them each to propose a candidate for election by a date two months before the expiry date.

(2) Seven weeks before the expiry date, the Registrar shall send to each of the electing institutions a voting paper in the form of a list of the candidates proposed for their electoral district calling upon them to return the voting paper duly filled in by a date one month before the expiry date. Each institution shall have one vote and an additional vote for every twenty beds in excess of twenty under its administration, the total number of beds being increased for this purpose, where necessary, to the next multiple of 20.

(3) A meeting of the Council shall be held in the month preceding the expiry date and at such meeting the names of the nominees and the persons elected by the Bombay Medical Council shall be presented to the Council and the votes of the institutions shall then be counted, the President having a casting vote in the case of a tie and the names of the members elected to the new Council shall be recorded.

5. *Casual Vacancies.*—When a vacancy occurs in the office of a member of the Council under section 6, it shall be filled as soon as conveniently may be by the election or nomination, as the case may be. The provisions of rule 4 shall *mutatis mutandis* apply to such election or nomination. Sec. 6, Sec. 22 (2) (b).

6. *Vice-President.*—At the first meeting of the Council in every year and at the first meeting after the office of the Vice-President shall have fallen vacant or after a member has held the office of Vice-President for one year, the Council shall proceed to elect a Vice-President from among their number. Names shall be proposed and seconded by members at the meeting and in the case of more than one name being duly proposed and seconded vote shall be taken by ballot, each member present having one vote and the President or the Chairman of the meeting having a second or casting vote in case of a tie. Sec. 22 (2) (b). [See also s. 3 (3).]

Part III.

Maintenance of Register.

7. *Division of Register into Parts.*—(1) The Register shall consist of the following parts :— Sec. 11 and Sec. 22 (3) (c).

A. A general part containing the names of all female nurses who satisfy the conditions of admission to that part of the Register.

AA. A general part containing the names of persons trained as Assistant Nurses.

B. A supplementary part containing the names of male nurses.

C. A supplementary part containing the name of nurses trained only in the nursing and care of sick women and children.

CC. A supplementary part containing the names of Auxiliary Service Nurses trained in the State of Bombay.

D. A general part containing the names of persons trained as Midwives.

DD. A general part containing the names of persons trained as Assistant Midwives.

E. A general part containing the names of midwives trained as Health Visitors.

(2) The Register shall contain the particulars set forth in Schedule I.

(3) Each person admitted to the Register shall be assigned a consecutive number in the part or parts of the Register in which the name of such person is included and cross references to the number in other parts shall be made in each part of the Register against the name of a person registered in more than one part.

Sec. 12 proviso.

8. *Transfer from Bombay Presidency Nursing Association Register.*—The Registrar shall forthwith transfer from the present register of the Bombay Presidency Nursing Association to the appropriate part of the Register all the names now appearing therein, and no fee shall be charged for such registration.

Sec. 12.

9. *Admissions.—Bombay*—Every person who makes an application to the Registrar in the manner set out in Form "B" in Schedule II for admission to a part of the Register and who complies with the conditions for admission prescribed in Part IV of these rules and produces before the Registrar (1) a certificate in Form C in Schedule II from an approved training institution signed by the Matron, Medical Superintendent or other responsible officer of such institution that such person has satisfactorily completed the prescribed training and (2) a certificate in Form D in Schedule II from the Examining Board that such person has passed the prescribed examination shall, upon payment to the Registrar of a fee of rupees ten, be admitted to such part of the Register :

Provided that in the case of a person who applies to be admitted to more than one part of the Register or who at the date on which such person applies to be admitted to a part of the Register, is already registered in another part of the Register, the registration fee payable in respect of admission to any second, third or subsequent part of the Register shall be rupees five in each case :

Provided also that the name of a nurse registered in Part "C" of the Register may be transferred to Part "A" of the Register on production of a certificate from an approved training institution that the nurse has had six months' training in the adult male wards of that institution and a certificate from the Examining Board that she has passed the examination in Male Surgical Nursing held by the Council ; or a certificate from the Director General, Indian Medical Service or the Superintendent, Indian Military Nursing Service, that she was a member of the Indian Military Nursing Service and has worked exclusively, for a period of not less than six months, in the adult male medical and surgical wards of a military hospital, to the satisfaction of the authorities concerned :

Provided further that training in any approved institution under the Bombay Presidency Nursing Association and an examination conducted by that Association prior to the Act coming into force shall be deemed to be training and examination under Part IV of these rules :

Provided further that an Auxiliary Service Nurse who makes an application in this behalf and pays a fee of Rs. 2, may be admitted to Part CC of the Register on producing evidence to the satisfaction of the Council that she is an Auxiliary Service Nurse employed in the State of Bombay.

9A. Notwithstanding anything contained in rule 9, persons who have been trained, prior to the establishment of a statutory council, in any of the Part A States or Part C States or in any country with which the Council has entered into an agreement for reciprocal registration, may be admitted by the Council to any part of the register, on their fulfiling such conditions as may be considered necessary by the Council and on the merits of each individual case.

10. *Change of address.*—Every registered person shall immediately give notice to the Registrar of any change of name or change of permanent address and every person registered in Part CC of the Register shall also give immediate notice to the Registrar or any change of her employment and the Registrar shall amend the Register accordingly. Sec. 11, Sec. 22 (2) (c).

11. *Inspection.*—The Register shall be open for inspection of any person during office hours, at the office of the Council, on payment of a fee of Re. 1.

12. *Removal from Register.*—If the Registrar receives proof of the death of a registered person or receives no answer to two notices sent by him to a registered person at the registered address of such person by registered post at an interval of not less than nine months, he shall remove the name of such person from the Register. Any person so removed shall be entitled to have his name readmitted to the Register on proving to the Council that he is alive and intends to practise in the State of Bombay. The fee for having the name readmitted shall be Rs. 2. Sec. 13, Sec. 22 (2) (c).

13. *Misconduct.*—If the Council has reason to believe that a registered person has been convicted of any criminal offence, or is accused of malpractice, negligence or other misconduct, the Council shall cause an enquiry to be made and shall call upon the registered person for an explanation or defence, and if the Council considers that the case demands more than a warning or censure, it shall order the name of such person to be removed from the register and such person shall forthwith return his certificate to the Registrar to be cancelled. A name once removed from the Register under this rule shall not be readmitted nor shall a new certificate be granted except under special circumstances which, in the opinion of the Council, justify the adoption of this course. Any notice or order under this rule shall be deemed to be duly served if sent by registered post addressed to the registered person at the permanent address appearing in the register. Sec. 13 Sec. 22 (2) (e).

Explanation.—In this rule the word "malpractice" shall include contravention of any provision of the by-laws in Part XII-A of the Bombay Nurses, Midwives and Health Visitors Registration By-laws, 1935.

14. *Certificate of Registration.*—Every person admitted to the Register shall be granted a certificate in Form A in Schedule II stating in which part his name has been registered and such certificate shall be sealed with the common seal of

the Council and no document purporting to be a certificate of admission to the Register shall be valid unless it is sealed with the common seal of the Council.

Every nurse who passes the Diploma Examination in Fever Nursing or Children's Nursing shall be granted a diploma in form A (1) or A (2), as the case may be, under the common seal of the Council on payment of Rs. 2.

Every *midwife* who passes the Advanced Diploma Examination *for Midwives* shall be granted a diploma in Form AA under the common seal of the Council on payment of Rs. 2:

15. *Lost Certificates.*—In the event of a certificate or diploma being lost or accidentally destroyed, the holder may apply to the Council for a fresh certificate or diploma and the Council may, if it thinks fit, grant such certificate or diploma upon payment of a fee of Rs. 2. A certificate or diploma issued under this rule shall be marked "Duplicate".

16. *Certificate as to entry in Register.*—Any person shall be entitled upon payment to the Registrar of a fee of rupees two to be furnished with a certificate under the hand of the Registrar certifying that on a specified date or during a specified period a person is or was not included in any part of the Register, as the case may be.

PART IV.

Sec. 22 (2) (*h*).

17. *Inspections.*—The Council shall from time to time depute one or more of its professional members to visit approved and recognised Training Institutions with a view to ascertain the manner in which the teaching of the subjects prescribed is being conducted, and to make recommendations to the Council regarding such education and training. Every such training institution shall be so inspected at least once in every five years.

Sec. 22 (2) (*h*).

18. *Withdrawal of approval and recognition.*—If, on the report of its respresentative, the Council, is of opinion that the training at an approved and recognised institution is not being properly carried on, the Council may withdraw its approval and recognition and remove the institution from the list of approved and recognised training institutions and such institution shall not be readmitted to the list, unless and until the Council is satisfied that the training at such institution will be properly carried on in future.

19. *Preliminary Qualifications of Probationers.*—(1) No person shall be admitted as probationer for training as a Nurse or Midwife into any approved training institution unless the candidate :—

(*a*) if requiring training in English, has passed the VI Standard of a recognised Secondary School or an equivalent Standard of an English Teaching or a European School, and if requiring training in any of the regional languages approved by the Council, has passed the III Standard of a recognised Secondary School or the Primary School Leaving Certificate Examination or produces other evidence satisfactory to the Council that she has had sufficient general education :

Provided that a candidate requiring training in any of the regional languages who does not possess knowledge of English up to the standard ordinarily possessed by persons passing the III Standard of a recognised Secondary School, shall

not be admitted as a probationer in any training institution unless in such institution arrangements are made for teaching English up to such standard and a test examination is held, in the case of a probationer for training as a Nurse, at the end of the second year of her training, and in the case of a probationer for training as a midwife, at the end of the first year of her training.

Provided further that a candidate who does not possess any of the educational qualifications prescribed in this clause may be admitted as probationer for training as a Midwife if she is a registered Assistant Midwife and has worked for seven years as an Assistant Midwife and is certified by the Council to have carried out her duties efficiently :

Provided also that the demobilised nurses who have been enrolled with the Council on a separate roll maintained by it for this purpose as laid down in the by-laws and who hold the certificates of having passed the Army First Grade or Army Special examination in General Education of the Indian Army Medical Corps or an examination in General Education equivalent to these examinations and have passed any of the following examinations may be admitted as probationers for training as nurses in any training institution,—

(*i*) the Nursing Diploma or 3rd grade or 2nd grade Nursing certificate examination of the Indian Army Medical Corps ;

(*ii*) the Nursing Orderlies Class I, II or III certificate examinations of the Royal Army Medical Corps ;

(*iii*) the Sick Berth Chief Petty Officers or Petty Officers, Leading Sick Berth Attendants or Sick Berth Attendants Class I certificate examination of the Indian Navy ;

(*iv*) the Medical Assistants (Nursing)—Leading Aircraftsman or Aircraftsman Grade I certificate examination of the Indian Air Force.

(*b*) has completed the age of 18 years in the case of candidates for general nursing, and 19½ in the case of candidates for midwifery, and has not completed the age of 40 years for General Nursing and 45 for midwifery :

Provided that in a hospital intended exclusively for the treatment of children, a candidate for general nursing, who has not attained the age of eighteen years but has attained the age of 17 years, may be admitted as a probationer :

Provided that upto the 15th day of August 1950, the Council shall have power to allow any institution to admit a probationer who is under age by a period not exceeding one year ;

Provided that demobilised nurses whose names are enrolled by the Council under the third proviso to clause (*a*) of sub-rule (1) of rule 19 may be admitted as probationers notwithstanding anything contained in this clause.

(*c*) has given at least two satisfactory references as to conduct, one being from a lady ;

(*d*) has been certified by a registered Medical Practitioner as physically fit to undergo the necessary training ;

(*e*) has recently been vaccinated.

(1AA) No person shall be admitted for training as an Assistant Nurse to any recognised training institution, unless the candidate—

(*a*) has passed the Primary School Leaving Certificate examination and possesses some knowledge of English :

Provided that the demobilised nurses who are enrolled by the Council under the third proviso to clause (*a*) of sub-rule (1) may be admitted as probationers notwithstanding anything contained in this clause :

Provided further that a candidate who does not hold a certificate of having passed the said Primary School Leaving Certificate Examination may be admitted, if, after taking a test examination, the authorities of the training institution are satisfied that she possesses a sufficient degree of general education and will be able to follow the lectures and practical demonstrations given to her during her training ;

(*b*) has completed the age of 18 years ;

(*c*) has given at least two satisfactory references as to conduct, one being from a lady ;

(*d*) has been certified by a registered medical practitioner as physically fit to undergo the necessary training ;

(*e*) has recently been vaccinated.

(1A) No person shall be admitted for training as an Assistant Midwife to any recognised Training Institution unless the candidate—

(*a*) has passed the Fourth Standard of a recognised primary school as defined in the City of Bombay Primary Education Act, 1920, or of an approved school as defined in the Bombay Primary Education Act, 1923, and possesses some knowledge of English :

Provided that a candidate who does not hold a certificate of any such school may be admitted, if, after taking a test examination, the authorities of the training institution are satisfied that she possesses a sufficient degree of general education ;

(*b*) has completed the age of 20 years but has not completed the age of 45 years :

Provided that upto the 15th August 1950, the Council shall have power to allow any institution to admit a probationer who is under age by a period not exceeding one year ;

(*c*) has given at least two satisfactory references as to conduct, one being from a lady ;

(*d*) has been certified by a registered medical practitioner as physically fit to undergo the necessary training ;

(*e*) has recently been vaccinated :

Provided that no qualified nurse shall be eligible for training as an Assistant Midwife.

(2) No person shall be admitted for training as a Health Visitor into any approved and recognised training institution unless the candidate—

(*a*) is a registered Midwife;

(*b*) has a good general education;

(*c*) has a fluent knowledge of a vernacular in use in this State or in the State where the candidate intends to work; and

(*d*) possesses the qualification prescribed in clause (*a*) of sub-rule (1) for admission as probationer for training as a Nurse or Midwife.

20. *Curriculum* (*Nurses*).—(1) The Curriculum for a Probationer training as a Nurse shall cover a period of three years including such leave not exceeding one month in a year, as the Training Institution may see fit to grant : Sec. 12, Sec. 22 (2) (*d*).

Provided that a registered Auxiliary Service Nurse joining a hospital recognised by the Council for training in general nursing shall be entitled to compute towards the total period of training as a nurse prescribed under this sub-rule the following periods :—

(*a*) not more than—

(*i*) nine months of her period of initial training in the Military Hospital, Kirkee, or in a hospital recognised by the Council or the Director General of Health Services of India for such training; or

(*ii*) six months of such period in the G. I. P. Railway Hospital, Parel, Bombay, or the Military Hospital, Colaba, provided that the daily average number of patients in the Military Hospital at Colaba is not less than 100 during the period of such training:

Provided further that the demobilised nurses whose names are enrolled by the Council under the third proviso to clause (*a*) of sub-rule (1) of rule 19, joining a hospital recognised by the Council for training in general nursing shall be entitled to compute towards the total period of training as a nurse prescribed under this sub-rule the following periods :—

(*a*) In the case of those who have passed the Nursing Diploma examination of the Indian Army Medical Corps or Nursing Orderlies Class I certificate examination of the *Royal* Army Medical Corps or Sick Berth Chief Petty Officers or Petty Officers certificate examination of the Indian Navy—

(*i*) the full period of training put in by them before passing any of the said examinations, not exceeding 24 months; and

(*ii*) two-thirds of the period of nursing service in the Indian Army Medical Corps, *Royal* Army Medical Corps or Indian Navy, after passing the examination;

(*b*) In the case of those who have passed the 3rd Grade Nursing certificate examination of the Indian Army Medical Corps or Nursing Orderlies Class II certificate examination of the *Royal* Army Medical Corps or Leading Sick Berth Attendants certificate examination of the Indian Navy—

(*i*) the full period of training put in by them before passing any of the said examinations, not exceeding 18 months; and

(*ii*) one-half of the period of nursing service in the Indian Army Medical Corps, *Royal* Army Medical Corps. or Indian Navy, after passing the examinations,

(*c*) In the case of those who have passed the 2nd Grade Nursing certificate examination of the Indian Army Medical Corps or Nursing Orderlies Class III certificate examination of the *Royal* Army Medical Corps or Sick Berth Attendants Class I certificate examination of the Indian Navy or Medical Assistants (Nursing)—Leading Air-craftsman or Aircraftsman Grade I certificate examination of the Indian Air Force—

(*i*) the full period of training put in by them before passing any of the said examinations, not exceeding 9 months:

Provided that the period of training put in by the Medical Assistants (Nursing) may be recognised up to 18 months; and

(*ii*) one-half of the period of nursing service in the Indian Army Medical Corps, *Royal* Army Medical Corps, Indian Navy or Indian Air Force, after passing the examination;

(*b*) one-quarter of her continuous service in the Auxiliary Nursing Service of India after completion of the initial training for the said service;

(*c*) the full period of her further training not exceeding nine months in special hospitals approved by the Director General, Indian Medical Service, for the training of such nurses so as to enable them to appear at the examination in General Nursing Part I;

(*d*) one-half of her further continuous service in the Auxiliary Nursing Service of India after passing the examination in General Nursing, Part I.

(2) At least six months of the period of training shall be spent in training in the nursing of adult male patients, unless the Probationer is training only for a certificate and registration as a nurse trained in the nursing of sick women and children.

(3) No probationer shall at any time during the course of training be permitted to nurse a private case.

(4) The course of training shall be in accordance with the syllabus set out in Part I of Schedule III.

20A. *Curriculum* (*Assistant Nurses*).—(1) The curriculum for a probationer training as an Assistant Nurse shall cover a period of two years. During such period the Training Institution may grant in a year ordinary leave for a period not exceeding thirty days. In addition to such ordinary leave, the Training Institution may grant in a year sick leave not exceeding fifteen days to any candidate provided that such candidate agrees to undergo, soon after the prescribed examination in which she has appeared is completed, additional training for the period of sick leave granted to her:

Provided that the training and service of the Auxiliary Service Nurses and of the Demobilised Nurses who are enrolled by the Council under the third provison to clause (*a*) of sub-rule (1) of rule 19, accepted as prescribed training under rule 20, shall be accepted as prescribed training for the purposes of this rule also.

(2) For the first four months the training shall be taken at a preliminary training school wherever possible.

(3) No probationer shall at any time during the course of training be permitted to nurse a private case.

(4) The course of training shall be in accordance with the syllabus set out in Part I-A of Schedule III.

20B. *Diploma for Fever Nursing.*—No person shall be admitted to the Diploma Examination in Fever Nursing unless such person—

(*a*) has been registered as a nurse for men, women and children not less than twelve months before the date of the examination;

(*b*) produces a certificate from a recognised institution for training pupils for the Diploma that she has taken practical training for a period not less than six months, in the wards;

(*c*) has attended not less than 24 lectures and 24 practical demonstrations in the Nursing care, Preventive measures and Disinfection for the following diseases:—

(1) Small-pox and Chicken-pox.
(2) Measles German measles, Scarlet fever and Erysipelas.
(3) Cerebrospinal Fever, Anterior polic mycletes and Encephaletis.
(4) Influenza and Whooping Cough.
(5) Plague and Diphtheria.
(6) Enteric Fever.
(7) Dysenteries and Cholera.
(8) Typhus, Relapsing Fevers and Rat-Bite Fever.
(9) Yellow Fever, Weil's Disease and other miscellaneous Fevers.

20C. *Diploma for Children's Nursing.*—No person shall be admitted to the Diploma Examination in Children's Nursing, unless such person:—

(*a*) has been registered as a nurse for men; women and children not less than twelve months before the date of Examination;

(*b*) produces a certificate from an institution recognised for training pupils for the Diploma that she has taken practical training for not less than three months, of which two months should be spent in the Medical Ward and one month in the Surgical Ward;

(*c*) has attended not less than 24 lectures and 24 demonstrations in the following subjects, namely:—

(*i*) Nutrition for and feeding of the normal child.
(*ii*) Computing formula and technic.
(*iii*) Diet for childhood with special reference to this State.
(*iv*) Diseases for children.
(*v*) Psycho-Pathelogical conditions.
(*vi*) Preventive Pediatrics.
(*vii*) Surgical conditions—Burns, Cleft palate, Hare lip, Spinabifida, Pyloric stenosis, Tonsils and adenoids, Intersusception, Hernias, Imperforate anus, Phemosis, Extrophy of the bladder, Hyposfadias;

(*d*) has received instructions for preparation for special feed for children;

(*e*) has attended the out-patients' Department for not less than two times in a week;

(*f*) has attended clinical lectures at least once in a week.

Sec. 12.
Sec. 22 (2) (d).

21. *Curriculum (Midwives).*—(1) The curriculum for a probationer training as a midwife shall cover a period of—

(a) nine months, if the candidate has been registered, or is entitled to be registered, as a nurse, or has been registered as an Assistant Midwife or has appeared and failed either at the final M.B.B.S. or L.C.P.S. Examination of Bombay.

(b) fifteen months, if the candidate has passed the examination in General Nursing Part I, of the Council, and

(c) in any other case, one year and a half including such leave not exceeding one month as the Training Institution may see fit to grant.

During such period, the Training Institution may grant ordinary leave, in the case of a candidate required to take training for nine months, for a period not exceeding fifteen days and in the case of any other candidate, for a period not exceeding thirty days. In addition to such ordinary leave, the Training Institution may grant sick-leave not exceeding fifteen days to any cadidate provided that such candidate agrees to undergo soon after the prescribed examination for midwives in which she has appeared is completed, additional training for the period of the sick-leave granted to her.

(2) The course of training shall be in accordance with the syllabus set out in Part II of Schedule III.

(3) The candidate shall carry out Antenatal examination of at least 20 patients and shall witness not less than 30 labour cases during the course of training.

(4) The candidate shall attend not less than 20 labour cases making such examination as may be necessary during the course of labour, including personally delivering the child and after birth and shall nurse at least 20 cases during the lying in period.

21-A. *Curriculum (Assistant Midwives).*—(1) The curriculum for a probationer training as an Assistant Midwife shall cover a period of one year.

(2) The course of training shall be in accordance with the syllabus in Part IV of Schedule III.

(3) The candidate shall carry out Antenatal examination of at least 10 patients and shall witness not less than 30 labour cases during the course of training.

(4) The candidate shall attend not less than 20 labour cases making such examinations as may be necessary during the course of labour, including personally delivering the child and after birth and, shall nurse at least 20 case during the lying-in period.

(5) The candidate shall attend a Maternity and Infant Welfare Clinic and receive practical instruction in the care and management of children with special reference to the first month of life.

21-B. *Advanced Diploma for Midwives.*—No person shall be admitted to the *Advanced* Diploma Examination for *Midwives* unless such person—

(a) has been registered as a Midwife not less than 12 months before the date of examination;

(*b*) *produces a Certificate from an institution recognised for training pupils for the Diploma that she has taken training for a period of not less than six months ;*

(*c*) has attended not less than 12 lectures on the following subjects, namely :—

The structure of the generative organs.

Physiological changes during pregnancy.

Development of ovum.

Management of labour with particular reference to delivering patients in their own homes.

Post-natal care.

Infant feeding—Re-establishment of location.

Minor ailments of infancy.

Veneral diseases.

New growths.

Birth control.

Record keeping.

Law relating to protection of women and children in India with particular attention to the Bombay Maternity Benefit Act, 1929, and the Bombay Children Act, 1924.

Principles of Health Insurance.

Voluntary Maternity and Child Welfare agencies.

Social conditions affecting Maternal ; and

Infant Health ;

(*d*) has attended and taken responsibility for the Ante-natal care, at the clinic and patient's own home, of not less than 10 pregnant women, such responsibility including the booking of cases, the keeping of records and the reporting of cases ;

(*e*) has attended and taken responsibility for not less than 10 women during labour in the patients' own homes ;

(*f*) has attended and nursed not less than 10 lying in women and their children in the patient's own home during the 14 days immediately following labour ;

(*g*) has attended at least five sessions at a Maternity and Infant-Clinic approved by the Council for the purpose, and received at the Clinic or elsewhere practical instruction in the care and management of children with special reference to the first month of life ;

(*h*) has attended for not less than one month at a *well established* Veneral Clinic of Venereal Department of a hospital *recognised* for *training of pupil Nurses and produced a certificate to* that effect : and

(*i*) has produced along with the application for admission to the examination a certificate that she has worked as a midwife on the staff of a hospital recognised by the Council for the purpose of a period of not less than 6 months and that during the period she has worked for one month in the theatre and one month in Septic Block.

22. *Curriculum (Health Visitors).*—The Curriculum for a Probationer training as a Health Visitor shall cover a period of twelve months including such leave not exceeding one month as the Training Institution may see fit to grant, and shall be in accordance with the syllabus set out in Part III of Schedule III and shall include the following practical training :—

(1) Attendance at infant welfare centre and creche, as follows :—

(*a*) Three hours daily at infant welfare centre and at least 75 attendances.

(*b*) Ante-natal clinic, 40 attendances.

(*c*) Child welfare clinics and creche, 40 attendances.

(2) Instruction and training in home visiting, including attendance at 75 visits.

(3) Instruction in giving health talks and magic lantern lectures to mothers, 30 lectures.

(4) Attendance as a nurse at a Children's ward for two months of training with 4 hours duty per day.

(5) Practical Hygiene, 12 visits with a Health Officer or Assistant Health Officer of a Municipality or a Local Board.

(6) Vaccination, 3 demonstrations.

(7) Instructions in conducting sewing classes, 16 demonstrations.

(8) Rural Health Training at a Rural Health Unit, one month.

Sec. 12. Sec. 22 (2) (*d*).

23. *Prescribed Examinations.*—The prescribed examinations; and methods of conducting the same and the fees payable by candidates therefor shal be as set forth in Schedule IV.

PART V.

24. } [*Deleted.*]
25. }

26. *Miscellaneous.*—The fee payable in respect of an appeal to the State Government under section 14 or 16 shall be rupees five.

SCHEDULE I.

REGISTER.

(*See* Rule 7.)

Each part of the Register (General and Supplementary) shall show in respect of each registered person the following particulars :—

(*a*) Consecutive registered number.

(*b*) Full name and in the case of a married woman maiden name and full name.

(*c*) Permanent address.

(*d*) Nationality or caste.

(*e*) Place or places and period or periods of training. Only details appearing in the Register of the Bombay Presidency Nursing Association or in the certificate produced should be entered under this heading.

(*f*) *Qualifications.*—Under this heading the nature of the qualifications and the dates of certificates should be entered.

(*ff*) In the case of Part CC, the nature and place of employment.

(*g*) Date of registration.

(*h*) *Remarks.*—Under this heading cross references to any other part of the register in which the person may be registered and a reference to the Diploma in Fever Nursing or Children's Nursing or the Advanced Diploma for Midwives if any, which the person has obtained, and the date thereof should be entered.

SCHEDULE II.

FORM A.

(Rule 14.)

THE BOMBAY NURSES, MIDWIVES AND HEALTH VISITORS REGISTRATION ACT, 1935.

Certificate of Registration.

The Bombay Nurses, Midwives and Health Visitors Council hereby certify that was on the day of 19 , registered in part of the Register maintained under the provisions of the abovenamed Act as a

Dated the day of 19 .

Sealed with the Common Seal of the Bombay Nurses, Midwives and Health Visitors Council, in the presence of

Members of the Council,

Registrar.

FORM A (1).

THE BOMBAY NURSES, MIDWIVES AND HEALTH VISITORS REGISTRATION ACT, 1935.

Diploma for Fever-Nursing.

The Bombay Nurses, Midwives and Health Visitors Council hereby certify that has passed the Diploma Examination in Fever-Nursing prescribed under the abovementioned Act, on

Dated the day of 19

Members of the Council,

Common Seal.

Registrar.

FORM A (2).

THE BOMBAY NURSES, MIDWIVES AND HEALTH VISITORS REGISTRATION ACT, 1935.

Diploma for Children's Nursing.

The Bombay Nurses, Midwives and Health Visitors Council hereby certify that has passed the Diploma Examination in Children's Nursing prescribed under the abovementioned Act, on

Dated the day of 19

Members of the Council,

Common Seal.

Registrar.

FORM AA.

THE BOMBAY NURSES, MIDWIVES AND HEALTH VISITORS REGISTRATION ACT, 1935.

Advanced Diploma for Midwives.

The Bombay Nurses, Midwives and Health Visitors Council hereby certify that has passed the Advanced Diploma Examination for Midwives prescribed under the above-mentioned Act, on

Dated the day of 19 .

(Common Seal) Members of the Council,

Registrar.

FORM B.
(Rule 9.)

THE BOMBAY NURSES, MIDWIVES AND HEALTH VISITORS REGISTRATION ACT, 1935.

Application for Admission to Register.

I (Name in full) of (Permanent address in full) hereby apply to be admitted to the Register as a

I am previously registered as
My nationality or caste is
I was trained at

I enclose the following certificates ( ) which may please be returned to me (give date and particulars of certificates) and I hereby undertake that if I am admitted to the Register, I will in the practice of my profession observe and be bound by the by-laws and notifications issued by the Council so far as they affect me and that if the Council shall at any time after due enquiry order my name to be removed from the Register I will return to the Registrar my certificate and Badge (if any).

Date

(Signature)

The Registrar,
Bombay Nurses, Midwives and Health Visitors Council.

FORM C.

(Rule 9.)

Certificate of Training.

Name of Institution

We hereby certify that (Name) has undergone the training prescribed by the Rules and By-laws of the Bombay Nurses, Midwives and Health Visitors Council for the training of

and that her/his conduct during training was

Dated the day of 19 .

Signature.

FORM D.

(Rule 9.)

THE BOMBAY NURSES, MIDWIVES AND HEALTH VISITORS REGISTRATION ACT, 1935.

Certificate of Examining Board.

I hereby certify that has passed the Examination prescribed under the Act for

*She/he passed with Honours

Date

President,
Examining Board,
The Bombay Nurses, Midwives and Health Visitors Council.

SCHEDULE III.

(Rules 20–22.)

PART I—NURSES.

SYLLABUS FOR THE EXAMINATION IN GENERAL NURSING—PART I.
(Group A).

(1) Nursing Procedure.

Methods of cleaning.

Care of linen. Removal of stains.

Care of rubber goods.

---

* Delete if necessary.

Care of the patient. Bed bath; lifting and turning in bed. Care of mouth, eyes, hands and feet; Care of hair, washing long hair in bed; treatment of a verminous head.

Method of feeding patients in bed.

Bed sores—causes, signs and symptoms, prevention.

Temperature, pulse, respiration, charting.

Simple enema.

Uses of ice cap, hot water bottle, air ring water bed, bed rest, bed blocks, bed tables.

Use of common instruments and methods of sterilisation, e.g., dissecting forceps, artery forceps, cheatles forceps, sumus forceps, probe, tongue, depressor, spatula scalpel, surgical scissors, catheters.

Weights and measures. Simple abbreviations.

Aseptic technique of dressing a wound.

Bed-making. Making an occupied bed. Operation bed.

Bandaging. Paddling splints.

History of Nursing, Ethics.

(2) Elementary Anatomy and Physiology.

(40 Lectures.)

The Human Body.

General view.—Cells, tissues, organs, their arrangement and structure. The body as a whole. Chief cavities and their contents.

The Skeleton.

Bone.—Structure and growth. Varieties of bones (attachment of muscles not required). Red bone marrow, yellow marrow and their functions.

Skull.—Names, position and brief description of bones of cranium and face. Formation of orbit, nose, mouth, teeth. Spinal column and thorax. General character of vertebræ; varieties, the column as a whole, its curves, intervertebral discs, sternum, ribs and costal cartilages.

Shoulder girdle and upper extremity, including bones of wrist and hand (details about small bones not required).

Pelvic girdle and lower extremity, including bones of ankle and foot; difference between male and female pelvis (details about small bones not required).

Joints and Muscles.

Joints.—Formation, including cartilages, ligaments, synovial membranes; varieties and mechanism; chief joints in body.

Muscles.—Their general features; voluntary, involuntary cardiac; their mode of action the position, extent and action of the following chief muscles of the body :—

Eye muscles, facial muscles (not individual muscles), sternomastoid, delatoid, trapezius, pectoralis major, biceps, brachii, triceps, diaphragm, ilio-psoas, gluteus maximus, quadriceps, femoris, adductors, ham strings, gastroenemius and soleus.

Rigor mortis.—Location and description of inguinal canal and femoral canal.

Blood and Circulatory System.

Blood.—Composition, functions; coagulation, anti-bodies (briefly).

Heart.—Position, structure and function. Auricles and ventricles.

Valves.—Cardiac Cycle, heart sounds, apex heat (cardiac-impulse).

Blood vessels.—Arteries, veins and capillaries; their structural differences. Name and position of the following chief vessels :—

Aorta and its chief branches; subclavian, brachial, radial and ulnar, common carotid, external and internal carotid, common iliac, external and internal iliac, femoral and popliteal arteries. Vertebral artery. Planter and palmar arches (details not required); and coronary arteries. Inferior vena cava; superior vena cava. Portal vein. External and internal jugular veins, axillary, cephalic, basilic, common iliac, external and internal iliac, femoral, popliteal, great suphenous veins and coronary veins.

Circulation of blood.—General pulmonary and portal circulations. Pulse, Blood pressure. Lymphatic system. Lymphatic vessels, glands, thoracic duct. Composition, circulation and functions of lymph. Mode of formation of lymph. Spleen.

Respiratory System.

Organs of respiration.—Position, structure, function.

Mechanism and process of respiration: The chief muscles concerned in respiration. Purpose of respiration; relation to circulation. Tissue respiration.

Digestive System.

Alimentary tract: Position, structure, and functions of component parts and related glands.

Foodstuffs and accessory food factors. Normal diet of man.

Composition of milk (Human and Cows'). Coagulation of milk.

Process of digestion and absorption; Mechanical digestion. Mastication, deglutition, peristalsis and antiperistalsis.

Chemical digestion and absorption.

Metabolism.

Fate of foodstuffs in organism. Body heat; regulation of body temperature.

Excretory system.

Bowels : Composition of faeces. Defaecation.

Kidneys, Bladder, Ureters and Urethra (male and female).

Structure and functions. Urine. Micturition.

Skin : The epidermis, the dermis. Sweat glands, sebaceous glands. Hair and nails. Functions.

Endo-Crine system.

Pancreas, thyroid and parathyroids. Suprarenal and pituitary glands. Ovaries and testis. Position and function.

Nervous system.

Central nervous system ; Cerebrum with names of important fissures and lobes and their functions. A general idea of ventricles.

Cerebellum and its functions, Medulla, Spinal cord.

Cranial and spinal nerves (in general). Reflex action.

Meninges of the brain and spinal cord.

Autonomic or sympathetic nerves (in general).

Organs of special sense.

Reproductive system.

Generative organs : Position, structure, function.

Note.—As regards the important organs and cavities in the body candidates would be required to know only their location, size, shape, extent and function.

(3) Hygiene

(8 Lectures.)

Air : Its composition and impurities. The principles of ventilation : natural and artificial and their application to houses and hospitals. Atmospheric pressure. Radiation and evaporation.

Air conditioning.

Water : Sources. Hard and soft water. Treatment of water for domestic use. Relation of impure water to the spread of diseases.

Milk : Composition. Sources of contamination. Adulteration, storeage and preservation.

Disposal of refuse : Various methods in use. Dry, and water system. General arrangements of house and hospital drainage.

Personal hygiene : Habits. Exercise. Rest and recreation. Cleanliness. Care of skin. Bathing. Kinds of baths. Care of hands, hair and nails. Clothing. Parasites. Prevention and treatment of common skin infections. Care of the mouth and teeth. Soaps.

Infection and contagion : Nature, sources and modes of transmission. Insects and other parasities. Methods of disinfection.

Lighting : Natural and artificial.

Hygiene of the ward and sick room.

SYLLABUS FOR THE EXAMINATION IN GENERAL NURSING—PART I (GROUP B).

Theory and Practice of Nursing (Part I).

(24 Lectures and Demonstrations.)

Ethical aspects. Hospital étiquette.

Domestic Ward management :—

(*a*) Methods of cleaning.

(*b*) Care of furniture.

(*c*) Care of bedding, linen, blankets, waterproofs.

(*d*) Care of kitchen, bathroom, lavatory.

(*e*) Sanitary methods of cleaning utensils, baths, lavatories, crockery, mackintoshes.

(*f*) Disposal and disinfection of soiled linen, and dressings, etc.

General care of the patient :—

(*a*) Lifting and turning.

(*b*) Bathing, in bed, in bathroom.

(*c*) Care of back, hands, feet, head, hair, mouth, teeth.

Bed making :—

(*a*) General.

(*b*) Special, for operation, fracture, plaster, amputation, rheumatic, renal and cardiac cases.

Bed sores.

Filling of water beds, water and air pillows, hot water bottles.

Care of rubber mattresses.

Charting : Temperature, pulse, respiration.

Common abbrevations in prescriptions.

Measuring of lotions and simple drugs.

Inhalations by steam kettle, inhaler oxygen apparatus.

Fomentation surgical and medical.

Iec bag.

Enemas, cleansing and stimulant.

Excreta. Preservation of specimens.

Requirements for simple ward dressings.

Cleaning and sterilizing instruments.

Care and sterilization of catheters.

Mending and care of rubber gloves.

Preparing and serving meals.

Feeding helpless patients and children.

Day and night reports of patients.

Bandaging. (*10 hours*)—

Splints in common use.

Padding splints.

Invalid Cookery. (*10 hours*)—

Methods of cooking :—

(1) Milk preparations : Whey, Junket, Milk Jelly, Peptonised milk, Lactic acid milk, Bangers food, Gruel, Arrowroot.

(2) Egg preparations : Albumen water, eggflip, custard, omlette, poachped egg, scrambled egg.

(3) Meat preparations : Beef tea, mutton broth, bone and vegetable broth, raw meat juice, liver soup.

(4) Various : Barley water, Imperial drink, Lemonade, Linseed tea.

SYLLABUS FOR THE EXAMINATION IN GENERAL NURSING—PART II.

Theory and Practice of Nursing (Part II).

(20 Lectures and Demonstrations.)

Extensions. Plasters.

Preparation for rectal and Vaginal examinations.

Artificial feeding. Test meals.

Irrigation of bowel, stomach, throat, nose, ears and eyes.

Weights and measures. Lotions in ward use.

Causes of sleeplessness. Methods of inducing sleep.

Methods of reducing temperature.

Technical terms and abbreviations in common use.

Administration of drugs : hypodermic injections.

Preparation for intravenous and subcutaneous infusions ; blood transfusion and venesection.

Instruments in common use.

Local applications ; cold and hot.

Counter irritation by poultices mustared leaves, blisters, cupping leeches.
Aspiration, tapping, lumbar puncture, pneumothorax.
Catheterisation. Bladder irrigation. Methods of relieving difficulty of micturition.

Baths. Sponging. Packs. Radiant heat, Hot air, and Vapour Baths.

Preparation of patient for radiological examinations and clinical investigations. Last Offices.

Materia Medica and Therapeutics.

(6 Lectures).

Laxatives, purgatives, anthelmintics, expectorants, emetics, cardiac drugs, antipyretics, diuretics, diaphoretics, sedatives, hypnotics, narcotics, anae sthetics nerve stimulants. Toxic effects of drugs. Weights and measures. Poisons.

Hypodermic injections. Value of cubic centimeter, liter, gamme.

Physical therapy : Vaccines. Serum therapy.

Poisons.

(4 Lectures).

Mercury, lead, arsenic, alcohol, acids and alkalies, opium, belladonna, strychnin and carbolic acid. General principles of treatment.

Dietetics.

(8 Lectures).

Chemical constituents of foods and value of special articles of food such as milk, butter, cheese, eggs, fish, meat, vegetables and fruits, farinaceous foods, alcohol, beverages, condiments.

Proprietory preparations, their value and dangers.

The feeding of infants and children and acutely ill-patients.

Diet in general disease. Diet in special diseases—deficiency diseases ; diseases of the blood, stomach, intestines, kidneys and liver ; diabetes mellitus. Diets in convalescence.

Routine hospital diets :—

High caloric, low caloric, high and low protein, salt-free, protein free, high fat, low fat, high carbohydrate, etc., diets.

Diet in various disorders :—e.g. constipation, diarrhoea, vomiting, distension, maintaining fluid balance.

Medical Nursing.

(20 Lectures.)

Note.—Candidates are expected to know the causes of important common diseases under each system, their recognition, treatment and nursing care.

Diseases of the Blood and Organs of Circulation.

Anæmias, General symptoms of heart disease, acute and chronic; features of heart failure; the pulse—its rate, character, rhythm; oedema, effusions cyanosis. Treatment and nursing care.

Diseases of the Organs of Respiration.

General symptoms of respiratory disease; breathing—various types; pain; cough—character; sputum. Pheumonia, bronchitis, pleurisy, phthisis. Treatment and nursing care.

Diseases of Organs of Digestion.

General symptoms; appetite, nausea, vomiting, character of vomit, abdominal pain, state of bowels, character of stools, Jaundice. Treatment and nursing care.

Diseases of Urinary Organs.

General symptoms; urine. Nephritis, acute and chronic. Calculus. Cystitis. Uræmia. Treatment and nursing care.

Diseases of the Nervous System.

General features; loss of power of movement; sensation; bladder-function; convulsions; coma. Nursing of cases of paralysis, cholera, meningitis, functional nervous disorders. Elementary principles of treatment by massage and electricity.

Constitutional Diseases.

Acute Rheumatism. Diabetes mellitus. Deficiency diseases. Treatment and nursing care.

Diseases of the Endocrine System.

Thyroid gland; goitre, exophthalmic goitre, myxœdema, Suprarenal glands. Pituitary gland.

Diseases of the Joints.

Common affections of the joints. Treastment and nursing care.

Infectious Diseases.

1. (Infectious Diseases): Epidemic. Endemic. Sporadic. Pandemic diseases.
2. Incubation period.
3. Modes of infection by micro-organisms: (1) Inoculation. (2) Inhalation. (3) Ingestion.

Modes of transmission : (1) Direct infection. (2) Indirect infection. (3) Carriers. (4) Insects.

Control of infection. Public and domestic measures. Notification. Isolation. Quarantine. Protective inoculation. Disinfection.

4. Defensive mechanism of the body. Immunity.

5. Serum and vaccine therapy. Vaccination against Small Pox.

6. Fever and communicable diseases : Enteric fevers, common cold and influenza, scarlet fever, measles, mumps, small-pox, chicken-pox, whooping cough, diphtheria, cerebrospinal fever, guinea worm, filariasis, tetanus, acute rheumatic fever, rabies, relapsing fever, acute poliomyelites, sepicæmia, gonorrhoea, syphilis.

Tropical diseases :—Malaria, cholera, sprue, plague, kala-azar.

Treatment :—

Prophylactic and curative.

Precautions against transmission of infectious disease.

Disinfection of clothes and room.

Compulsory notification.

Diseases of the Skin.

Symptoms of skin affection. Treatment—general and local. Skin diseases: Eczema, psoriasis ringworm, scabies, impetigo. Treatment and nursing care.

Surgical Nursing.

(20 Lectures.)

Brief outlines of the evolution of Modern Surgery with particular reference to asepsis and bacteriology.

Inflammation : acute and chronic—cardinal symptoms, pathology, terminations and treatment. Suppuration, ulceration and gangrene with detailed consideration of prevention and treatment of bed sores.

Infection : Bacteria varieties—including pathogenic and non-pathogenic and their distribution in nature. Fermentation and putrefaction.

Methods of cultivating and destroying the bacteria outside the body.

Common surgical infections : Local septic conditions, General septic conditions ; immunity (active and passive), sera and vaccines.

Wounds and infection : Treatment of accidental wounds—control of hæmorrhage and infection.

Tetanus.

Hæmorrhages—varieties, recognition and arrestof hæmorrhages, special disease with bleeding tendency e.g. hæmophilia.

Pressure points.

Surgical shock : varieties, factors in production and the prophylaxis and treatment of same.

Burns and scalds with special reference to prevention of complications and use of skin grafting.

Tuberculous disease of bones, joints and glands.

Sprains, fratures and dislocations : Mode of production, signs and symptoms of fracture, complications and healing of fractures. Principles governing treatment of fracture setting, immobilisation, massage and movements.

Extensions and plasters.

New growth benign and malignant.

Surgical technique : Asepsis and antisepsis, heat and other methods of sterilisation, Pre-operative preparation of (*a*) surgeon and his staff, (*b*) preparation of patient, (*c*) surgical instruments, utensils, gowns, dressings, etc., Linen required.

Irrigation of bowels, stomach, throat, nose, ears and eyes.

Preparation for intravenous and subcuteneous infusions; blood transfusion and venesection.

Aspiration, tapping, lumbar puncture. Bladder irrigation.

Operation theatre : Position, lighting ventilation, heating equipment, accessory rooms for sterilisation of linen, etc. ; ligatures, sutures, needles, lotions and drainage tubes.

Anæsthesia : principles and things to be kept ready for anæsthesia : general, spinal, local, rectal, intravenous ; preanæsthetic medication, anæsthetic coæplications.

Post operation care.

Regional Nursing and Operations.

Operation on the head : pre-operative and post-operative care ; nursing and observation of intracranial injury.

Operations on lip, palate and mouth cavity ; hare lip, cleft palate and tongue operations.

Operations on the neck : Intubation, tracheotomy, excision of glands and thyroid operations.

Operations of the chest : Operation on the pleural cavity and lungs : Pleurotomy and drainage for empyema, breast conditions—acute mastitis and mammary abscess radial excision of breast carcinoma.

Abdominal operations : General and pre-and post-operative care of laparotomy—possible complications.

(*a*) Stomach and duodenum : Gastric and duodenal ulcers ; carcinoma stomach—stomach wash ulcer diet—operations, gastrostomy.

(*b*) Biliary apparatus : Operations on the gall-bladder—cholecystostomy and cholecystectomy and on the biliary passages. Special care of Jaundiced patient.

(*c*) Intestinal canal : herniotomy for ordinary and strangulated hernia, colostomy.

(*d*) Rectum and anal canal : prosetoopy—position for and injection therapy of piles ; operations for piles, fistula.

Urinary system : Total quantity and character of urine—examination of urine.

(*a*) Operations of the kidney.

(*b*) Operations of the bladder and prostate.

Spinal column : fracture, tuberculosis and tumour with special reference to care of a case with paraplegia.

Ear, nose, and throat : tonsillectomy, peritonsillar abscess, submucous resection of the septum myringo tomy, mastoid operations.

Eye operations : General care of an operated case, particularly a cataract operation.

Gynaecology.

Structure and functions of the ovaries ; fallopian tubes, uterus vagina. Disorders of menstruation and menopanse. Vaginal discharges. Inflammation of genital tract. Displacements. Early recognition of cancer of Uterus.

Preparation of patients for examination.

Vaginal douches. Tampons. Plugs, pessaries.

Care before and after vaginal operations, perineorraphy and dilatation and curettage.

Nursing of the major and minor operations.

Venereal Diseases.

Common diseases like syphilis, gonorrhoea and soft sore. Care of self and patient.

Note.—Candidates will be expected to have a knowledge of the special ear, nose and throat, eye and gynaecological instruments in common use, besides those generally used in general surgery ; and to have a knowledge of the treatment and nursing care of important surgical conditions.

PART I-A—ASSISTANT NURSES.

Syllabus for the First Examination—Group A.

(1) *Practical Nursing.*

Method of cleaning. Care of linen. Removal of stains. Care of rubber goods. Care of the patient. Bed bath ; lifting and turning in bed. Care of mouth, eyes, hands and feet ; care of hair, washing long hair in bed ; treatment of a verminous head.

Method of feeding patients in bed. Bed sores—causes, signs and symptoms, prevention. Temperature, pulse, respiration, charting. Simple enema. Uses of ice cap, hot water bottle, air ring, water bed, bed rest, bed blocks, bed tables. Uses of common instruments and methods of sterilisation, e.g., dissecting forceps, artery, forceps, cheatless forceps, sinus forceps, probe, tongue depressor, spatula, scalpel, surgical scissors, catheters. Weights and measures. Simple abbreviations. Aseptic technique of dressing a wound. Bed-making. Making an occupied bed. Operation bed. Bandaging. Padding splints. History of Nursing. Ethics. Disposal and disinfection of soiled linen, dressing and excreta. Care of the mouth, teeth, and method of cleaning Enemas—Turpentine and Anthelmatic. Care of the Bed-pans and urinals.

(2) *Anatomy and Physiology.*

The structure of the Human body.
The functions of the body, applied to the normal.

(3) *Nutrition.*

The purpose of food. Types of food and accessory food factors.
Preparation and serving of food.
Principles and method of simple cookery.

(4) *Hygiene.*

The laws of healthy living as these affect the individual and the community, and as applied to the home.

The maintenance of health.

The importance of promoting good health.

The factors which cause deterioration in health and how these may be dealt with by the individual, in the family and in the community.

(5) *First Aid.*

The principles and practice of first aid in the street, the home and the hospital.

SYLLABUS FOR THE FIRST EXAMINATION—GROUP B.

Theory and Practice of Nursing.

Admission of patients.

Positions used in Nursing.

Care of helpless and incontinent patients.

Enemata, Rectal Saline, Flatus tube.

Care and custody of medicines.

Giving medicines.

Preparation of lotions in common use.

Collection of specimens.

Fomentations—Surgical and Medical, Inhalations by steam kettle, inhaler, steam tent, oxygen apparatus. Duties of night nurse. Giving and receiving reports.

Revision of practical nursing taught in the syllabus for the first examination —Group A.

SYLLABUS FOR THE SECOND EXAMINATION.

(1) *Theory and Practice of Nursing.*

Preparation for throat, rectal and vaginal examination, swabbing and bathing of eyes.

Local applications—Compresses, poultices, plasters, liniments, ointment.

Preparation for plaster of Paris. Swabbing and douching vagina. Bowel wash.

Sponging patient for reduction of temperature.

Observations and disposal of urine, faeces, sputum and vomit.

Simple urine tests. Care of the dying and last offices.

Catheterisation. Bladder wash.

Stomach wash, eye irrigation and instillation of drugs. Mustard Bath.

(2) *Medical Nursing.*

(*a*) Main features of diseases.

(*b*) *Introduction.*—The characteristics of the body in health. The factors which contribute to or cause ill health. The importance of the early recognition of the signs and symptoms of disease.

(*c*) *Infection.*—Cause. Predisposing factors. Modes of transmission of infection. Incubation period and symptoms of onset of the commoner infections.

(*d*) *Diseases of Social Importance.*—Information the community should have in regard to tuberculosis, venereal diseases and cancer.

(*e*) *Immunization.*—How immunity is acquired. Information parents should have regarding the protection of their children against the diseases for which artificial immunization is available.

(*f*) *Nursing care in Disease.*—The symptoms and signs met with in disease and disorders which commonly affect the various systems of the body and the nurse's duties as regards nursing care and observation. General care of the comfort of patients. Prevention of bedsores. The importance of providing occupation and of getting patients up. Special aspects of disease in old age and in the chronically ill.

(*g*) *Nursing Care of Sick Children.*—The symptoms and signs of minor ailments and the common infections of childhood. Routine nursing care and observation. Bathing, feeding, clothing, and importance of habit training of infants and children.

(3) *Surgical Nursing.*

Surgical cleanliness and Surgical Nursing care. Asepsis and antisepsis. Sterilization of articles of common use.

Disinfectants in common use. Disinfection. Preparation for Surgical dressing performing simple dressing. Preparation of patients for general anaesthetic. Care of patients for general anaesthetic. Care of patient recovering from anaesthetic.

PART II.

Syllabus for Midwives.

Syllabus for the 18 months' course.

(A) During a period extending over not less than the firs six months of her training he candidate shall—

(*i*) receive theoretical and practical instruction in the elementary principles of general nursing, the use of nursing appliances and the method of taking and

recording the pulse-rate, the temperature and the respiration-rate and the use of sphygmomanometer ;

(*ii*) attend a course of theoretical and practical instruction in General Anatomy and in the following subjects :—

(*a*) General Physiology ; the principles of Hygiene and Sanitation as regards home, diet and person ; the midwives' part in spreading better knowledge of hygiene among women she attends.

(*b*) Infection, its cause and the means taken to prevent it ; asepsis ; antiseptics in Midwifery and the way to prepare and use of them ; the disinfection of the person, clothing and appliances ; the use of rubber gloves and masks and the conditions in which it is advisable to use them.

(B) During next twelve months of her training the candidate shall attend a course of at least 32 lectures in the following subjects extending over a period of not less than six calendar months :—

(*c*) The Anatomy and Physiology of the Female Pelvis and its organs and of the breasts.

(*d*) The Physiology, diognosis and management of normal pregnancy, the hygiene and care of pregnant women and the uuborn child, pelvic measurement, examination of the urine, estimation of blood pressure and the significance of the findings thereof.

(*e*) The symptoms and signs suggesting departure from the normal in pregancy.

(*f*) The Physiology, mechanism and management of normal labour.

(*g*) The symptoms and signs suggesting departure from the normal in labour.

(*h*) The Physiology and management of the puerperium including the taking and recording of the pulse-rate, the temperature, and the respiration rate, the use of nursing appliances.

(*i*) Hoemorrhages complicating pregnancy, labour and puerperium, emergency treatment of patients suffering from loss of blood.

(*j*) Other obstetric emergencies and their management by the midwife until the arrival of the doctor ; preparation before the doctor's arrival and assistance during his attendance.

(*k*) Complications of the puerperium including puerperal fevers, their nature, causes, prevention, symptoms and signs ; precautions adopted to prevent the spread to other patients.

(*l*) The care of the breasts under both normal and pathological conditions ; the recognition of disturbance of their functions.

(*m*) The Physiology, Hygiene and management of the child (including the establishment and maintenance of breast-feeding) with special reference to the first month of life.

(*n*) The care of children born apparently lifeless ; the management of premature, weakly and abnormal children.

(*o*) Signs of the diseases which may develop during the first month after birth, with special reference to ophthalmia neonatorom and the responsibilities of the midwife in connection therewith and to skin eruptions and in particular pemphigus, congenital deformities for which immediate or early treatment may be essential, or beneficial, e.g., imperforate anus or club foot.

(*p*) The venereal diseases (Syphilis and Gonorrhœa) in women and young children; their symptoms, signs and dangers and the risks of contagion; the widwife's responsibilities for advocating early and continued treatment.

(*q*) The use of such drugs and solutions as may be required in practice; the conditions which call for their use; their dosage and strength; the mode of administration or application and their danger.

(*r*) The duties of the midwife as described in the by-laws of the Council including the proper manner of keeping the Register of cases and other records and filling in forms; the relation of the midwife to the various health authorities and her co-operation with voluntary Health Agencies.

(*s*) The symptoms and signs of cancer of breasts and cancer of the womb and the part the midwife can play in pursuading women to seek advice early when suspicion is aroused.

(*t*) Maternal mortality, Neonatal mortality and still-births; the meaning of these terms and the steps taken to reduce such mortalities.

(*u*) Obstetric operations.

(*v*) Receive instruction in the prevention and treatment of Ophthalmia Neonatorom.

At least five of the lectures and some of the practical demonstrations must be on the subjects enumerated (*m*) and (*n*) and at least two of the lectures must be on the subjects enumerated (*r*).

Syllabus for the 15 months' and 9 months' Course.

The same course as prescribed in sub-clauses (*c*) to (*v*) of Clauses (B) above.

PART II-A.

Syllabus for Assistant Midwives.

(1) General and Elementary principles of Hygiene, Sanitation and Nursing.

(2) Infection occurring in Midwifery, its cause and means to prevent it.

(3) A course of 20 lectures supplemented by practical demonstrations, on the following subjects :—

(*i*) Elementary Anatomy and Physiology of Female Pelvis and its organ and of the breasts. The fœtal Skull and the Placents.

(*ii*) Signs and symptoms of Pregnancy.

(*iii*) Antenatal care, diet during pregnancy, Hygiene of pregnancy. Examination of Urine, and preparation for confinement.

(*iv*) Mastitis, abscess and cancer of breasts.

(*v*) Management of normal labour.

(*vi*) Management of Puerperium including the taking of pulse, temperature and use of the catheter.

(*vii*) Abnormal Pregnancy—Hyperemesis Gravidarum. Toxæmias. Abortion Vesicular Mole. Tubal Pregnancy. Hæmorrhages. Placenta Prævia. Accidental Hæmorhages.

(*viii*) Abnormal labour—(*a*) Child :—Occipito. Posterior position. Face, Brow, Breech Transverse and compound presentation. Presentation and prolapse of cord. Mother :—Uterine Inertia ; Abnormalities of soft parts, obstructed labour. Rupture of Uterus. Postpartum Hæmorrhage, Disproportion and contracted Pelvis.

(*ix*) Abnormal Puerperium—Physiology and management.

(*x*) Obstetric Operations—Catheterization. Vaginal Douching. Plugging. Sterilisation of instruments and syringes. Cæsarian Section. Pubiotomy and destructive operations.

(*xi*) The Infant—Its management. Breast feeding. Artificial feeding. Care of premature infant. Asphyxia, varieties and treatment. Congenital deformities and birth injuries. Ophthalmia Neonatorom and minor ailments. Invalid Cookery. Preparation of artificial food.

(*xii*) The venereal diseases in pregnant women and infants. Signs and symptoms and dangers and risks of contagion.

(*xiii*) The use of such drugs as may be required in practice, the condition which call for their use, the mode of their administrations or application and their danger.

(*xiv*) Directions to Midwives concerning their person, instruments, etc., their duties to patients and child and their obligations with regard to disinfection medical assistance and notification.

PART III—Syllabus for the Health Visitors.

Candidates shall be required to have only a general knowledge of the various parts of the following subjects excepting maternity and child welfare work and antenatal care of expectant mothers and postnatal care.

Candidates shall be required to attend ¾th of the number of lectures given and 4/5th of the practical demonstrations.

A.—For Probationers who are not registered as nurses in Part 'A' or Part 'C' of the Register, or who have not passed the Examination in General Nursing, Part I, of the Council.

I.—Elementary Anatomy and Physiology—12 Lectures in each.

The Skeleton :

Bones of the Skull and their position. Points to notice about the bone of th skull, especially in a Baby's Skull. Bones of the Vertebral Column. Structure

of a Vertebra. Classification of the vertebral bones. Ribs, classification of the Ribs. Shoulder girdle. The Pelvis. Bones of the Armed Leg.

2. Bones and Joints :

Classification, composition and structure of bones. Cartilages. Ligaments. Tendons. Joints. Description of the Shoulder joint, hip joint, elbow joint, knee joint and joints of the Ankle and the Wrist, Pivot joint, Imperfect Movable joint.

The Muscular System :

Muscles. Structure and attachment of a voluntary muscle. Nourishment of the muscle. Nerves controlling the movement of a voluntary muscle. Tendons. Involuntary muscle, its structure and movement. Position of the Internal Organs. The Diaphragm.

4. The Lungs and Air Passages :

Air passages, structure of the air passages. Structure of the lungs. Function of the lungs. Respiration and how it is brought about. Capacity of the lungs.

5. The Heart :

Appearance and Function of the Heart. The Pericardium. Chambers of the Heart. Valves between the auricles and the ventricles. Semi-Lunar Valves. Vessels entering and leaving the Heart. Observations about blood vessels. Beats and sounds of the Heart.

6. Circulation of Blood :

Kinds of blood vessels. Structure of the walls of Arteries and Veins. Valves of the veins. Capillaries. Circulation—Pulmonary, Coronary and Portal. Reasons and Proof of the circulation. Pulse.

7. The Blood :

Composition of blood and plasma. Use of plasma. Red and white corpuscles and their origin and functions. Clotting of blood. The Lymphatic System. Glands ; their structure and functions.

8. The Teeth and Digestive Organs :

Number of Teeth. Structure of a tooth. Functions of teeth. The digestive organs. The mouth. The alimentary canal. Structure of the walls of the alimentary canal. The Oesophagus. The stomach. Small intestines and large intestines.

9. Digestion :

Digestion in the mouth, the stomach, and in the small and large intestines. Changes which the food undergoes. Liver, its structure. Vessels of the Liver. Circulation through the Liver. Functions of the Liver.

10. Excretory System :

The skin and its structure. Sweat glands. Regulation of the temperature of the body by the skin. Sabaceous glands. Kidneys, their struture and functions.

Vessels of the kidney. Blood supply of the kidney. Composition of urine. The Ureters, Bladder and Urethra.

11. Brain and the Nervous System :

Brain and its parts. Membranes covering the Brain. Functions of the Brain. Spinal Cord and its functions. Nerves and their functions. Nerve Centres.

12. Reproductive Organs :

Uterus, its structure and function. Walls of the Uterus. Vagina. Fallopian Tubes. Ovaries, their structure and functions.

Reproductive system of males.

13. Practical Work :

(*i*) Anatomy :—One demonstration in the dissection room and museum on joints, bones, muscles, cartilages, body cavities with their contents and brain.

(*ii*) Physiology :—Three demonstrations showing normal contents of blood under a microscope, Urine test for albumin, and Blood Pressure.

Note.—A probationer who has passed the examination in General Nursing—Part I (Group A)—shall, at her option, be exempted from attending these lectures.

II-A.—First Aid—12 Lectures.

1. Outlines of First-Aid.

2. Bandages—the triangular bandage and its application.

3. Fractures—in general—their causes, varieties, signs, symptoms and treatment. Special—Causes, signs, symptoms and treatment. Use of Thomas Splint.

4. Injuries to joints and muscles.

5. Wounds and Haemorrhage.

6. Injuries to Internal Organs.

7. Miscellaneous Injuries—
   (*a*) Scalds and Burns.
   (*b*) Stings of plants and insects.
   (*c*) Wounds by poisoned weapons, and bites of snakes and Rabid animals.
   (*d*) Frost-bite.
   (*e*) Needle embedded under the skin.
   (*f*) Foreign body in the Eye.
   (*g*) Foreign body in Ear-passage.

8. Artificial Respiration—different methods.

9. Asphyxia :—Drowning, strangulation, hanging, choking, Electric shock.

10. Insensibility.

11. Poisons.

12. Transport of injured persons.

II-B.—Home Nursing—12 Lectures.

1. Introductory.

2. Choice and preparation of a Sick-room.

3. Ventilation and Warming.

4. The Bed and Bed Making.

5. General details in nursing.

6. Feeding of the sick.

7. The giving and care of Medicines.

8. Local applications—
   (*a*) Preparing poultices.
   (*b*) Preparing plasters.
   (*c*) Preparing fomentations.
   (*d*) Preparing enemata.

9. General nursing of Infectious fevers.

10. Infectious Diseases :—Influenza, Pneumonia, Tuberculosis, Plague, Malaria, Dengue Fever, Measles, Mumps, Whooping Cough, Chicken-Pox, Diphtheria, Diarrhoea, Small-Pox, Cholera, Dysentery, Enteric Fever.

11. Surgical Nursing.

12. Nursing of Children.

13. The Roller Bandage and its application.

14. The Household Medicine Cupboard.

15. Two demonstrations in bed making and general details of nursing, one demonstration in local applications, three demonstrations in Bandadging and one demonstration in feeding the sick.

2-B.—For all Probationers.

I-A.—Elementary Hygiene—16 Lectures.

1. Personal Hygiene :—Meaning of Health, exercises. Muscular and skeletal system. Posture. Hygiene of Respiratory system. Breathing exercises. Hygiene of the Excretory system. Care of skin. Clothing. Simple laundry work ; washing of woolies. Protection of clothes and other articles against pests and insects. Kidneys and Intestines as organs of elimination.

Hygiene of nervous system :—Rest and sleep.

Hygiene of Eye, Ear, Teeth, Nails and Hair.

2. General Hygiene in Towns and Villages :—
   (1) Housing—Site, aspect, materials. Space round dwelling. Types of houses and huts.

(2) Air and Ventilation—Composition of air. Contamination. Effects of crowding. Purification of air. Ventilation of rooms, cooling power. Humidity. Dust. Sunlight.

(3) Heating and lighting—Method of heating; materials, methods of lighting, advantages and disadvantages.

(4) Water:

(*a*) Varieties—Pure, suspicious and impure.

(*b*) Sources—Wells, Springs, Rain, Upland surface water and River water.

(*c*) Characters of various waters—Main springs, deep wells, Upland surface water and Rain water.

(*d*) Storage of water—Public and Domestic.

(*e*) Contamination of water—

(i) General supply—by water borne diseases,

(ii) Household supply—by action of water on metals.

(*f*) Means of purifying water—

(i) Public scale—sand filters or Anderson's scrap iron process,

(ii) Domestic ways—boiling or chemical method. Germ filters—Pasteur—Chamberlane and Berkfield filters.

(*g*) Hard water, Temporary and Permanent.

Methods of softening: Boiling, Clarke's process, Caustic Soda.

(5) House Drainage—Sewage and conservancy; refuge disposal. Sanitary fittings including closets.

(6) Dairies and Cow-sheds—Water supply; lighting and ventilation of cow-sheds; collection and removal of refuse and dung: clean production storage and distribution of milk products.

B.—Dietetics.

(*a*) *Diet and Nutrition—10 Lectures.*

I.—Food.

1. Necessity of Food:

The human machine; wear and tear; Growth and repair; Production of heat and work; Supply of body regulators; Vitamins Enzymes; Catalytic Agents.

2. Chemical nature of food and our body:

Proteins; Fats; Carbohydrates; Salts; Vitamins; Water.

3. Digestions; Absorption; Assimilation.

4. Food requirements:

Calories; Basal metabolism; Protein; Fat; Carbohydrates, Salts; Water; Vitamins; Enzymes; Animal and vegetable proteins and fats; Roughage; Flouring agents.

5. Forms of Food: Perfect Food:—

Milk; Eggs; Meat; Fish; Bread; Fats and oils; Sugars; Starches; Vegetables; Fruits; Biological value; Economical value; Food combinations.

6. The essentials of a Good Diet:

(1) Proper heat value,

(2) Proper proportion of proteins, fats, etc.,

(3) Proper amount of vitamins,

(4) Palatable; appetizing, well cooked, satiability, Digestibility.

7. Vegetarian, Non-vegetarian Diet, Economic Value of a Diet :

In childhood, growing periods, youth and old age, pregnancy and lactation, calories at different periods, nature of work, climate, proper elimination of waste products ; exercise, fresh air, sunlight, cleanliness, freedom from infections.

8. Deficiency Diseases :

Mal-nutrition, salts of calcium, phosphorus, iron, iodine, etc., vitamin deficiency A to K, constipation, Rickets.

9. Diseases due to excess of Food.

Obesity of proteins and carbohydrates ; Idicaynoracie Fattening and reducing diets.

10. Changes produced in cooking foods.

11. Preservation of food :
   (*a*) Drying.
   (*b*) Freezing.
   (*c*) Salting.
   (*d*) Antiseptics.
   (*e*) Sterilization by Heat.

12. Tinned foods.

13. Food poisoning.

14. Colouring agents for food.

II.—Milk.

1. Composition percentage—Human milk, Cow's milk, the difference.

2. Substitute for Human milk.

3. Sterilisation of milk—
   (*a*) Sterilisation.
   (*b*) Pasteurisation.

4. Legal standard of milk.

5. Diseases communicated by milk.

6. Condensed milk.

7. Dried milk.

(*b*) *Invalid Cookery—12 Classes.*

Invalid Cookery :

1. Dal Soup.
2. Vegetable.
3. Boiled rice pudding.
4. Boiled custard.
5. Sago pudding.
6. Suji (Boiled).
7. Arrowroot.
8. Benger's food.
9. Peptonized milk.
10. Imperial drink (Lemonade).
11. Barley water.
12. Albumen water.

II-A.—Public Health Administration and Sanitary Law—8 Lectures.

General description of the organisation of Local Self-Government in the Province, City, Town and Rural Areas.

Public Health Administration :

Public Health Officials and their duties. The duties and powers of Health Visitors.

Housing : Site, aspect, materials.

Town Planning :

Suppression of nuisances ; laws concerning nuisances and responsibilities of the Local authorities in abating them.

Inspection of foodstuffs.

Offensive trades and occupation involving special risks.

Legislation regarding :—

(*a*) Food adulteration.

(*b*) Control of milk supply.

(*c*) Infectious and Epidemic Diseases.

(*d*) Housing and Town Planning.

(*e*) Laws relating to protection of women, children and young persons in India.

(*f*) Factory and Mines Acts as regards employment of women and children.

Note.—Particular attention should be drawn to the following :—

(1) Bombay Maternity Benefit Act, 1929.

(2) Indian Mines Act, 1923.

(3) Bombay Children Act, 1924.

(4) Factories Act, 1934.

B.—Tropical Infectious and Communicable Diseases—12 Lectures.

Short general introduction with definition of the following terms :—

I. Infection—

Contagion, Epidemic, Pandemic and Sporadic Diseases. Congenital and acquired diseases. Immunity, " Carriers " Prophylaxis.

II. Life History of :—

Mosquitoes, Common House-fly, Rat-Flea, Pulex-irritant.

III. Disinfectants :—

Definition and classification ; methods of Disinfection ; Disinfection of a sick room, clothes bedding, utensils and excreta.

IV. Diseases classified according to routes of infection :—

Brief description of a case, the methods of transmission, prevention of spread (domestic and public health measures).

Classification :—

(*a*) Air-borne.

(*b*) Water-borne.

(*c*) Insect-borne.

(*d*) Others.

V. Special Public Health Scheme for combating the spread of Tuberculosis, Leprosy and Venereal Diseases.

III-A.—Antenatal and Postnatal Care—12 Lectures.

(1) Antenatal Care—

The significance and objects of antenatal care.

The antenatal clinic and visiting in the homes.

Signs and symptoms of pregnancy; examination of patients; Hygiene of pregnancy.

Complications of pregnancy; contracted pelvis, anaemia, haemorrhage, toxaemias, malpositions of the Uterus, Fevers, Bowel diseases.

Syphilis, gonorrhoea and tuberculosis in relation to pregnancy. Abortion and still-birth.

Preparations for confinements.

Prevention of pueperal Sepsis.

(2) Postnated Care—

(*a*) Importance of methods of obtaining postnatel examination.

(*b*) Disabilities following child-birth and general lines of treatment.

(*c*) Care of the nursing mother.

(*d*) Cause and prevention of puerperal sepsis.

B.—Infant and Child Care—12 Lectures.

The care of the newly-born infant.

The general development and care of the normal infant.

Breast-feeding; Anatomy and Physioligy of the Breast.

Preparation for breast-feeding, composition and Chemistry of breast milk, feeding intervals. Wet nursing. Complimentary feeds. Weaning.

Artificial feeding: Cow's and Goat's milk, methods of modification. Dried milk. Digestion of protein, fat and carbohydrate. Bottle feeding. Precautions in the use of milk. Testing of milk.

Infants :—

The premature baby.
Disorders of the stomach and intestines.
Disorders of nutrition.
Disorders of nutrition.
Disorders of the respiratory Tract.
Skin affection.
Prevention of eye and ear disease.
Abormalities.

Toddlers :—

General development and care of the child from 1-5.
Ailments in the child of 1-5.
Training of Infants and Toddlers.

C.—Organisation of Maternity and Child Welfare Work—6 Lectures.

1. The history of Child Welfare movement.
2. The aim of Child Welfare movement.
3. The Child Welfare Centre and its work.
4. Duties of Health Visitor at the Centre and Home Visiting.
5. Other activities of a Health Visitor.
6. Vital statistics.
7. Record keeping at the Centre, as to number of Registers, Cards, etc., kept at the Centre.
8. Teaching of Card Index system.
9. Book keeping and report writing.

IV.—Simple Economics and Industrial Hygiene —10 Lectures.

1. The struggle for existence.
2. Development of Economic life up to the present day. Taxation in general terms.
3. Labour as a factor of production—Indian Labour Problems.
4. The wage problem.
5. The woman as a worker.
6. The protection of the worker by Law.
7. Agricultural production in India.
8. The family budget.
9. Indebtedness and poverty.
10. Co-operation.

V.—Child Psychology—9 Lectures.

Mental hygiene of Childhood :—

General introduction—Relation of mental hygiene to Health Visitor's work. Interaction of mind and body. Unconscious mind. Repression. Suggestion.

Definition of mind—conscious, unconscious, intelligence instinct, emotion, interaction of mind and body.

Psychology development during first five years. Habit formation. Development of the senses. Development of the intellect. Children's questions.

Value of play. Social development. Common psychological difficulties. Problem of Weaning, feeding problems, sleeplessness, temper biting, enuresis, constipation, etc.

Value of Nursery School.

SCHEDULE IV.

RULES FOR CONDUCTING THE EXAMINATIONS HELD BY THE COUNCIL.

(1) *General Rules.*

1. Examinations will be held at Bombay and at such other places as shall be determined by the Council from time to time.

2. When there are more than one Centre for a written examination, question papers shall be given to candidates on the same day and at the same time at every Centre.

3. Candidates can appear at any of the Centres determined by the Council, with the written permission of the Heads of their Training Institutions. The Head of the Institution may grant permission to a candidate to appear at a Centre, other than the one nearest to the Institution, only after a careful inquiry into the candidate's reasons for selecting such a remote centre. The reasons should be reported to the Council.

4. Candidates must forward their applications to the Registrar, through the head of their Institution, three weeks before the commencement of an examination, along with the necessary fees :

Provided that the demobilised nurses who are enrolled by the Council under the third proviso to clause (*a*) of sub-rule (1) of rule 19 and registered Auxiliary Service Nurses may forward their applications to the Registrar direct, if they have not joined any training institution ;

The applications shall be in the prescribed form attached hereto and no application that is not complete in every respect will be accepted.

5. Examination fees once paid shall not be refunded or held in reserve for a future examination except when the candidate dies before the date of the examination, or when she is ill, in which latter case a medical certificate from a registered medical practitioner must be sent to the Registrar so as to reach him before the actual day of the examination.

6. No candidate shall be admitted to an examination until she shall have attended one or more recognised training Institutions for the prescriebd period and unless she produces satisfactory testimonials in the prescribed forms attached hereto :

Provided that in special cases, the Council shall have power to grant recognition to examinations of other Nursing Councils or Examining Bodies and training taken in hospitals approved by such Bodies, or in hospitals in States which have formed part of the Province of Bombay or over which the jurisdiction has been transferred to the Government of Bombay under the Extra Provincial Jurisdiction Act, 1947, prior to such merger or transfer of jurisdiction, and to allow service put in by nurses and midwives in emergency camps or hospitals established by Government and approved by the Council, or in hospitals in such States, prior to the merger or transfer of jurisdiction, to be counted as training for the purposes of admission to any examination, on the merits of each individual case.

Provided further that the demobilised nurses who are enrolled by the Council under the third proviso to clause (*a*) of sub-rule (1) of rule 19, and registered Auxiliary Service Nurses shall be admitted to the examination without being required to join a training institution, or producing the testimonials in the prescribed form, if their training and service computed as training under the provisos to sub-rule (1) or rule 20 or the proviso to sub-rule (1) of rule 20-A, as the case may be, amounts to the period of training prescribed in that behalf.

7. A candidate who has satisfied all the requirements of the prescribed courses of studies at her Institution, including the necessary minimum attendance, but who has not appeared for the examination subsequently through any other recognised Institution and who wishes to appear at the examination shall, on payment of the

prescribed fees, be admitted to that examination if she has been on a previous occasion admitted to that examination (or recommended for such admission by the head of the recognised Institution which she last attended), provided that she produces a certificate to that effect from the head of the recognised Institution.

8. A certificate from the Examining Board testifying to the candidate's having passed the examination in Nursing Part II, the examinations in Male Surgical Nursing, the Final Examinations for Health Visitors or the examinations for Midwives and Assistant Midwives will be issued free of charge in the Form "D" given in Schedule II. It shall be transmitted to the candidate through the Head of the Institution from which she appeared for the examination.

9. A copy of the certificate, testifying that a candidate has passed an examination held by the Council, will be issued by the Registrar on payment of a fee of Rs. 2.

10. A statement showing the marks obtained by a candidate in each head of passing will be supplied on payment of a fee of Rs. 2 per examination.

Marks obtained by a candidate for answers to individual questions will not be supplied.

11. Information as to whether a candidate's answers under any particular heap or heads have been examined and marked, will be supplied to the candidate on her forwarding within six weeks of the declaration of the results of the examination, an application accompanied by a fee of Rs. 10 for each head. The fee is only for verifying whether a candidate's answer under any particular head have been examined, and not for the re-examination of the answers. The rule that marks obtained by candidates in individual questions cannot, in any circumstances, be supplied, holds good in the case of applications for the verification of marks.

If as a result of the verification made under this rule, it is discovered that there has been either an omission to examine or mark any answer or answers, or that a mistake has occurred in the totalling of the marks, the fee for verification shall be refunded to the applicant.

12. Failure to pass an examination will not disqualify a candidate for presenting herself on a subsequent occasion and on the submission of a new application and the payment of a fresh fee, except for the Preliminary Health Visitors' Examination for which a candidate failing twice will not be allowed to continue her training.

Every failed candidate wishing to re-appear for the Midwives and Assistant Midwives' examination shall put in a fresh-term of two months' practical course in Midwifery at an approved and recognised institution.

Every failed candidate wishing to reappear for the Advanced Diploma Examination for Midwives shall put in a fresh term of 2 months' training at an approved and recognised institution.

Candidates who have failed in the examination for Midwives, shall, however, be allowed to sit for the Assistant Midwives' Examination without being required to take any further training.

(2) *Examination for Nurses.*

1. There shall be two examinations, *viz.*, in Part I and Part II, for probationers training for a nurse's certificate.

2. The examinations shall be written, oral and practical and shall be conducted in English, Marathi, Gujarati, Kannada, Hindi or Urdu.

3. The examination in Part I shall be in the subjects detailed in Part I of Schedule III to the Rules and shall be divided into the following two Groups, namely :—

Group A	.. ..	(1) Elementary Anatomy. (2) Elementary Physiology.
Group B	.. ..	Elementary Nursing and Bandaging.

N.B.—(*a*) Candidates can either appear at the examination in Group A first and then in Group B, or both the Groups can be taken simultaneously.

(*b*) No candidate shall be eligible for admission to the Examination in Group A until she has—

(*i*) completed in a recognised institution, a period of training of not less than 12 weeks' duration if she has no regular ward duties and of 24 weeks' duration, if she has regular ward duties, inclusive of the period of any leave granted to her by such institution ;

(*ii*) attended at least 80 per cent. of the lectures and practicl demonstrations in each subject , or put in not less than 5/6ths of the period of training specified in sub-clause (*i*), exclusive of leave ; and

(*iii*) if she has had no regular ward duties, produced a certificate of having taken 2 weeks' practical training in the wards of a recognised hospital, with 2 hours' duty per day and of having passed a test in Elementary Nursing and Bandaging held by the training institution.

(*c*) No candidate shall be eligible for admission to the examination in Group B, until she has—

(*i*) completed in a recognised institution a period of training of not less than one year's duration *inclusive* of the period of training under sub-clause (*i*) of clause (*b*) and of the period of any leave granted to her by such institution :

Provided that an Auxiliary Service Nurse shall not be permitted to appear for the examination unless the total period of her Auxiliary Nursing Service training and Military service computed under proviso to sub-rule (1) of rule 20, plus the period of training taken by her at a Hospital recognised by the Council, amounts to 18 months or more ;

Provided further that a Nurse registered in Part C of the Register shall not be permitted to appear for the examination in Male Surgical Nursing which shall be held twice a year on the first Mondays in February and August, unless she produces a certificate from an approved training institution that she has put in six months in the adult male medical and surgical wards of that institution or a certificate either from the Director General, Health Services of India, or from the Superintendent, Indian Military Nursing Service, that she was a member of the Service and had worked for a period of not less than six months in the adult male medical and surgical wards of a Military Hospital to the satisfaction of the authorities concerned ;

(*ii*) attented at least 80 per cent. of the lectures and practical demonstrations in each subject ; and

(*iii*) put in not less than 11/12ths of the period of training specified under sub-clause (*i*) exclusive of leave :

Provided further that the Demobilised Nurses who are enrolled by the Council under the third proviso to clause (*a*) of sub-rule (1) of rule 19 and who have passed the 2nd grade nursing certificate examination of the Indian Army Medical Corps

or Nursing Orderlies Class III cetificate examination of the Royal Army Medical Corps or Sick Berth Attendants Class I certificate examination of the Indian Navy or Medical Assistants (Nursing)—Leading Aircraftsman or Aircraftsman Grade I certificate examination of the Indian Air Force, shall not be permitted to appear for the examination unless the total period of training and service computed under the second proviso to sub-rule (1) of rule (20), plus the period of training taken by them at a hospital recognised by the Council amounts to 18 months or more ;

(*d*) The examination in Group A shall be held four times a year on the fourth Monday in February, May, August and November, provided that if the date on which the examination is to be held is a public holiday the same shall be held on the succeeding working day.

(*e*) The examination in Group B shall be held twice a year on the fourth Monday in February and August, provided that if the date on which the examination is to be held is a public holiday, the same shall be held on the succeeding working day.

The examination in Part II shall be in Medical and Surgical Nursing and Theatre work as detailed in Part I of Schedule III and shall be held twice a year on the First Mondays in February and August.

N.B.—No candidate shall be eligible for admission to the Examination in Part II, until she shall have completed three years' training, put in one full year's further course of study after passing the examination in Part I, and attended at least $\frac{3}{4}$ths of the number of lectures and 4/5ths of the practical demonstrations in each subject :

Provided that a probationer may be allowed to appear for the examination in Part II not more than three months before the completion of the period of three years' training on the understanding that she must complete the full period before the receipt of her diploma.

Provided further that :—

(1) Auxiliary Service Nurse domiciled in the State of Bombay shall be allowed to appear for the examination in Part II without being required to have passed the examination in General Nursing, Part I, on the following conditions —

(*a*) if she has already passed the Preliminary examination of the United Provinces State Medical Faculty or the Punjab Nursing Council with 40 per cent. of marks in Anatomy, 40 per cent. in Physiology, 40 per cent. in Elementary Nursing, in written and oral separately, and 50 per cent. of the total number of marks in all the subjects. In case she has passed this examination without obtaining such percentge, she shall be allowed to appear in Part II only after she has passed the examination in Group B of Part I ;

(*b*) if she has completed 3 years' training within the meaning of rule 20 ; and

(*c*) if she has after demobilisation completed, not less than 11 months' training in the nursing of women and children at a recognised hospital.

(2) Demobilised Nurses who are enrolled by the Council under the third proviso to sub-clause (*a*) of sub-rule (1) of rule 19, shall be allowed to appear for the examination in Part II without being required to have passed the examination in General Nursing, Part I, if they hold the following qualifications :—

(*a*) Nursing Diploma or 3rd grade nursing certificate of the Indian Army Medical Corps,

(*b*) Nursing Orderlies Class I or II certificate of the Royal Army Medical Corps, or

(*c*) Sick Berth Chief Petty Officers, Petty Officers or Leading Sick Berth Attendants certificate of the Indian Navy.

4. The number of marks for written and oral examinations shall be equal. Candidates shall be required to submit to the Nurse-examiners their training charts at the time of the oral and practical examinations. In marking for the oral and practical examinations, the examiners shall take into consideration the work recorded in these charts.

5. Probationers shall be considered to have passed in the examination if they shall have obtained not less than 40 per cent. of the marks in each subject, viz., 40 per cent. in each written and 40 per cent. in each oral and practical, and not less than one-half of the total marks in all subjects. The percentage of Honours Marks is 70 per cent. in each subject and 75 per cent. of the grand total.

6. (*a*) When re-examined, candidates for the examination in Part I may appear only in the Group in which they have failed.

(*b*) A candidate who fails in the Examination in Part II but obtains 60 per cent. of the marks in any subject shall be exempted, at her option, from appearing in that subject at a subsequent examination :

Provided that such exemption shall not be granted after a period of two years from the date of the examination in which the exemption was earned :

Provided further that any candidate who passes the examination in this manner shall not be eligible for honours, prizes or scholarships.

7. The fee payable by each candidate for each examination or re-examination shall be as follows, namely :—

	Rs.
(*a*) for Part I—	
(*i*) if the candidate appears for examination only in Group A ...	7
(*ii*) if the candidate appears for examination only in Group B ...	5
(*iii*) if the candidate appears for examination in Groups A and B, simultaneously	10
(*b*) for Part II	15
(*c*) for the examination in Male Surgical Nursing	5

(2A) *Examination for Assistant Nurses.*

1. There shall be two examinations for probationers training for an Assistant Nurse's Certificate.

2. The examinations shall be written, oral and practical and shall be conducted in English, Marathi, Gujarati, Kannada, Hindi and Urdu.

3. The first examination shall be in the subjects detailed in Part I-A of Schedule III to the Rules and shall be divided in the following two Groups, namely :—

Group A—(1) Elementary Anatomy.
(2) Elementary Physiology.
(3) Elementary Hygiene.
Group B—Elementary Nursing and Bandaging.

N.B.—(*a*) Candidates can either appear at the examination in the groups separately or can take both the groups simultaneously.

(*b*) No candidate shall be eligible for admission to the examination in Group A until she has—

(*i*) completed in a recognised institution a period of training of not less than 16 weeks inclusive of the period of any leave granted to her by such institution, and

(*ii*) attended at least 2/3 of the lectures and 4/5 of the practical demonstrations and has passed a test in practical nursing held by the training institution.

(*c*) No candidate shall be eligible for admission to the examination in Group B until she has—

(*i*) completed in a recognised institution a period of training of not less than one year's duration inclusive of the period of training under sub-clause (*i*) of clause (*b*) and of the period of any leave granted to her by such institution,

(*ii*) attended at least 2/3 of the lectures and 4/5 of the practical demonstrations in each subject, and

(*iii*) put in not less than 11/12ths of the period of training specified under sub-clause (*i*) exclusive of leave.

(*d*) The examinaion in Group A shall be held three times a year on the 1st Mondays in February, June and October, provided that if the date on which the examination is to be held is a public holiday, the same shall be held on the succeeding working day.

(*e*) The examination in Group B shall be held twice a year on 1st Mondays in February and August, provided that if the date on which the examination is to be held is a public holiday, the same shall be held on the succeeding working day.

The second Examination shall be in Medical, Surgical and Practical Nursing as detailed in Part I-A of Schedule III and shall be held twice a year on the 4th Mondays in February and August every year, provided that if the date on which the examination is to be held is a public holiday, the same shall be held on the succeeding working day.

No candidate shall be eligible for admission to the second examination until she has completed one year's further course of study after passing the first examination :

Provided that the Demobilised Nurses who are enrolled by the Council under the third proviso to clause (*a*) of sub-rule (1) of rule 19, may be permitted to appear at the examination without being required to have passed the first examination if they hold the qualifications given below :—

(*a*) The Nursing Diploma or 3rd Grade Certificate in Nursing of the Indian Army Medical Corps or Class I or II Certificate of the Royal Army Medical Corps ;

(*b*) The Sick Berth Chief Petty Officers, or Petty Officers, or Leading Sick Berth Attendant's Certificate of the Indian Navy.

4. Candidates shall be required to submit to the nurse Examiners their training charts at the time of the oral and practical examinations. In marking for the oral and practical examinations the examiners shall take into consideration the work recorded in these charts.

5. Probationers shall be considered to have passed in the examinations if they shall have obtained not less than 30 per cent. in each written and 40 per cent. in each oral and practical, and not less than 40 per cent. of the total marks in all subjects. The percentage of Honours marks is 70 per cent. in each subject and 75 per cent. of the grand total.

6. (*a*) When re-examined, candidates for the first examination may appear only in the Group in which they have failed.

(*b*) A candidate who fails in the second examination but obtains 60 per cent. of the marks in any subject shall be exempted, at the option, from appearing in that subject at a subsequent examination :

Provided that such exemption shall not be granted after a period of two years from the date of the examination in which the exemption was earned :

Provided further that any candidate who passes the examination in this manner shall not be eligible for Honours, prizes or scholarships.

7. The fee payable by each candidate for each examination or re-examination shall be—

	Rs.
(*a*) for the first examination—	
(*i*) if the candidate appears in Group A or B separately ..	4
(*ii*) if the candidate appears in Groups A and B simultaneously ..	6
(*b*) for the second examination	10

(2B) *Examination for the Diploma in Fever Nursing.*

1. The examination shall be held twice a year on the fourth Mondays in February and August, provided that if the date on which the examination is to be held is a public holiday, the same shall be held on the next working day.

2. The examination shall be partly oral, practical and clinical and partly written and shall be conducted either in English, Marathi, Gujarati, Kannada, Hindi or Urdu. It shall embrace the subjects referred to in clause (*c*) of rule 20-B. There shall be two papers each of three hours' duration. The oral and practical examinations shall cover all practical problems in relation to Nursing of Infectious Diseases.

3. The marks for each paper shall be 75 and for the oral and practical portions 150. In order to pass the examination, candidates must obtain not less than 40 per cent. of the marks in the written portion, and not less than 40 per cent. of the marks in the oral, practical and clinical portions, and not less than 50 per cent. of the total marks for the examination. The percentage for Honours is 70 per cent. in the written and the oral, practical and clinical portions separately and 75 per cent. of the grand total.

4. The fee payable by each candidate for examination or re-examination shall be Rs. 15.

(2C) *Examination for the Diploma in Children's Nursing.*

1. The examination shall be held twice a year on the fourth Mondays of May and November, provided that if the date on which the examination is to be held is a public holiday, the same shall be held on the next working day.

2. The examination shall be partly oral, practical and clinical and partly written and shall be conducted either in English, Marathi, Gujarati, Kannada, Hindi or Urdu. It shall embrace all the subjects referred to in clause (*c*) of rule 20-C. There shall be one paper of three hours.. The oral and practical examinations shall cover all practical problems in relation to Nursing of Children.

3. The marks for the paper shall be 100, and for oral, practical and clinical section 100. In order to pass the examination, candidates must obtain not less than 40 per cent. of the marks in the written portion, and not less than 40 per cent. of marks in the oral, practical and clinical portions, and not less than 50 per cent. of the total marks for the examination. The percentage for Honours is 70 per cent. in the written and the oral, practical and clinical portions separately, and 75 per cent. of the grand total.

4. The fees payable by each candidate for examination or re-examination shall be Rs. 15.

(3) *Examination for Assistant Midwives.*

1. The examination shall be held every three months on the last Mondays in February, May, August and November each year, provided that if the date on which the examination is to be held is a public holiday, the same shall be held on the succeeding working day.

2. The examination shall be partly oral, practical and clinical and partly written and shall be conducted either in English, Marathi, Gujarati, Kannada, Hindi or Urdu. It shall embrace the subjects detailed in Part II-A of Schedule III to the Rules.

Candidates shall be required to submit to the Examiners their Prenatal and Case-taking books at the time of the oral and practical examinations. In marking for the oral and practical examinations, the examiners shall take into consideration the work recorded in these books.

In order to pass the examination, candidates must obtain not less than 30 per cent. of the marks in the written portion and not less than 40 per cent. of the marks in the oral and practical portions and not less than 40 per cent. of the total marks for the examination.

3. The fee payable by each candidate for examination or re-examination shall be Rs. 10.

(4) *Examination for Midwives.*

1. The examination shall be held on the last Mondays in the months of February, May, August and November each year, provided that if the date on which the examination is to be held is a public holiday, the same shall be held on the succeeding working day.

2. The examination shall be partly oral and practical and partly written and shall be conducted either in English, Marathi, Gujarati, Kannada, Hindi or Urdu. It shall embrace the subjects detailed in Part II of Schedule III to the Rules. The candidates shall be required to submit to the Examiners their Prenatal and Case-taking books at the time of the oral and practical examinations. In marking for the oral and practical examinations, the examiners shall take into consideration the work recorded in these books.

In order to pass the examination, candidates must obtain not less than 40 per cent. of the marks in the oral and practical portions and not less than 40 per cent. of the marks in the written portion and not less than 50 per cent. of the total marks for the examination. The percentage for Honours is 75 per cent. of the grand total.

3. The fee payable by each candidate for examination or re-examination shall be Rs. 12.

(4A) *Examination for the Advanced Diploma for Midwives.*

1. The examination shall be held every six months on the first Monday in February and August each year, provided that if the date on which the examination is to be held is a public holiday, the same shall be held on the next working day.

2. The examination shall be partly oral, practical and clinical and partly written and shall be conducted either in English, Marathi, Gujarati Kannada, Hindi or Urdu. It shall embrace the subjects referred to in clause (*c*) of rule 21-B.

3. Candidates shall be required to submit to the examiners their Prenatal and Case-taking books at the time of the oral and practicl examinations. In marking for the oral and practical examinations, examiners shall take into consideration the work recorded in these books.

4. The marks for the written portion of the examination shall be 100 and for the oral, practical and clinical portions 200. In order to pass the examination, candidates must obtain not less than 40 per cent. of the marks in the written portion and not less than 40 per cent. of the marks in the oral, practical and clinical portions and not less than 50 per cent. of the total marks for the examination. The percentage for Honours is 60 per cent. in the written and the oral, practical and clinical portions separately and 75 per cent. of the grand total.

5. The fee payable by each candidate for examination or re-examination shall be Rs. 15.

and

(5) *Examination for Health Visitors.*

1. (*a*) The medium of examination may be English, Marathi, Gujarati, Kannada, Hindi or Urdu.

(*b*) There shall be four Preliminary Examinations in a year for probationers training as Health Visitors, who are not nurses registered in Part " A " or Part " C " of the Register, or who have not passed Part I of the examination in General Nursing, held by the Council in the subjects mentioned in paragraph A of Part III of Schedule III to the Rules. Such examination shall be written, oral and practical.

A candidate who has passed the examination in General Nursing—Part I (Group A)—shall, at her option, be exempted, from appearing in the subjects of Anatomy and Physiology.

A candidate failing twice in this examination shall not be allowed to continue he training.

2. There shall be two Final Examinations a year for probationers training ar Health Visitors and they shall be held on the last Mondays of May and Novembers each year, provided that if the date on which the examination is to be held is a public holiday, the same shall be held on the succeeding working day.

No candidate shall be allowed to sit for such examination until she has completed her full period of training and in the case of a candidate who is only a midwife until she has passed the Preliminary examination.

3. (*a*) Candidates shall be considered to have passed the examinations if they shall have obtained not less than 40 per cent. of the marks in each subject, *viz.*, 40 per cent. in each written and 40 per cent. in each oral and practical test, and not less than one-half of the total number of marks in all the subjects taken together. The percentage of marks for Honours is 70 per cent. in each subject and 75 per cent. of the grand total.

(*b*) (*i*) When re-examined, candidates for the Preliminary examination must appear in all the subjects :

Provided that a candidate who has passed the examination in General Nursing—Part I (Group A)—shall, at her option, be exempted, from appearing in the subject of Anatomy and Physiology.

(*ii*) A candidate who fails in the Final Examination but obtains 60 per cent. of the marks in any subject shall be exempted, at her option from appearing in the subject at a subsequent examination :

Provided, however, that such exemption shall not be granted after a period of two years from the date of the examination in which the exemption was earned :

Provided further, that any candidate who passes the examination in this manner shall not be eligible for honours, prizes or scholarship.

4. The fees payable by each candidate for each examination shall be Rs. 10 for the Preliminary Examination and Rs. 15 for the Final Examination.

(FORM OF APPLICATION FOR ADMISSION TO THE EXAMINATIONS OF THE COUNCIL.)

Examination for

To

THE REGISTRAR,

Bombay Nurses, Midwives and Health Visitors' Council, Bombay.

Sir,

I request permission to present myself at the ensuing examination and herewith forward the sum of Rs. being the necessary fee. I declare that the information supplied below is correct :—

I. Personal Details.

Name in full (in Block letters beginning with surname).
Sex ... ...
Date of birth (according to Christian Era).
Date of admission to school ...
Race or caste and religion ...
Residential address ... ...

II. Examination Particulars.

1. I wish to be examined at the Centre.
2. I wish to answer the Question papers in
*3. I appeared for this examination previously in from
*4. I request exemption from the following subjects as I have obtained 60 per cent. or more of the full marks in each of these subjects at the examination held n the year mentioned against each of them :—

	Subject.	Year.
1.		
2.		
3.		

III. Name of the School which I am attending is—

I am, Sir,
Your most obedient servant,

Place
Date

* Strike off if not required.

EXAMINATION IN GENERAL NURSING—PART I.

Certificate of Training for Candidates appearing from *Hospital.*

We forward herewith applications from the following candidates for admission to the Examination in General Nursing, Part I, to be held on , and certify that the particulars given by the candidates in these application forms are complete and true :—

No.	Names (in full).	Date of engagement.	Leave taken during training (exclusive of monthly annual leave).		Period of training upto the date of written examination.			Ward work.
			Months.	Days.	Years.	Months.	Days.	

The candidates have attended the minimum number of lectures and demonstrations in the subjects for the examination and their character and general conduct are satisfactory. They all have our permission to appear at the ensuing Examination in General Nursing, Part I.

Place

Date Matron. Medical Superintendent.

EXAMINATION IN GENERAL NURSING—PART II.

Certificate of Training for Candidates appearing from *Hospital.*

We forward herewith applications from the following candidates for admission, to the Examination in General Nursing, Part II, to be held on
and certify that the particulars given by the candidates in these application forms are complete and true :—

No.	Names (in full).	Date of engagement.	Leave taken during training (exclusive of monthly annual leave).		Period of training upto the date of written examination.			Date of passing the Junior Examination.	Ward work.
			Months.	Days.	Years.	Months.	Days.		

The candidates have attended the minimum number of lectures and demonstrations in the subjects for the Examination and have put in not less than one year's theoretical and practical training after passing the Examination in Part I. Their character and general conduct are satisfactory. They all have our permission to appear at the ensuing Examination in General Nursing, Part II.

Place

Date Matron. Medical Superintendent.

FIRST EXAMINATION FOR ASSISTANT NURSES.

Certificate of training for Candidates appearing from ..... Hospital.

We forward herewith applications from the following candidates for admission to the First Examination for Assistant Nurses to be held on ....., and certify that the particulars given by the candidates in these application forms are complete and true :—

No.	Names (in full).	Date of engagement.	Leave taken during training (exclusive of monthly annual leave).		Period of training upto the date of written examination.			Ward work.
			Months.	Days.	Years.	Months.	Days.	

The candidates have attended the minimum number of lectures and demonstrations in the subjects for the examination and their character and general conduct are satisfactory. They all have our permission to appear at the ensuing First Examination for Assistant Nurses.

Place.....

Date..... Matron. Medical Superintendent.

SECOND EXAMINATION FOR ASSISTANT NURSES.

Certificate of Training for Candidate appearing from *Hospital.*

We forward herewith applications from the following candidates for admission to the Second Examination for Assistant Nurses to be held on , and certify that the particulars given by the candidates in these application forms are complete and true :—

No.	Names (in full).	Date of engagement.	Leave taken during training (exclusive of monthly annual leave).		Period of training upto the date of written examination.			Date of passing the First Examination.	Ward work.
			Months.	Days.	Years.	Months.	Days.		

The candidates have attended the minimum number of lectures and demonstrations in the subjects for the Examination and have put in not less than one year's theoretical and practical training after passing the First Examination for the Assistant Nurses. Their character and conduct are satisfactory. They all have our permission to appear at the ensuing Second Examination for Assistant Nurses.

Place

Date Matron. Medical Superintendent.

DIPLOMA EXAMINATION IN FEVER NURSING.

Certificate of Training for Candidate appearing from *Hospital.*

We forward herewith applications from the following candidates for admission to the Diploma Examination in Fever Nursing to be held on , and certify that the particulars given by the candidates in these application forms are complete and true :—

No.	Names (in full).	Date of engagement.	Leave taken during training, if any.		Period of training upto the date of written examination.			Number and date of Registration as a nurse.	Practical work.
			Months.	Days.	Years.	Months.	Days.		

The candidates have attended a course in Fever Nursing and have undergone practical instructions in the wards as laid down in rule 20-B. Their character and general conduct have been satisfactory. They all have our permission to appear at the ensuing Diploma Examination in Fever Nursing.

Place

Date Matron. Medical Superintendent.

DIPLOMA EXAMINATION IN CHILDREN'S NURSING.

Certificate of Training for Candidates appearing from *Hospital.*

We forward herewith applications from the following candidates for admission to the Diploma Examination in Children's Nursing to be held on , and certify that the particulars given by the candidates in these application forms are complete and true :—

No.	Names (in full).	Date of engagement.	Leave taken during training, if any,		Period of training upto the date of written examination			Number and date of Registration as a nurse.	Practical work.
			Months	Days.	Years.	Months.	Days.		

The candidates have attended a course in Children's Nursing and have undergone practical instructions in the wards as laid down in rule 20-C. Their character and general conduct have been satisfactory. They all have our permission to appear at the ensuing Diploma Examination in Children's Nursing.

Place

Date Matron. Medical Superintendent.

EXAMINATION FOR ASSISTANT MIDWIVES.

Certificate of Training for Candidates appearing from . . . Hospital.

We forward herewith applications from the following candidates for admission to the Examination for Assistant Midwives to be held on , and certify that the particulars given by the candidates in these application forms are complete and true :—

No.	Names (in full).	Date of engagement.	Leave taken during training, if any.		Period of training up to the date of written examination.			Ward work.
			Months.	Days.	Years.	Months.	Days.	

The candidates have attended a course of lectures and demonstrations which have included the subjects prescribed in the syllabus and have undergone practical instruction in the wards as laid down in Rule 21-A. Their character and general conduct have been satisfactory. They all have our permission to appear at the ensuing Examination for Assistant Midwives.

Place

Date Matron. Medical Superintendent.

EXAMINATION FOR MIDWIVES.

Certificate of Training for Candidates appearing from *Hospital.*

We forward herewith applications from the following candidates for admission to the Examination for Midwives to be held on , and certify that the particulars given by the candidates in these application forms are complete and true :—

No.	Names (in full).	Date of engagement.	Leave taken during training if any.		Period of training up to the date of written examination.			In case of trained nurses No. and date of registration, or date of passing the Nursing Examination, Part II.	Ward work.
			Months.	Days.	Years.	Months.	Days.		

The candidates have attended a course in Midwifery as laid down in the syllabus and have undergone practical instruction in the wards as laid down in Rule 21. Their character and general conduct have been satisfactory.

The candidates who are not trained nurses have also attended a course of lectures in Anatomy, Physiology and Elementary Nursing during the first six months of their training which have included the subjects prescribed in the syllabus and have passed the Test carried out by the institution in these subjects. They all have our permission to appear at the ensuing Examination for Midwives.

Place

Date Matron. Medical Superintendent.

ADVANCED DIPLOMA EXAMINATION FOR MIDWIVES.

Certificate of Training for Candidates appearing from Hospital.

We forward herewith applications of the following candidates for admission to the Advanced Diploma Examination for Midwives to be held on and certify that the particulars given by the candidates in these application forms are complete and true :—

No.	Names (in full).	Date of engagement	Leave taken during training if any.		Period of training upto the date of written examination.			No. and date of Registration, as Midwife.	Practical work.
			Months.	Days.	Years.	Months.	Days.		

The candidates have attended a course in Advanced Midwifery and other subjects and have undergone practical instruction in the wards, centre and in the patients' homes as laid down in rule 21-B. Their character and general conduct have been satisfactory. They all have our permission to appear at the ensuing Advanced Diploma Examination for Midwives.

Place

Date

Matron.

Medical Superintendent.

EXAMINATION FOR HEALTH VISITORS.

Certificate of Training for Candidates appearing from .

We forward herewith applications from the following candidates for admission to the $\frac{\text{Preliminary}}{\text{Final}}$ Health Visitors' Examination to be held on , and certify that the particulars given by the candidates in these application forms are complete and true :—

No.	Names (in full).	Date of engagement	Leave taken during training if any.		Period of training upto the date of written examination.			No. and date of Registration, or date of passing the Midwifery examination.	Ward work.
			Months.	Days.	Years.	Months.	Days.		

The candidates have attended a course of lectures and demonstrations which have included the subjects prescribed in the syllabus and have had practical training as laid down in Rule 22. Their character and general conduct have been satisfactory. They all have our permission to appear at the ensuing $\frac{\text{Preliminary}}{\text{Fina}}$ Examination for Health Visitors.

Place

Date Matron. Medical Superintendent.

THE BOMBAY PUBLIC TRUSTS REGISTRATION ACT, 1935 (BOM. XXV OF 1935).

G. N., R. D., No. 8708/28, dated 28th August 1937 (B. G., Pt. I, p. 2058). S. 2 (2).

In exercise of the powers conferred by sub-section (2) of section 2 of the Bombay Public Trusts Registration Act, 1935 (Bom. XXV of 1935), the Government of Bombay is pleased to direct that all the provisions of the said Act shall apply to public trusts created or existing for the benefit of the Jain Community and, having an annual gross income of not less than Rs. 1,000.

G. N., R. D., No. 8708/28, dated 3rd May 1938 (B. G., Pt. IV-A, p. 628). S. 2 (2)

Amended by G. N., R. D., No. 8708/28, dated 6th August 1940.

In exercise of the powers conferred by sub-section (2) of section 2 of the Bombay Public Trusts Registration Act, 1935 (Bom. XXV of 1935), the Government of Bombay is pleased to direct that all the provisions of the said Act shall apply to public trusts created or existing solely for the benefit of the Bene-Israel community and having an annual gross income of not less than Rs. 1,000.

G. N., R. D., No. 4513/45, dated 4th August 1947 (B. G., Pt. IV-B, p. 515). S. 2 (2)

In exercise of the powers conferred by sub-section (2) of section 2 of the Bombay Public Trusts Registration Act, 1935 (Bom. XXV of 1935), the Government of Bombay is pleased to direct that all the provisions of the said Act shall apply to all public trusts having an annual gross income of not less than Rs. 1,000, other than those to which the Mussalman Wakf Act, 1923, and the Parsi Public Trusts Registration Act, 1936, apply.

G. N., R. D., No. 4792/33 (b), dated 8th December 1937 (B. G., Pt. IV-A, p. 1681). S. 4

Amended by G. N., R. D., No. 4792/33, dated 7th June 1938.

Amended by G. N., R. D., No. 4792/33, dated 8th October 1938.

Amended by G. N,, R. D., No. 4792/33 dated 2nd July 1947.

In exercise of the powers conferred by section 4 of the Bombay Public Trusts Registration Act, 1935 (Bom. XXV of 1935), the Government of Bombay is pleased to appoint—

(1) all the Judges, including the Chief Judge, of the Court of Small Causes, Bombay, for Greater Bombay,

(1A) the Additional First Class Sub-Judge of the Broach and Panch Mahals district at Nadiad, for the Panch Mahals Division of the said district, and

(2) elsewhere, the Subordinate Judges of the First Class other than Joint or Additional Subordinate Judges, for the locall imits of their respective jurisdictions,

to be Registrars of Public Trusts for the purposes of the said Act.

S. 27. Bombay Public Trusts Registration Rules, 1937.

G. N., R. D., No. 4792/33, dated 8th December 1937 (B. G., Pt. IV-A, pp. 1669-1675).

Amended by G. N., R. D., No. 4792/33, dated 2nd April 1940.

Amended by G. N., R. D., No. 4792/33, dated 19th July 1940.

Amended by G. N., R. D., No. 4792/33, dated 26th March 1942.

In exercise of the powers conferred by section 27 of the Bombay Public Trusts Registration Act, 1935 (Bom. XXV of 1935), the Government of Bombay is pleased to make the following rules for the purpose of carrying into effect the provisions of the said Act, namely :—

1. *Short title.*—These rules may be called the Bombay Public Trusts Registration Rules, 1937.

2. *Definitions.*—(1) The "Act" means the Bombay Public Trusts Registration Act, 1935.

(2) "Section" means a section of the Act.

3. *Form of Statement under section 5.*—The statement referred to in section 5 shall be in the form of Schedule A appended hereto and shall contain the particulars specified therein.

4. *Fees under section 5.*—The fee to accompany the statement referred to in section 5 shall be in cash and of the following amount :—

	Rs.
(1) when the value of the property of a public trust does not exceed Rs. 2,000	1
(2) when the value of the property of a public trust exceeds Rs. 2,000 but does not exceed Rs. 5,000	2
(3) when the value of the property of a public trust exceeds Rs. 5,000 but does not exceed Rs. 10,000	5
(4) when the value of the property of a public trust exceeds Rs. 10,000	10

5. *Verification of statement under section 5.*—Every person signing the statement referred to in section 5 shall subscribe on solemn affirmation before the Registrar, a Justice of Peace, a Magistrate, a Gazetted Officer or before any officer of court empowered to administer oaths under section 139 of the Code of Civil Procedure, 1908, that the facts mentioned in the said statement are true to the best of his information and belief.

6. *Manner in which enquiries shall be held under sections 6 and 8.*—The enquiries under sections 6 and 8 shall, subject to the provisions of sub-section (5) of section 6, be held as far as possible in accordance with the procedure prescribed for the trial of suits in the City of Bombay under the Presidency Small Cause Courts Act, 1882, and elsewhere under the Provincial Small Cause Courts Act, 1887. In any such enquiry a party may appear in person or by his recognised agent or b a pleader duly appointed to act on his behalf :

Provided that any such appearance shall, if the Rgeistrar so directs, be made by the party in person.

7. *Award of costs.*—The costs of enquiries under sections 6 and 8 shall be in the discretion of the Registrar. The Registrar may, in such cases as he deems proper, after recording reasons, order that such costs shall be paid from the funds and property of the trust or out of the Public Trusts Administration Fund of the district.

8. *Maintenance of the Register of Public Trusts.*—The Register of Public Trusts referred to in section 7 shall be maintained in the form of Schedule B hereto.

9. *Changes in the Register of Public Trusts to be reported.*—(1) Any change in any of the particulars recorded in the Register of Public Trusts shall, under sub-section (*1*) of section 8, be reported to the Registrar by the manager of the trust concerned in the form of Schedule C hereto.

(2) The Registrar shall, after due enquiry, amend the entry or entries in the Register affected by such changes. The original entry shall be scored out in red ink and the addition or alteration initialled by the Registrar.

(3) The fee to accompany every report under sub-rule (1) shall be annas eight.

10. *Accounts.*—The accounts under sub-section (*1*) of section 12 should be written in books which shall be regularly kept in such manner and shall contain such particulars as will, in the opinion of the Registrar, facilitate the preparation of statements in Forms D and E and the verification of the entries to be made therein.

10-A. *Qualifications of auditors.*—The audit of accounts of a public trust shall be carried out—

(*a*) in the case of public trusts, the gross income of which during the year in question exceeds three thousand rupees, by a person possessing the qualifications specified in sub-section (*2*) of section 12 or a person who holds a restricted certificate to act as an auditor within the State of Bombay and who continues to act under sub-section (*2*) of section 3 of the Indian Companies (Amendment) Act, 1930 (XIX of 1930); and

(*b*) in the case of any other public trust by a person possessing such qualifiactions as the Registrar may deem sufficient.

11. *Powers for audit.*—For the purposes of audit under sections 12 and 17, the Registrar may either of his own motion or at the request of the auditor—

(1) require the production before the auditor of any book, deed, account, voucher or other document or record necessary for the proper conduct of his audit;

(2) require the manager or any person having the custody or control of, or accountable for, any such book, deed, account, voucher or other document or record to appear in person before the auditor;

(3) require the manager or any such person to give the auditor such information as may be necessary for the aforesaid purpose;

(4) require the manager or any person having the custody or control of, or accountable for, any moveable property belonging to the trusts to produce such property for the inspection of the auditor or to give the auditor such information as may be necessary regarding the same.

12. *Particulars to be included in the auditor's report under section 12.*—The report of an auditor relating to accounts audited under section 12 shall contain the following particulars :—

(*a*) whether receipts and disbursements are properly and correctly shown in the accounts ;

(*b*) whether the accounts are maintained regularly and in accordance with the provisions of the Act and the rules ;

(*c*) whether the property and the funds of the trust have been applied for the objects and purposes of the trust ;

(*d*) whether all books, deeds, accounts, vouchers or other documents or records required by the auditor were produced before him ;

(*e*) whether the manager or trustee or any other person required by the auditor to appear before him did so and furnished the necessary information required by him ;

(*f*) whether any property or funds of the trust were alienated or expended for any object or purpose other than the object or purpose of the trust ;

(*g*) whether the cash balance and vouchers in the custody of the manager or trustee on the date of the audit were in agreement with the accounts ;

(*h*) any special matter which the auditor may think fit or necessary to bring to the notice of the Registrar ;

(*i*) such other particulars as the Registrar may direct.

13. *Particulars in the report of special audit.*—The report of the auditor regarding any special audit ordered to be made under section 17 shall contain such particulars as the Registrar may direct.

14. *Statement of accounts.*—The statement of accounts to be prepared and furnished to the Registrar by the manager under sub-section (*4*) of section 12 shall be in the form of and shall contain the particulars specified in Schedules D and E hereto.

15. *Fees and manner of inspection.*—A fee at the rate of one rupee per day shall be charged for the inspection of each entry or portion thereof in the Register of Public Trusts or each statement, notice, intimation, account or audit note or other document filed under the Act ; provided that the Registrar may, in his discretion, by an order in writing allow, in fit cases, inspection of any number of such entries and documents on payment of such smaller fee as he may deem proper ; provided further that the minimum fee which the Registrar shall charge shall be a fee payable at the rate of one rupee for every day on which the inspection is made. Such inspection shall be allowed during office hours only, subject to such supervision as the Registrar may in each case direct.

16. *Fees for supply of copies.*—The fees for the supply of copies under section 13 shall be—

(*a*) in the case of English copies, nine pies for every 25 words or fraction thereof;

(*b*) in the case of vernacular copies, nine pies for every 33 words or fraction thereof;

(*c*) in the case of certified copies, an additional nine pies for every 100 words or fraction thereof for comparing;

(*d*) in the case of a document in a tabular form, twice the above rates;

(*e*) an additional fee of six pies for every sheet of foolscap paper used in preparing the copy or copies asked for.

17. *Custody of papers.*—The statements, audit reports and copies of deeds or instruments furnished to the Registrar under the Act, and other papers relative to the same shall be kept in the custody of the Registrar and a register of the same shall be kept in the form of Schedule F hereto, to which an alphabetical index shall be attached.

18. *Contribution to the District Public Trusts Administration Fund.*—Unless lower rates shall have been fixed under rule 22 contributions at the following rates shall be paid annually out of the property or funds of each public trust to the Public Trusts Administration Fund of the district or area concerned on or before the 30th June:—

In the case of a public trust having gross annual income not exceeding Rs. 2,000.	at 3 per cent. on such income.
In the case of a public trust having gross annual income exceeding Rs. 2,000 but not exceeding Rs. 10,000.	at 3 per cent. on the first Rs. 2,000 and at 2 per cent. on the remaining part of such income.
In the case of a public trust having gross annual income exceeding Rs. 10,000 but not exceeding Rs. 1,00,000.	at 3 per cent. on the first Rs. 2,000, at 2 per cent. on the next Rs. 8,000 and at 1 per cent. on the remaining part of such income.
In the case of a public trust having gross annual income exceeding Rs. 1,00,000.	at 3 per cent. on the first Rs. 2,000, at 2 per cent. on the next Rs. 8,000, at 1 per cent. on the next Rs. 90,000 and at ½ per cent. on the remaining part of such income.

Provided that no such contribution shall in the case of any public trust exceed Rs. 2,000.

Explanation.—For the purposes of this rule, the term "gross annual income" shall not include donations given or offerings made with a specific direction that they should form part of the corpus of the public trust property.

19. *Management of the Public Trusts Administration Fund.*—The management, custody, investment and disbursement of the Public Trusts Administration Fund shall vest in the Registrar. The said Fund shall, at the discretion of the Registrar, be invested in Government securities or deposited in the Imperial Bank of India or such other Bank as may be appointed to conduct the business of Government treasury or, with the sanction of the State Government, in any other bank in the State of Bombay.

20. *Publication of list of public trusts.*—A list of public trusts and a statement of the sums standing to the credit of the Public Trusts Administration Fund at the end of each financial year shall be published in the form of Schedule G hereto before the end of April next following.

21. *Prosecution for offences under this Act.*—The Registrar may, after making necessary inquiry and giving an opportunity to the person against whom a prosecution is contemplated to be heard, either grant or refuse sanction for such prosecution. The order of sanction shall state the offence in respect of which the accused is to be prosecuted.

22. The Registrar may, with the previous sanction of Government, make such reduction from time to time in the contributions to be made to the Public Trusts Administration Fund of the district or area, prescribed in these rules as not ordinarily to leave any surplus in such fund at the end of any year in excess of the amount as will in the opinion of Government be sufficient for payment of the charges and expenses referred to in section 16.

SCHEDULE A.

SCHEDULE

(*Vide*

Statement of particulars required by section 5 of the

Serial No.	Names of Public Trusts.	Names of the Trustees and the Manager with their addresses.	Mode of succession to trusteeship and managership.	Trust	
				*Details of moveable property.	Estimated value of each property in column 5.
1	2	3	4	5	6

Income of last 3 years			Gross average annual income estimated on the income of three years in columns 12-14.	Sources of income of the public trust.	Expenditure during last 3 years		
Gross income in year.	Gross income in year.	Gross income in year.			Gross expenditure in year.	Gross expenditure in year.	Gross expenditure in year.
12	13	14	15	16	17	18	19

*In the case of moveable property the entries should be made by broad descriptions of classes of should be made only if such cash forms part of the capital of the trust.

The statement as regards property should be as on the last day of the financial year immediately

A.

Rule 3.)

Bombay Public Trusts Registration Act, 1935.

property

Details of immoveable property				
Village where situate.	C. S. or Municipal No. or Survey No. with the description of the tenure on which it is held.	Area of the property in column 8.	Assessment or Judi.	Estimated value of each property in column 8.
7	8	9	10	11

Amount of average annual expenditure based on expenditure in columns 17, 18 and 19.	Amount of average expenditure on the object of the trust.	Details of documentary evidence creating the public trust.	Particulars other than the documents in column 21 about the origin, nature and object of the public trust.	Details of alienations.	Remarks.
20	21	22	23	24	25

property, *e.g.*, furniture, books, etc., rather than of each individual article. Entry regarding cash

preceding the date of filing the statement.

Signature of manager.

SCHEDULE

(*Vide*

The Register of

Serial No.	Name of Public Trust.	Names of the Trustees and the Managers of Public Trusts with their addresses.	Mode of succession to trusteeship and managership.	Details	
				*Details of moveable property.	Its estimated value.
1	2	3	4	5	6

Estimated gross annual income from property mentioned in columns 5 and 9.	Estimated income from other sources.	Amount payable to Government as revenue and to local bodies as rates or cesses.	Estimated annual expenditure in realizing the income mentioned in column 13.	Estimated
				(*a*) maintenance of the managers or trustees as the case may be.
13	14	15	16	17

* Entries regarding cash should be made

B.

Rule 8.)

Public Trusts.

of property of Public Trusts					
Details of immoveable property					Estimated value of each property mentioned in column 9.
Village where situate.	Tenure.	Survey No. or C. S. or Municipal No.	Area.	Assessment or judi.	
7	8	9	10	11	12

annual expenditure as remuneration or otherwise.			Estimated total annual expenditure of columns 15 to 20.	Remarks.
(*b*) towards performance of purely religious ceremonies.	(*c*) charitable purposes.	(*d*) any other purposes.		
18	19	20	21	22

only if such cash forms part of the capital of the trust.

SCHEDULE C.

[*Vide* Rule 9 (1).]

Statement of changes in the particulars recorded in the Register of Public Trusts.

Serial No.	Name of Public Trust.	Serial number of the entries affected in the Register of Public Trusts.	Nature of the change.	Reasons for the change.	Any further remarks deemed necessary to explain the change.	Registrar's orders.
1	2	3	4	5	6	7

Note.—This statement is to be filed with the statement under section 5.

SCHEDULE D.

SCHEDULE

(*Vide*

Statement of income

Serial No.

Income from immoveable property.					Income from other property	
Particulars of property.	Arrears of income at the end of the previous year.	Demand of rent fixed for the current year.	Amount realised during the year.	Arrears outstanding with details of the year to which they belong.	Description of property.	Arrears of income at the end of the previous year.
1	2	3	4	5	6	7

D.

Rule 10.)

for the year ending

Name of Public Trust

including securities (if any).			Total realisations and outstandings.		
Amount to be recovered during the current year.	Amount realised during the year.	Arrears outstanding.	Total amount recovered during the year.	Total arrears outstanding.	Remarks.
8	9	10	11	12	13

SCHEDULE

(*Vide*

Statement of expenditure

Serial No.

Assessment, cesses and other Government dues.	Municipal and other taxes.	Charges incurred for maintenance and necessary improvement of property including repairs.	Pay and allowances of servants.	Ceremonies.
1	2	3	4	5

SCHEDULE

(*Vide*

General

Serial No.	Name of trust property.	Where situated.	Name of manager or trustee.
1	2	3	4

E.

Rule 10.)

for the year ending

Name of Public Trust

Remuneration to Manager and/or trustees.	Other expenses.	Total expenditure.	Total income.	Balance.
6	7	8	9	10

F.

Rule 17.)

Register

Years of which accounts are submitted.	Date of auditor's report.	Abstract of deeds or instruments of which copies are furnished.	Remarks as to copies given, notices for further information issued, etc.
5	6	6A	7

SCHEDULE G.

(*Vide* Rule 20.)

(1) *List of Public Trusts* *for the year ending 31st March 19* .

Serial No.	Name of Public Trusts.	Taluka and village in which the Public Trust is situated.	Details of the property of the Public Trust.	The names of Trustees and/or Managers.	Amount contributed to the Public Trusts Administration Fund.
1	2	3	4	5	6

(2) *Statement of the sums standing to the credit of the Public Trusts Administration Fund for the year ending 31st March 19 .*

Name of the District or Area.	Opening balance.	Contributions and receipts during the year.	Expenditure.	Closing balance.
1	2	3	4	5

Office of the Registrar. Registrar of Public Trusts.

THE BOMBAY MOTOR VEHICLES TAX ACT, 1935 (BOM. XXXIV OF 1935).

G. N., R. D., No. 2544/39-III, dated 2nd May 1940 (B. G., Pt. I, p. 1490). S. 3 (1)

In exercise of the powers conferred by sub-section (*1*) of section 3 of the Bombay Motor Vehicles Tax Act, 1935 (Bom. XXXIV of 1935), and in supersession of Government Notification, in the Home Department, No. 6832/3, dated the 26th day of February 1936, the Government of Bombay is pleased to direct that with effect from the 2nd day of May 1940, a tax at the rates specified in column 2 of the schedule hereto annexed shall be levied in respect of the motor vehicles shown in column 1 thereof used or kept for use in the State.

Schedule.

Motor Vehicles.	Rate of tax.
1	2
	Rs.
A. Motor vehicles fitted solely with pneumatic tyres—	
I.—Motor cycles and tricycles (including motor-scooters and cycles with attachment for propelling the same by mechanical power) not exceeding 8 cwt. in weight, unladen :—	
(*a*) Cycles not exceeding 200 lbs. in weight, unladen ..	18
(*b*) Cycles exceeding 200 lbs. in weight, unladen	24
(*c*) Tricycles	24
(*d*) Cycles or tricycles used for drawing a trailer or sidecar, in addition to above rates	3
II.—Motor vehicles not exceeding 5 cwt. in weight, unladen, adapted and used for invalids	5
III.—Motor vehicles (including tricycles) weighing more than 8 cwt. unladen used for the transport or haulage of goods or materials :—	
(*a*) Vehicles the registered laden weight of which does not exceed 30 cwt.	150
(*b*) Vehicles the registered laden weight of which exceeds 30 cwt. but does not exceed 60 cwt.	240
(*c*) Vehicles the registered laden weight of which exceeds 60 cwt. but does not exceed 90 cwt.	360
(*d*) Vehicles the registered laden weight of which exceeds 90 cwt. but does not exceed 120 cwt.	440
(*e*) Vehicles the registered laden weight of which exceeds 120 cwt. but does not exceed 150 cwt.	520
(*f*) Vehicles the registered laden weight of which exceeds 150 cwt.	520
(*g*) Additional tax payable in respect of such vehicles used for drawing trailers :—	
(1) for each trailer the registered laden weight of which does not exceed 40 cwt.	150
and	
(2) for each trailer the registered laden weight of which exceeds 40 cwt.	240

Provided that two or more vehicles shall not be chargeable under this clause in respect of the same trailer :

Provided further that the rates for motor vehicles registered for use solely within municipal and cantonment limits shall be two-thirds of the aforesaid rates.

Motor Vehicles.	Rate of tax.
1	2
	Rs.
IV.—Motor vehicles plying for hire and used for the transport of passengers :—	
(*a*) Vehicles licensed to carry in all not more than four persons (excluding the driver of the vehicle)	120
(*b*) Vehicles licensed to carry more than two persons (excluding the driver of the vehicle) for every additional person in excess of four persons which the vehicle is so licensed to carry ..	16

Provided that the rates for motor vehicles registered for use solely within municipal and cantonment limits shall be two-thirds of the aforesaid rates :

Provided further that the maximum annual tax in the case of motor vehicles registered for use solely within municipal and cantonment limits shall not exceed Rs. 333-6-0 and in other cases shall not exceed Rs. 500.

V.—Motor vehicles other than those liable to tax under the foregoing provisions of the schedule :—	
(*a*) Vehicles not exceeding 15 cwt. in weight, unladen ..	40
(*b*) Vehicles exceeding 15 cwt. but not exceeding 30 cwt. in weight, unladen	60
(*c*) Vehicles exceeding 30 cwt. but not exceeding 45 cwt. in weight, unladen	80
(*d*) Vehicles exceeding 45 cwt. in weight, unladen	110
(*e*) Additional tax payable in respect of such vehicles used for drawing trailers :—	
(1) for each trailer not exceeding 1 ton in weight, unladen ..	25
(2) for each trailer exceeding 1 ton in weight, unladen ..	50

Provided that two or more vehicles shall not be chargeable under this clause in respect of the same trailer.

B. Motor vehicles other than those fitted solely with pneumatic tyres.	The rates shown in Class A *plus* 50 per centum.
C. Motor vehicles visiting the State ..	The rates prescribed in the rules.
D. Dealers in or manufacturers of motor vehicles— For a general licence—	
(1) in respect of any seven or less number of motor vehicles.	300
(2) in respect of any additional seven or less number of motor vehicles	300

S. 18 **G. N., H. D., No. 6122/4, dated 26th June 1944 (B. G., Pt. IV-B, p. 171).**

In exercise of the powers conferred by section 18 of the Bombay Motor Vehicles Tax Act, 1935 (Bom. XXXIV of 1935), the Government of Bombay is pleased to exempt a motor vehicle other than a transport vehicle from the payment of the tax payable under the said Act for the quarter in respect of which a corresponding tax on the vehicle has been paid in another State being a Part A State or Part C State.

G. N., R. D., No. 2544/39-III, dated 7th June 1940 (B. G., Pt. IV-A, p. 721).

S. 20. Bombay Motor Vehicles Tax Rules, 1940.

Amended by G. N., H. D., No. 2344/39-III, dated 21st September 1940.
Amended by G. N., H. D., No. 6882/3-XXIV(b), dated 2nd December 1941.
Amended by G. N., H. D., No. 5448/21, dated 18th July 1942.
Amended by G. N., R. D., No. 6832/3-XXIV(4), dated 24th April 1943.
Amended by G. N., H. D., No. 228/4, dated 31st December 1943.
Amended by G. N., H. D., No. 6832/3-XVII, dated 10th January 1944.
Amended by G. N., H. D., No. 6122/4, dated 2nd September 1947.
Amended by G. N., H. D., No. 1528/5, dated 25th May 1948.
Amended by G. N., H. D., No. 8845/5, dated 18th January 1950.

In exercise of the powers conferred by section 20 of the Bombay Motor Vehicles Tax Act, 1935 (Bom. XXXIV of 1935) and in supersession of the Bombay Motor Vehicles Tax Rules, 1936, published in Government Notification, Home Department, No. 6832/3, dated 19th March 1936, the Government of Bombay is pleased to make the following rules for carrying out the purposes of the said Act, namely :—

Bombay Motor Vehicles Tax Rules, 1940.

1. *Title and commencement.*—(1) These rules may be called the Bombay Motor Vehicles Tax Rules, 1940.

(2) They shall come into force on the 10th June 1940.

2. *Definitions.*—In these rules unless there is anything repugnant in the subject or context—

(*a*) "Act" means the Bombay Motor Vehicles Tax Act, 1935;

(*b*) "Form" means a form appended to these rules;

(*c*) "State" means the State of Bombay;

(*d*) "Registered" means registered or deemed to be registered under the Motor Vehicles Act, 1939;

(*e*) "Registering Authority" means an authority empowered to register vehicles under the Motor Vehicles Act, 1939;

(*f*) "Section" means a section of the Act;

(*g*) Words and expressions used but not defined in these rules shall have the meanings assigned to them in the Motor Vehicles Act, 1939, or in the Bombay Motor Vehicles Tax Act, 1935, or in the Bombay Motor Vehicles Rules, 1940.

3. *Assessment of rate of tax.*—When a motor vehicle is registered within the State the registering authority shall, after verifying the particulars furnished in the application for registration, determine the rate at which the vehicle is liable for the levy of the tax and make an endorsement in Form T on the said application and on the certificate of taxation to be issued on payment of the tax.

4. *Declaration.*—(1) The declaration under sub-section (*1*) of section 6 shall be in Form "AT". It shall state—

(*a*) the registered number, if any, of the vehicle;

(*b*) the period for which tax is to be paid in advance in respect of the vehicle; and

(*c*) if the vehicle is one which would be liable to levy of the tax according to the rates specified in Article III or Article IV of Clause A in Schedule I of the Act, whether the vehicle is intended to be used—

(i) solely within Municipal and Cantonment limits, or

(ii) both within and without such limits.

(2) A fresh declaration shall be made every time the payment of the tax is to be made.

5. *Declaration—how to be delivered.*—The declaration under sub-section (*1*) of section 6 shall be delivered either in person or through an agent or sent by registered post to the registering authority within whose jurisdiction the vehicle is to be used or kept for use, together with the amount of tax due for the period specified in the declaration and the certificate of taxation, if any, issued in respect of the vehicle.

6. *Period within which declaration is to be made.*—The declaration under sub-section (*1*) of section 6 shall be delivered—

(i) in case of a motor vehicle which has been registered and in respect of which the tax has been paid before the date of the coming into force of these rules, within fifteen days from the date of the expiry of the period for which the tax has last been paid or, if the use of the vehicle was discontinued, within fifteen days after the vehicle is again brought into use, whichever is later, and

(ii) in case of any other vehicle, along with the application for registration.

7. *Additional declaration.*—The additional declaration under sub-section (*2*) of section 6 shall be in Form "BT" and shall state the alterations made to the vehicle. Such declaration shall be delivered, within fifteen days of the making of such alterations, to the registering authority within whose jurisdiction the vehicle is used or kept for use together with—

(*a*) the certificate of taxation of the vehicle ;

(*b*) the current tax token, if any, issued in respect of the vehicle ; and

(*c*) the amount of additional tax that appears to be due in consequence of the alterations made to the vehicle.

8. *Forms of declaration and additional declaration from whom to be obtained.*—The necessary forms of declaration and additional declaration to be made under section 6 may be obtained from the registering authority or from any police station.

9. *Registering authority to satisfy itself that declaration or additional declaration is complete.*—The registering authority shall satisfy itself that every declaration or additional declaration delivered or sent to it is complete in all respects and that the proper amount of tax or additional tax, as the case may be, has been paid, and for this purpose, it may require the registered owner or the person having possession or control of the vehicle in respect of which the declaration or additional declaration is made, to produce the vehicle before itself or before an Inspector of Motor Vehicles. If the registering authority is satisfied that the correct amount of tax has been paid, it shall issue a token in Form "CT".

10. *Payment—how to be made.*—The payment of the tax may be made to the registering authority in cash or by cheque or money order or into a Government treasury :

Provided that—

(*a*) if the amount is sent by post, it shall not be sent except by cheque or by money order ;

(*b*) no cheque other than one drawn on a bank which has a clearing account with the Reserve Bank of India shall be accepted by the registering authority in the City of Bombay ;

(*c*) no cheque other than one drawn on a bank which has a clearing account with the branch of the Imperial Bank of India at the place in which the office of the registering authority is situate shall be accepted by a registering authority in any place outside the City of Bombay ;

(*d*) no cheque not drawn in the name of the registering authority shall be accepted ;

(*e*) no money order shall be accepted by the registering authority unless it is addressed to such registering authority and gives the necessary particulars such as the number of the motor vehicle, the period for which the tax is proposed to be paid and the amount of the tax remitted ; and

(*f*) when payment is made into a Government treasury the duplicate of the chalan shall be sent to the registering authority.

11. *Vehicles exempted from tax under section 18.*—(1) Any person claiming exemption from the payment of the tax under any notification issued under section 18 in respect of any vehicle shall communicate the registered number of such vehicle to the registering authority within whose jurisdiction such vehicle is used or kept for use together with such other particulars as that authority may require and apply for a token showing that the vehicle is exempted from the payment of the tax.

(2) If the registering authority is satisfied that the vehicle is exempted from payment of tax it shall issue a token in Form " CT " with the word " Exempted " written on it in the space opposite the entry " class ". Such token shall be valid for the period specified in it.

(3) The application under sub-rule (1) shall be made within fifteen days of the entry of such vehicle into the State or within fifteen days of the expiry of the period of the token, if any, last issued in respect of such vehicle.

12. *Application for refund under section 5.*—(1) Any person claiming a refund under section 5 or on the ground that he has paid more tax than is due from him shall submit an application in Form " DT " to the registering authority within whose jurisdiction the vehicle is used or kept for use stating the grounds on which the refund is claimed.

(2) Every such application shall be accompanied by the certificate of taxation and the current tax token issued in respect of such vehicle.

13. *Certificate of refund.*—If on receipt of an application under rule 12 the registering authority, after making such enquiry, if any, as it deems fit, is satisfied that a refund is admissible it shall calculate the amount of refund due, issue to the applicant a certificate in Form " ET " and return to the applicant the certificate of taxation after making entries thereon of any refund admitted together with a fresh tax token if the tax on the vehicle is levied at a rate different from that at which it was originally levied. If the rate of tax is not altered, the original token shall be returned to the applicant.

14. *Payment of refund.*—Any person to whom a certificate in Form " ET " has been issued shall on presentation of the certificate at the local Government Treasury within fifteen days from the date of its issue or from the date of signification of any subsequent renewal of the certificate by the registering authority be entitled to the payment of the sum mentioned therein.

15. *Register of refunds.*—The registering authority shall maintain a register of refunds of the tax and every amount for which a certificate in Form " ET " has been issued shall be entered in such register. If the registering authority issuing the certificate of refund is not the authority in whose custody the records of the vehicle are maintained, it shall communicate the particulars of the refund to such other authority.

16. *Power to stop vehicle.*—Any police officer in uniform of and above the rank of a constable may exercise the powers mentioned in section 8.

17. *Composition of offences.*—When any person is accused of an offence under section 10, the registering authority in whose jurisdiction the alleged offence has been committed or any Inspector of Motor Vehicles authorised by such registering authority in writing in this behalf shall inform such person by notice in writing that it shall be lawful for him under sub-section (*2*) of section 10, to pay as penalty by way of composition for the offence with which he is accused, within seven days from the date of such notice either :—

(A) a sum determined in accordance with the following provisions, viz. :—

(*a*) if the offence falls under clause (*a*) of sub-section (*1*) of section 10, the penalty shall be, for each month or part of the month for which the tax was due and has not been paid, a sum equivalent to the following amount :—

(i) if the offence is reported voluntarily by or on behalf of the accused 1/16th, and

(ii) if the offence is not reported voluntarily by or on behalf of the accused 1/8th,

of the amount of the tax payable by the accused for a period of 12 months ;

(*b*) if the offence falls under clause (*b*) of sub-section (*1*) of section 10, the penalty shall be 1/10th of the amount of the tax for a period of 12 months or additional tax payable by the accused ;

(*c*) the sum payable as penalty shall be double the amount prescribed in clause (*a*) or (*b*) if the accused has been previously convicted under sub-section (*1*) of section 10, or has previously paid under sub-section (*2*) of section 10 penalty by way of composition for a similar offence or

(B) such smaller sum as the registering authority may in any case determine.

18. *Record of penalties to be maintained.*—Every registering authority shall maintain a record of all sums payable as penalties and of all recoveries made under rule 17.

19. *Declaration to be submitted in respect of motor vehicles, brought temporarily into the State.*—Any person—

(*a*) who brings a motor vehicle temporarily into the State and keeps it for use therein, or

(*b*) who, although he keeps a vehicle outside the State, ordinarily uses such vehicle in the State,

shall within seven days of the entry of the vehicle into the State or of the commencement of such use, as the case may be, deliver or cause to be delivered to the nearest registering authority a declaration in Form "FT".

20. *Thirty days' exemption from tax allowed in certain cases to vehicles other than transport vehicles.*—Any person bringing into the State a motor vehicle other than a transport vehicle and using it or keeping it for use therein for a period not exceeding thirty consecutive days in any one financial year shall be exempt from the payment of the tax :

Provided that if he so uses or keeps for use or intends to so use or keep for use the vehicle for a period exceeding thirty consecutive days he shall be liable forthwith to pay the tax for the whole of the period for which the vehicle is or is intended to be used or kept for use in the State ;

Provided further that this exemption shall not be granted more than once in any financial year.

20-A. *Exemption from tax not to be allowed in certain cases to vehicles other than transport vehicles.*—Notwithstanding anything contained in rule 20, if at any time, the State Government is satisfied that Motor Vehicles other than transport vehicles registered and taxed in the State of Bombay are not allowed exemption from payment of similar tax by any other State, or French or Portuguese Settlement, the State Government may, by notification in the Official Gazette, declare that Motor Vehicles other than transport vehicles registered and taxed in such State or Settlement shall not be eligible for the exemption under the said rule 20.

21. *Tax to be paid if a vehicle brought into the State is temporarily used for a period exceeding thirty days.*—If a motor vehicle other than a transport vehicle is brought into the State and is to be kept for temporary use therein for a period exceeding thirty consecutive days or if such a vehicle kept outside the State is to be used therein over a period exceeding thirty consecutive days, the owner or person in charge of such vehicle shall pay to the nearest registering authority, within seven days of the commencement of such use, the amount of tax due for the number of months the vehicle is to be used as computed in the table in the First Schedule to these rules.

21A. [*Deleted.*]

22. *Transport vehicles not entitled to exemption from tax.*—If a transport vehicle is brought for temporary use into the State, the tax shall be leviable for the whole of the period for which it is used or kept for use in the State. The amount of the tax due shall be as computed in the table in the First Schedule to these rules and shall be paid to the nearest registering authority by the owner or the person in charge of such vehicle within seven days of the entry of the vehicle into the State or on demand by the registering authority or any officer authorised by it in this behalf, whichever is earlier.

Note.—For the purpose of rules 21 and 22—

(i) part of a calendar month shall be considered as one month, and

(ii) the period for which tax is to be paid need not necessarily expire at the end of a quarter.

23. *Issue of token in case of vehicles brought for temporary use in the State.*—When the registering authority on receipt of a declaration in Form " FT " is satisfied that the vehicle in respect of which such declaration is made is exempt from the payment of the tax under rule 20 or that the amount of tax due in respect of such vehicle under rule 20 or 21 as the case may be, has been paid, it shall furnish the person making the declaration with a token in Form " GT ". If the vehicle is exempt from the payment of the tax, the word " Free " should be written on the token in the space opposite the entry " Tax paid ".

24. *Registering authority to decide whether a vehicle is or is not used temporarily.*—The registering authority shall whenever necessary determine whether the use of any vehicle brought into, the State is or is not temporary.

25. *Token.*—(1) A token issued under these rules in respect of any vehicle shall be attached to and carried on the vehicle at all times when the vehicle is in use in any public place. The token shall be enclosed in a holder in accordance with the specification set out in the Third Schedule to these rules.

(2) The token shall be carried—

(i) in the case of motor cycles, motor cycles with side cars, motor tricycles and motor scooters, in a conspicuous position on the left side of the vehicle, and

(ii) in the case of motor vehicles on the left side of the vehicle and not less than 2 feet 6 inches nor more than 6 feet 6 inches from the ground level between two parallel lines, the first drawn vertically through the rear most part of the driving seat and the second drawn 6 inches in front of the base of the front glass wind-screen where fitted, or where no such wind-screen is fitted, through a point 4 feet forward of the first line :

Provided that in the case of a vehicle fitted with a front glass wind-screen extending across the vehicle the token shall be carried facing forwards on the left lower corner of the glass of the wind-screen so as to be visible through the glass.

(3) The token shall be placed and carried on the vehicle so as to be clearly visible at all times by day-light to a person standing near the left side of the vehicle whether such vehicle is moving or stationary.

26. *Arrears of tax may be claimed.*—When the period for which the tax due in respect of any vehicle has been paid has expired, any further declaration is submitted on any date later than fifteen days from the date of the expiry of such period, the owner or person in charge of such vehicle shall be liable to pay the arrears of tax from such date unless such owner or person—

(*a*) has immediately before the date of the expiry of such period intimated to the registering authority that the vehicle shall not be used after the expiry of such period, or

(*b*) proves to the satisfaction of the registering authority, whose decision shall be final, that the motor vehicle was not used during the whole of the period for which the tax was not paid :

Provided that in case the owner intimates the registering authority that the vehicle shall not be used after the expiry of the period for which the tax has been paid, he shall notify the place where the vehicle will be kept and shall not remove it from such place without the prior permission of the registering authority.

27. *Alteration, etc., of tax token.*—(1) No person shall alter, deface, mutilate or add anything to a token issued under these rules or exhibit it on a vehicle other than the vehicle for which such token has been issued.

(2) If a token is lost, destroyed, defaced or altered or has become illegible, the person to whom such token has been issued shall immediately report the fact to the registering authority and obtain a duplicate from it on payment of a fee of Re. 1.

If the original token reported to be lost is subsequently found, it shall be surrendered without delay to the registering authority.

28. *Fraction of an anna to be counted as an anna.*—For the purpose of calculating the amount of the tax or penalty payable by, or the amount of refund due to, any person under the Act, a fraction of an anna shall be counted as one anna.

29. *Register of receipts of tax.*—The registering authority shall maintain a register of receipts of the tax.

30. *Notice of place and time of business.*—The registering authority may give public notice of the places at which, the date on which and the hours between which payment of the tax may be made and applications made and heard under the Act.

31. *Appeals under section 19-A.*—(1) Any person aggrieved by any order of a registering authority made under the Act may, within a period of thirty days from the date on which such order was made, appeal to the Provincial Transport Officer.

(2) An appeal under sub-rule (1) shall be preferred in duplicate in the form of a memorandum setting forth concisely the grounds of objection to the order appealed against and shall be accompanied by a certified copy of that order.

32. *Procedure on appeals.*—When an appeal is presented under rule 31, the Provincial Transport Officer shall give an intimation thereof to the registering authority, and may, after giving an opportunity to the parties concerned to be heard and after making such inquiry as he deems fit, either confirm, modify or set aside the order of the registering authority.

33. *Supply of copies.*—The Provincial Transport Officer or the registering authority concerned against whose order an appeal has been preferred under rule 31 may give to any person interested in the appeal copies of the memorandum of appeal and of any documents produced therewith on payment of a fee of two rupees per copy of each document.

FIRST

(Rule

Class.	Type.	1 month.	2 months.	3 months.	4 months.	5 months.
		Rs. a.	Rs. a.	Rs. a.	Rs. a.	Rs. a.
I	(a) Motor cycle not exceeding 200 lbs. weight unladen.	2 0	3 8	5 0	7 0	8 8
	(b) Motor cycle exceeding 200 lbs. weight unladen.	2 8	4 8	6 8	9 0	11 0
	(c) Motor tricycle ..	2 8	4 8	6 8	9 0	11 0
	(d) Additional for side car or trailer.	0 8	1 0	1 0	1 8	1 8
II	Motor vehicle for invalids unladen weight not exceeding 5 cwt.	0 8	1 0	1 8	2 0	2 8
III	Goods vehicles—					
	(a) the registered laden weight of which does not exceed 30 cwt.	15 0	27 8	40 0	55 0	67 8
	(b) the registered laden weight of which exceeds 30 cwt. but does not exceed 60 cwt.	24 0	44 0	64 0	87 8	107 8
	(c) the registered laden weight of which exceeds 60 cwt. but does not exceed 90 cwt.	36 0	66 0	96 0	131 8	161 8
	(d) the registered laden weight of which exceeds 90 cwt. but does not exceed 120 cwt.	44 0	80 8	117 0	160 8	197 8
	(e) the registered laden weight of which exceeds 120 cwt. but does not exceed 150 cwt.	51 8	95 0	138 8	190 0	233 0
	(f) the registered laden weight exceeds 150 cwt.	51 8	95 0	138 8	190 0	233 0
	(g) (i) additional for each trailer the registered laden weight of which does not exceed 40 cwt.	15 0	27 8	40 0	55 0	67 8
	(ii) additional for each trailer the registered laden weight of which exceeds 40 cwt.	24 0	44 0	64 0	87 8	107 8
IV	Motor vehicles plying for passenger hire—					
	4 passengers ..	12 0	22 0	32 0	44 0	54 0
	5 do. ..	13 8	25 0	36 8	50 0	61 0
	6 do. ..	15 8	28 0	40 8	55 8	68 8
	7 do. ..	17 0	31 0	45 0	61 8	75 8
	8 do. ..	18 8	34 0	49 0	67 8	82 8
	9 do. ..	20 0	36 8	53 8	73 0	90 0
	10 do. ..	21 8	39 8	57 8	79 0	97 0
	11 do. ..	23 0	42 8	62 0	85 0	104 0
	12 do. ..	25 0	45 8	66 0	90 8	111 8

SCHEDULE.

21.)

6 months.	7 months.	8 months.	9 months.	10 months.	11 months.	12 months.
Rs. a.	Rs. a.	Rs. a.	Rs. a.	Rs. a.	Rs. a.	Rs. a.
10 0	11 8	13 0	14 8	16 8	18 0	18 0
13 0	15 8	17 8	19 8	21 8	23 8	24 0
13 0	15 8	17 8	19 8	21 8	23 8	24 0
2 0	2 0	2 8	2 8	3 0	3 0	3 0
3 0	3 8	4 0	4 8	5 0	5 0	5 0
80 0	95 0	107 8	120 0	134 8	147 0	150 0
127 8	151 8	171 8	191 8	215 0	235 0	240 0
191 8	227 0	257 0	287 0	322 8	352 8	360 0
234 0	277 8	314 0	351 0	394 8	431 0	440 0
276 8	328 0	371 8	441 8	466 0	509 8	520 0
276 8	328 0	371 8	414 8	466 0	509 8	520 0
80 0	95 0	107 8	120 0	134 8	147 0	150 0
127 8	151 8	171 8	191 8	215 0	235 0	240 0
64 0	75 8	85 8	96 0	107 8	117 8	120 0
72 8	86 0	97 8	108 8	122 0	133 8	136 0
81 0	96 0	108 8	121 8	136 8	149 0	152 0
89 8	106 0	120 0	134 0	150 8	164 8	168 0
98 0	116 0	131 8	147 0	165 0	180 8	184 0
106 8	126 8	143 0	159 8	179 8	196 0	200 0
115 0	136 8	154 8	172 8	193 8	211 8	216 0
123 8	146 8	166 0	185 0	208 0	227 8	232 0
132 0	156 8	177 0	198 0	222 8	243 0	248 0

Class.	Type.	1 month.	2 months	3 months.	4 months.	5 months.
		Rs. a.	Rs. a.	Rs. a.	Rs. a.	Rs. a.
IV—*contd.*	Motor vehicles plying for passenger hire—					
	13 passengers ..	26 8	48 8	70 8	96 8	118 8
	14 do. ..	28 0	51 8	74 8	102 8	125 8
	15 do. ..	29 8	54 0	79 0	108 0	133 0
	16 do. ..	31 0	57 0	83 0	114 0	140 0
	17 do. ..	32 8	60 0	37 8	120 0	147 0
	18 do. ..	34 8	63 0	91 8	125 8	154 8
	19 do. ..	36 0	66 0	96 0	131 8	161 8
	20 do. ..	37 8	69 0	100 0	137 8	168 8
	21 do. ..	39 0	71 8	104 8	143 0	176 0
	22 do. ..	40 8	74 8	108 8	149 0	183 0
	23 do. ..	42 0	77 8	113 0	155 0	190 0
	24 do. ..	44 0	80 8	117 0	160 8	197 8
	25 do. ..	45 8	83 8	121 8	166 8	204 8
	26 do. ..	47 0	86 8	125 8	172 8	211 8
	27 do. ..	48 8	89 0	130 0	178 0	219 0
	28 do. and over ..	49 8	91 8	133 0	182 8	224 0
V	Other motor vehicles—					
	(*a*) not exceeding 15 cwt.. in weight, unladen.	4 0	7 8	11 0	15 0	18 0
	(*b*) exceeding 15 cwt. but not exceeding 30 cwt. in weight, unladen.	6 0	11 0	16 0	22 0	27 0
	(*c*) exceeding 30 cwt. but not exceeding 45 cwt. in weight, unladen.	8 0	15 0	21 8	29 8	36 0
	(*d*) exceeding 45 cwt. in weight, unladen.	11 0	20 8	29 8	40 8	49 8
	(*e*) (*i*) additional for each trailer not exceeding 1 ton in weight, unladen.	2 8	5 0	7 0	9 8	11 8
	(*ii*) additional for each trailer exceeding 1 ton in weight, unladen.	5 0	9 8	13 8	18 8	22 8

Note.—1. In the case of motor vehicles fitted with solid tyres, 50 per cent. should be added
2. In the case of motor vehicles included in classes III and IV above which are to be
3. Tax can only be paid for a period ending on 30th June, 30th September, 31st or first quarter thereof payment may be made at any time in March, but this which is registered in May can pay tax for 2, 5, 8 or 11 months and a motor a period beyond the 31st March next following.

6 months.	7 months.	8 months.	9 months.	10 months.	11 months.	12 months.
Rs. a.	Rs. a.	Rs. a.	Rs. a.	Rs. a.	Rs. a.	Rs. a.
140 8	166 8	188 8	210 8	236 8	258 8	264 0
149 0	176 8	200 0	223 8	251 0	274 8	280 0
157 8	187 0	211 8	236 0	265 8	290 0	296 0
166 0	197 0	223 0	249 0	279 8	305 8	312 0
174 8	207 0	234 8	261 8	294 0	321 8	328 0
183 0	217 0	245 8	274 8	308 8	337 0	344 0
191 8	227 0	257 0	287 0	322 8	352 8	360 0
200 0	237 0	268 8	300 0	337 0	368 8	376 0
208 8	247 8	280 0	312 8	351 8	384 0	392 0
217 0	257 8	291 8	325 8	365 8	399 8	408 0
225 8	267 8	303 0	338 0	380 0	415 8	424 0
234 0	277 8	314 0	351 0	394 8	431 0	440 0
242 8	287 8	325 8	363 8	408 8	446 8	456 0
251 0	297 8	337 0	376 8	423 0	462 8	472 0
259 8	308 0	348 8	389 0	437 8	478 0	488 0
266 0	315 8	357 0	398 8	448 0	490 0	500 0
21 8	25 8	28 8	32 0	36 0	39 8	40 0
32 0	38 0	43 0	48 0	54 0	59 0	60 0
42 8	50 8	57 8	64 0	72 0	78 8	80 0
58 8	69 8	78 8	88 0	99 0	108 0	110 0
13 8	16 0	18 0	20 0	22 8	24 8	25 0
27 0	31 8	36 0	40 0	45 0	49 0	50 0

to the above figures.
used solely within Municipal and Cantonment limits, two-thirds of the tax only should be sent.
December and 31st March of the current financial year provided that for the ensuing financial year will not cover, nor permit use of motor vehicle before April 1st. For example, a motor vehicle vehicle registered in December can pay for 1 or 4 months. No tax can be paid in any year for

SECOND SCHEDULE—[*Deleted.*]

THIRD SCHEDULE.

(Rule 25.)

SPECIFICATION OF HOLDER FOR TAX TOKEN.

(1) The holder shall be made of metal in such manner as to make it weather proof. It shall be circular and shall conform to the following specifications :—

Card Tray.—The tax token shall fit neatly into a sheet metal tray of suitable thickness, having a turned up edge of sufficient depth to hold the token and a stout cover glass.

Ring Cover.—There shall be a circular ring of sheet metal shaped to fit down closely on the tray and adapted for fixing by screws, bolts or otherwise, to the vehicle in the prescribed position. A rubber ring shall be provided so as to fit in between the metal ring, the cover glass and the tray in such manner that the whole token carrier shall be weather proof.

Dimensions.—The aperture within the ring cover shall clearly exhibit the whole of the token and shall have a diameter of 2 11/16 inches.

(2) In cases in which the token is enclosed in a holder which is weather proof and is carried on the front glass windscreen of the vehicle, the holder need not be of metal with a clear glass front.

FORM "T".

(Rule 3.)

Motor Vehicle No. is liable to tax under Article Clause of Schedule I to the Act.

Annual Rate of Tax..... Rs.

Quarterly Rate of Tax..... Rs.

Date.

Registering Authority.

FORM "AT".

Form of Declaration to be made in respect of a Motor Vehicle used or kept for use in the State.

(Section 6 (*1*) and Rule 4.)

I desire to pay in respect of motor vehicle No. the tax due up to

*30th June / 30th September / 31st December / 31st March of the current financial year and tender Rs. by

*cash / cheque / money order / treasury chalan being the tax due for that period.

(*a*) I intend to use the vehicle solely in Municipal and Cantonment limits.

*

(*b*) I intend to use the vehicle both within and without Municipal and Cantonment limits.

Date.

Signature.

* Strike out whichever is inapplicable.

Note 1.—This form should be attached to the form of application for registration (Form E of Motor Vehicles Act, 1939) when the tax is to be paid for the first time and should be submitted separately at the time of each subsequent payment of the tax.

Note 2.—Under section 10 of the Bombay Motor Vehicles Tax Act, 1935, the delivery of a declaration by any person wherein the particulars required by or under the Act are not fully and truly stated render such person liable to a fine which may, on first conviction, extend to a sum equal to the total amount of the annual tax payable in respect of the vehicle and in the event of such person having been previously convicted of an offence under the said section to twice the sum aforesaid. Failure to deliver a declaration duly filled in on or before the proper date renders the person concerned liable on a first conviction to a fine up to Rs. 100, and for each subsequent conviction, to a fine up to Rs. 200.

Certified that the abovementioned vehicle is liable to tax under Article Clause of Schedule I and that Rs. is due for the period from to

Date.

Signature.

Registering Authority.

The tax of Rs. mentioned above has been duly received by me, *vide* receipt No. dated

Signature.

Cashier.

Tax token No. to expire on has been issued to-day.

Signature.

Registering Authority.

FORM "BT".

DECLARATION OF ALTERATIONS TO A MOTOR VEHICLE.

(Sections 6 (*2*) and 7 and Rule 7.)

I residing at hereby declare that I have on made the following alterations in my motor vehicle bearing registered No. thereby making it liable to a higher rate of tax under the Bombay Motor Vehicles Tax Act, 1935. The tax token granted in respect of the motor vehicle No. is hereby surrendered.

I tender Rs. in payment of the additional tax due up to

I also forward herewith the certificate of taxation in respect of the motor vehicle.

Description of Alterations.

Date. Signature.

FORM "CT".

(*See* Rule 9.)

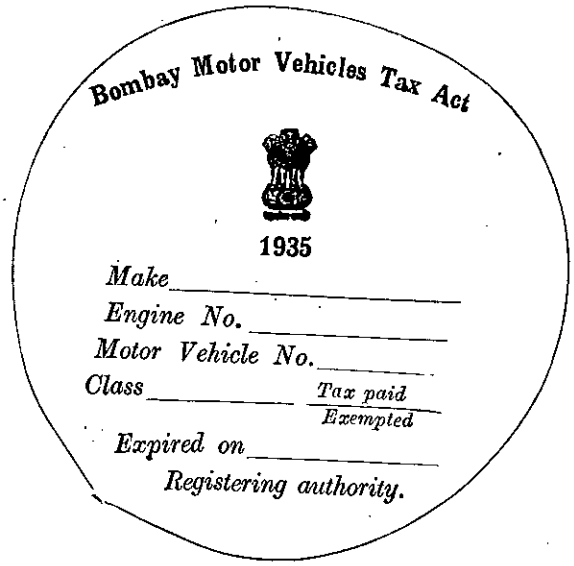

FORM "DT".

APPLICATION FOR REFUND OF TAX.

(Section 5 and Rule 12.)

I residing at owner of motor vehicle registered No. , having paid the tax on the said vehicle for the period to hereby claim a refund of the tax on the following grounds :—

(1) That the tax token in respect of motor vehicle bearing registered No. was surrendered on together with the certificate of taxation for endorsement.

(2) That the registration of motor vehicle No. was refused on .

(3) That motor vehicle No. is subject to a lower rate of tax.

(4) That I have paid more tax than is due from me.

Satisfactory proof of my claim is attached herewith.

Date. Applicant.

Note.—Strike out any clause which is not applicable.

FORM "ET".

(Section 5 and Rule 13.)

(Payable within 15 days from the date of issue or any subsequent renewal.)

FORM OF ORDER FOR REFUNDS.

To

The Treasury Officer,

The Secretary and Treasurer, Imperial Bank of India.

The Manager, the Reserve Bank of India, Bombay.

I registering authority hereby certify that

*Mr. having paid on

the amount of Rs. as tax on the motor vehicle† bearing

registered number for is entitled to

a refund of Rs. on account of reasons mentioned at item

No. of the following items :—

(1) That the tax token of his motor vehicle No. has been surrendered.

(2) That he has been refused registration of his motor vehicle [under the provisions of section 5 (*3*) of the Bombay Motor Vehicles Tax Act, 1935.]

(3) That his motor vehicle No. is liable to tax at a lower rate.

(4) That he has paid more tax than is due from him.

A note of refund has been made on the original document.

Please pay to Mr. rupees
(words and figures) on account of the above refund.

Date

Signature of Registering Authority.

[Under Rupees

* Full particulars and permanent address of the person who has paid tax should be inserted.

† A brief description of the motor vehicle should be inserted, if it has not been registered.

FORM "FT".

FORM OF DECLARATION FOR MOTOR VEHICLES BROUGHT TEMPORARILY INTO THE STATE.

(*See* Rule 19.)

I hereby declare that I have brought the undermentioned motor vehicle into the State of Bombay on and that I intend to keep it in the State up to for use

(*a*) solely in Municipal and Cantonment limits
* (*b*) both within and without Municipal and Cantonment limits.

(1) Description of the motor vehicle—

(2) Registered number—

(3) Maker's name—

(4) Type of vehicle—

(5) Number of chassis—

(6) Number on engine—

(7) Unladen weight—

(8) Seating capacity if plying for hire—

(9) Registered laden weight (if a goods vehicle)—

(10) (*a*) Date on which the motor vehicle was last brought into

and

(*b*) Date on which it was last removed from the State of Bombay—

(11) Signature of the declarant—

(12) Permanent postal address—

(13) Temporary postal address in the State of Bombay—

Date

Signature of the declarant.

Tax token No. expiring on has been issued by me after recovering Rs. being the tax due.

Date

Registering Authority.

* Strike out whichever is inapplicable.

FORM "GT".

(*See* rule 23.)

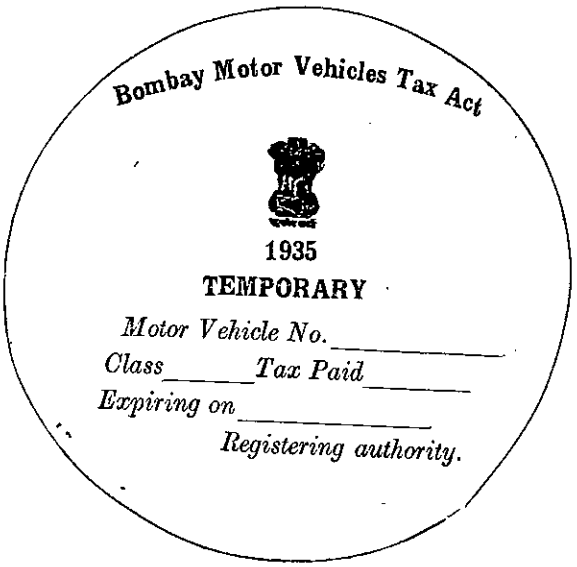

THE BOMBAY OPIUM SMOKING ACT, 1936 (BOM. XX OF 1936).

G. N., R. D., No. 4414/24, dated 31st May 1938 (B. G., Pt. IV-A, p. 941). SS. 12, 13, 14, 15, 17, 18, & 27.

The Government of Bombay is pleased to empower the officer mentioned in column 2 of the schedule hereto with the powers under the various sections of the Bombay Opium Smoking Act, 1936 (Bom. XX of 1936), specified against them in column 3 of the said schedule to be exercised by them within their respective jurisdictions :—

1 Serial No.	2 Designation of officer.	3 Sections under which powers may be exercised.
1	The Superintendents of Excise in charge of Divisions in the State of Bombay.	12, 13, 14, 17 (1), 18 (1) and 27 (2).
2	The Divisional Forest Officers, North Khandesh and West Nasik.	12, 13, 14, 17 (1), 18 (1) and 27 (2).
3	Inspectors, Assistant Inspectors and Sub-Inspectors of the Excise Department in the State of Bombay.	12, 13, 14, 15 (2), 17 (1) and 18 (1).
4	Jamadars, Havildars, Naiks and Constables of the Excise Department.	14 and 17 (1).
5	Supervisor and Inspectors of the Tobacco Department ...	12, 13, 14, 15 (2), 17 (1) and 18 (1).
6	Jamadars, Havildars, Naiks and Constables of the Tobacco Department.	14 and 17 (1).
6A	The Commissioner of Police for Greater Bombay ...	27 (2).
6B	The Deputy Commissioner of Police, Prohibition, for Greater Bombay.	27 (2).
6C	Jamadars, Havildars, Naiks and Constables of the Police Department.	14 and 17 (1).
7	All Police Officers of and above the rank of Sub-Inspector of the Police Department.	13, 14 and 17 (1).
8	The Collector of Customs, Bombay	13, 14, 17 (1) and 27 (2).
9	All Assistant Collectors of Customs, Preventive Department, Bombay.	13, 14, 17 (1) and 27 (2).
10	All Preventive Officers and Inspectors of the Customs Department in the Town and Island of Bombay.	13, 14 and 17 (1).
11	Assistant and Deputy Collectors of the Revenue Department	13, 14 and 17 (1).
12	Mamlatdars and Mahalkaris	13, 14 and 17 (1).

THE PARSI PUBLIC TRUSTS REGISTRATION ACT, 1936 (BOM. XXIII OF 1936).

G. N., R. D., No. 6336/33 (a), dated 8th December 1937 (B. G., Pt. IV-A, p. 1680). S. 4

Amended by G. N., R. D., No. 6336/33, dated 7th June 1938.

Amended by G. N., R. D., No. 6336/33, dated 8th October 1938.

Amended by G. N., R. D., No. 6336/33, dated 2nd July 1947.

In exercise of the powers conferred by section 4 of the Parsi Public Trusts Registration Act, 1936 (Bom. XXIII of 1936), the Government of Bombay is pleased to appoint—

(1) All the Judges including the Chief Judge, of the Court of Small Causes, Bombay, for Greater Bombay;

(1A) the Additional First Class Sub-Judge of the Broach and Panch Mahals Division of the said district; and

(2) elsewhere, the Subordinate Judges of the First Class, other than Joint or Additional Subordinate Judges, for the local limits of their respective jurisdiction,

to be Registrars of Parsi Public Trusts for the purposes of the said Act.

G. N., R. D., No. 6336/33, dated 8th December 1937 (B. G., Pt. IV-A, p. 1658). S. 25 Parsi Public Trusts Registration Rules, 1937.

Amended by G. N., R. D., No. 6336/33, dated 19th July 1940.

Amended by G. N., R. D., No. 6336/33, dated 26th March 1942.

Amended by G. N., R. D., No. 6336/33, dated 15th November 1946.

Amended by G. N., R. D., No. 6336/33, dated 3rd April 1947.

In exercise of the powers conferred by section 25 of the Parsi Public Trusts Registration Act, 1936 (Bom. XXIII of 1936), the Government of Bombay is pleased to make the following rules for the purpose of carrying into effect the provisions of the said Act, namely :—

1. *Short title.*—These rules may be called the Parsi Public Trusts Registration Rules, 1937.

2. *Definitions.*—(1) The "Act" means the Parsi Public Trusts Registration Act, 1936.

(2) "Section" means a section of the Act.

3. *Form of Statement under section 5.*—The statement referred to in section 5 shall be in the form of Schedule A appended hereto and shall contain the particulars specified therein.

4. *Fees under section 5.*—The fee to accompany the statement referred to in section 5 shall be in cash and of the following amount :—

	Rs.
(1) when the value of the property of a public trust does not txceed Rs. 2,000	1
(2) when the value of the property of a public trust exceeds Rs. 2,000 but does not exceed Rs. 5,000	2
(3) when the value of the property of a public trust exceeds Rs. 5,000 but does not exceed Rs. 10,000	5
(4) when the value of the property of a public trust exceeds Rs. 10,000	10

5. *Verification of statement under section 5.*—Every person signing the statement referred to in section 5 shall subscribe on solemn affirmation before the Registrar, a Justice of Peace, a Magistrate, a Gazetted Officer or before any officer of court empowered to administer oaths under section 139 of the Code of Civil Procedure, 1908, that the facts mentioned in the said statement are true to the best of his information and belief.

6. *Manner in which enquiries shall be held under sections 6 and 8.*—The inquiries under sections 6 and 8 shall, subject to the provisions of sub-section (*6*) of section 6, be held as far as possible in accordance with the procedure pescribed for the trial of suits in the city of Bombay under the Presidency Small Causes Courts Act, 1882, and elsewhere under the Provincial Small Causes Courts Act, 1887. In any such enquiry a party may appear in person or by his recognised agent or by a pleader duly appointed to act on his behalf:

Provided that any such appearance shall, if the Registrar so directs be made by the party in person.

7. *Award of costs.*—The costs of enquiries under sections 6 and 8 shall be in the discretion of the Registrar. The Registrar may, in such cases as he deems proper after recording reasons, order that such costs shall be paid from the funds and property of the trust or out of the Parsi Public Trusts Administration Fund of the district.

8. *Maintenance of the Register of Parsi Public Trusts.*—The Register of Parsi Public Trusts referred to in section 7 shall be maintained in the form of Schedule B hereto.

9. *Changes in the Register of Parsi Public T usts to be reported.*—(1) Any change in any of the particulars recorded in the Register of Parsi Public Trusts shall, under sub-section (*1*) of section 8, be reported to the Registrar by the manager of the trust concerned in the form of Schedule C hereto.

(2) The Registrar shall, after due enquiry, amend the entry or entries in the Register affected by such changes. The original entry shall be scored out in red ink and the addition or alteration initialled by the Registrar.

(3) The fee to accompany every report under sub-rule (1) shall be annas eight.

10. *Accounts.*—The accounts under sub-section (*1*) of section 12 should be written in books which shall be regularly kept in such manner and shall contain such particu]ars as will, in the opinion of the Registrar, facilitate the preparation of sta tements in Forms D and E and the verification of the entries to be made therein.

10-Ar *Qualifications of auditors.*—The audit of accounts of a public trust shall be caried out—

(*a*) in the case of public trusts, the gross income of which during the year in question exceeds three thousand rupees, by a person possessing the qualifications specified in sub-section (*2*) of section 12, or by a person who holds a restricted cert ficate to act as an auditor within the State of Bombay and who continues to aict under sub-section (*2*) of section 3 of the Indian Companies (Amendment) Act, 1930 (XIX of 1930), and

((in the case of any other public trust by a person possessing such qualifications as *b*the Registrar may deem sufficient.

11. *Powers for audit.*—For the purposes of audit under sections 12 and 18, the Registrar may either of his own motion or at the request of the auditor—

(1) require the production before the auditor of any book, deed, account, voucher or other document or record necessary for the proper conduct of the audit ;

(2) require the manager or any person having the custody or control of, or accountable for, any such book, deed, account, voucher or other document or record to appear in person before the auditor ;

(3) require the manager or any such person to give the auditor such information as may be necessary for the aforesaid purpose ;

(4) require the manager or any person having the custody or control of, or accountable for, any moveable property belonging to the trusts to produce such property for the inspection of the auditor or to give the auditor such information as may be necessary regarding the same.

12. *Particulars to be included in the auditor's report under section 12.*—The report of an auditor relating to accounts audited under section 12 shall contain the following particulars :—

(*a*) whether receipts and disbursements are properly and correctly shown in the accounts ;

(*b*) whether the accounts are maintained regularly and in accordance with the provisions of the Act and the rules ;

(*c*) whether the property and the funds of the trust have been applied for the objects and purposes of the trust ;

(*d*) whether all books, deeds, accounts, vouchers or other documents or records required by the auditor were produced before him ;

(*e*) whether the manager or trustee or any other person required by the auditor to appear before him did so and furnished the necessary information required by him ;

(*f*) whether any property or funds of the trust were alienated or expended for any object or purpose other than the object or purpose of the trust ;

(*g*) whether the cash balance and vouchers in the custody of the manager or trustee on the date of the audit were in agreement with the accounts ;

(*h*) any special matter which the auditor may think fit or necessary to bring to the notice of the Registrar ;

(*i*) such other particulars as the Registrar may direct.

13. *Particulars in the report of special audit.*—The report of the auditor regarding any special audit ordered to be made under section 18 shall contain such particulars as the Registrar may direct.

14. *Statement of accounts.*—The statement of accounts to be prepared and furnished to the Registrar by the manager under sub-section (*4*) of section 12 shall be in the form of and shall contain the particulars specified in Schedules D and E hereto.

15. *Fees and manner of inspection.*—A fee at the rate of one rupee per day shall be charged for the inspection of each entry or portion thereof in the Register of Parsi Public Trusts or each statement, notice, intimation, account or audit note or other document filed under the Act : provided that the Registrar may, in his discretion, by an order in writing allow, in fit cases, inspection of any number of such entries and documents on payment of such smaller fee as he may deem proper ; provided further that the minimum fee which the Registrar shall charge shall be a fee payable at the rate of one rupee for every day on which the inspection is made. Such inspection shall be allowed during office hours only, subject to such supervision as the Registrar may in each case direct.

16. *Fees for supply of copies.*—The fees for the supply of copies under section 14 shall be—

(*a*) in the case of English copies, nine pies for every 25 words or fraction thereof ;

(*b*) in the case of vernacular copies, nine pies for every 33 words or fraction thereof ;

(*c*) in the case of certified copies, an additional nine pies for every 100 words or fraction thereof for comparing ;

(*d*) in the case of a document in a tabular form, twice the above rates ;

(*e*) an additional fee of six pies for every sheet of foolscap paper used in preparing the copy or copies asked for.

17. *Custody of papers.*—The statements, audit reports and copies of deeds or instruments furnished to the Registrar under the Act, and other papers relative to the same shall be kept in the custody of the Registrar and a register of the same shall be kept in the form of Schedule F hereto, to which an alphabetical index shall be attached.

18. *Contribution to the Parsi Public Trusts Administration Fund of the District or area.*—Unless lower rates shall have been fixed under rule 19 contributions at the following rates shall be paid annually out of the property or funds of each public trust to the Parsi Public Trusts Administration Fund of the district or area concerned on or before the 30th June :—

In the case of a public trust having gross annual income not exceeding Rs. 2,000.	at 3 per cent. on such income.
In the case of a public trust having gross annual income exceeding Rs. 2,000 but not exceeding Rs. 10,000.	at 3 per cent. on the first Rs. 2,000 and at 2 per cent. on the remaining part of such income.
In the case of a public trust having gross annual income exceeding Rs. 10,000 but not exceeding Rs. 1,00,000.	at 3 per cent. on the first Rs. 2,000, at 2 per cent. on the next Rs. 8,000 and at 1 per cent. on the remaining part of such income.
In the case of a public trust having gross annual income exceeding Rs. 1,00,000.	at 3 per cent. on the first Rs. 2,000, at 2 per cent. on the next Rs. 8,000, at 1 per cent. on the next Rs. 90,000 and at ½ per cent. on the remaining part of such income.

Provided that no such contribution shall in the case of any public trust exceed Rs. 2,000.

Explanation.—For the purposes of this rule the term "gross annual income" shall not include donations given or offerings made with a specific direction that they should form part of the corpus of the public trust property.

19. The Registrar may, with the previous sanction of Government, make such reductions from time to time in the contributions to be made to the Parsi Public Trusts Administration Fund of the district or area, prescribed in these rules as not ordinarily to leave any surplus in such fund at the end of any year in excess of the amount as will in the opinion of Government be sufficient for payment of the charges and expenses referred to in section 17.

20. *Management of the Parsi Public Trusts Administration Fund.*—The management, custody, investment and disbursement of the Public Trusts Administration Fund shall vest in the Registrar. The said Fund shall, at the discretion of the Registrar, be invested in Government securities or deposited in the Imperial Bank of India or such other Bank as may be appointed to conduct the business of a Government treasury or, with the sanction of the State Government, in any other Bank in the State of Bombay.

21. *Publication of list of Parsi public trusts.*—A list of Parsi public trusts and a statement of the sums standing to the credit of the Parsi Public Trusts Administration Fund at the end of each financial year shall be published in the form of Schedule G hereto before the end of April next following.

SCHEDULE A.

(*Vide* Rule 3.)

Statement of particulars required by section 5 of the Parsi Public Trusts Registration Act, 1936.

Serial No.	Names of Public Trusts.	Names of the Trustees and the Manager with their addresses.	Mode of succession to trusteeship and managership.	Trust property.			
				*Details of moveable property.	Estimated value of each property in column 5.	Details of immoveable property.	
						Village where situate.	C. S. or Municipal No. or Survey No. with the description of the tenure on which it is held.
1	2	3	4	5	6	7	8

Trust property—*contd.*			Income of last 3 years.			Gross average annual income estimated on the income of three years in columns 12–14.	Sources of income of the public trust.
Area of the property in column 8.	Assessment or judi.	Estimated value of each property in column 8.	Gross income in year.	Gross income in year.	Gross income in year.		
9	10	11	12	13	14	15	16

Expenditure during last 3 years.			Amount of average annual expenditure based on expenditure in columns 17, 18 and 19.	Amount of average expenditure on the object of the trust.	Details of documentary evidence creating the public trust.	Particulars other than the documents in column 21 about the origin; nature and object of the public trust.	Details of alienations.	Remarks.
Gross expenditure in year.	Gross expenditure in year.	Gross expenditure in year.						
17	18	19	20	21	22	23	24	25

* In the case of moveable property the entries should be made by broad description of classes of property, i.e., furniture, books, etc., rather than of each individual article. Entry regarding cash should be made only if such cash forms part of the capital of the trust.

The statement as regards property should be as on the last day of the financial year immediately preceding the date of filing the statement.

Signature of manager.

SCHEDULE B.

(*Vide* Rule 8.)

The Register of Parsi Public Trusts.

Serial No.	Name of Public Trust.	Names of the Trustees and the Managers of Public Trust with their addresses.	Mode of succession to trusteeship and managership.	Details of property of Parsi Public Trusts.	
				*Details of moveable property.	Its estimated value.
1	2	3	4	5	6

Details of property of Parsi Public Trusts—*contd.*							
Details of immoveable property.					Estimated value of each property mentioned in column 9.	Estimated gross annual income from property mentioned in columns 5 and 9.	Estimated income from other sources.
Village where situate.	Tenure.	Survey No. or C. S. or Municipal No.	Area.	Assessment or judi.			
7	8	9	10	11	12	13	14

Amount payable to Government as revenue and to local bodies as rates or cesses.	Estimated annual expenditure in realizing the income mentioned in column 13.	Estimated annual expenditure as remuneration or otherwise				Estimated total an expenditure of columns 15 to 20.	Remarks.
		(*a*) maintenance of the managers or trustees as the case may be.	(*b*) towards performance of purely religious ceremonies.	(*c*) charitable purposes.	(*d*) any other purposes.		
15	16	17	18	19	20	21	22

* Entry regarding cash should be made only if such cash forms part of the capital of the trust.

SCHEDULE C.

[*Vide* Rule 9 (1).]

Statement of Changes in the particulars recorded in the Register of Parsi Public Trusts.

Serial No.	Name of Parsi Public Trust.	Serial number of the entries effected in the Register of Parsi Public Trusts.	Nature of the change.	Reasons of the change.	Any further remarks deemed necessary to explain the change.	Registrar's orders.
1	2	3	4	5	6	7

Note.—This statement is to be filed with the satement under section 5.

SCHEDULE D.

(*Vide* Rule 10.)

Statement of income *for the year ending*

Serial No. Name of Parsi Public Trust—

Income from immoveable property.				Income from other property including securities (if any).		
Particulars of property. 1	Arrears of income at the end of the previous year. 2	Demand of rent fixed for the current year. 3	Amount realised during the year. 4	Arrears outstanding with details of the year to which they belong. 5	Description of property. 6	Arrears of income at the end of the previous year. 7

Income from other property including securities (if any).			Total realisations and outstandings.		
Amount to be recovered during the current year. 8	Amount realised during the year. 9	Arrears outstanding. 10	Total amount recovered during the year. 11	Total arrears outstanding. 12	Remarks. 13

SCHEDULE E.

(*Vide* Rule 10.)

Statement of expenditure *for the year ending*

Serial No. Name of Parsi Public Trust—

Assessment cesses and other Government dues.	Municipal and other taxes.	Charges incurred for maintenance and necessary improvement of property including repairs.	Pay and allowances of servants.	Ceremonies.	Remuneration to Managers and/or trustees.	Other expenses.	Total expenditure.	Total income.	Balance.
1	2	3	4	5	6	7	8		10

SCHEDULE F.

(*Vide* Rule 17.)

General Register.

Serial No.	Name of trust property.	Where situated.	Name of manager or trustee.	Years of which accounts are submitted.	Date of auditor's report.	Abstract of deeds or instruments of which copies are furnished.	Remarks as to copies given, notices for further information issued, etc.
1	2	3	4	5	6	6A	7

SCHEDULE G.

(*Vide* Rule 21.)

(1) *List of Parsi Public Trusts* *for the year ending 31st March 19* .

Serial No.	Name of Parsi Public Trust.	Taluka and village in which the Parsi Public Trust is situated.	Details of the property of the Public Trust.	The names of Trustees and/or Managers.	Amount contributed to the Parsi Public Trusts Administration Fund.
1	2	3	4	5	6

(2) *Statement of the sums standing to the credit of the Parsi Public Trusts Administration Fund for the year ending 31st March 19* .

Name of the district or area.	Opening balance.	Contributions and receipts during the year	Expenditure.	Closing balance.
1	2	3	4	5

Office of the Registrar.

Registrar of Parsi Public Trusts.

THE BOMBAY LEGISLATURE MEMBERS' SALARIES AND ALLOWANCES ACT, 1937 (BOM. III OF 1937).

G. N., L. D., No. 98, dated 5th January 1938 (B. G., Pt. IV-A, p. 35).

Amended by G. N., L. D., No. 137-L, dated 1st July 1938.
Amended by G. N., L. D., No. 1776, dated 15th February 1939.
Amended by G. N., L. D., No. 1970, dated 27th February 1947.
Amended by G. N., L. D., No. 4309, dated 29th April 1947.
Amended by G. N., L. D., No. 9067, dated 6th September 1947.
Amended by G. N., L. D., No. 13454, dated 29th December 1947.
Amended by G. N., L. D., No. 10, dated 2nd January 1948.

In exercise of the powers conferred by the Bombay Legislature Members' Salaries and Allowances Act, 1937 (Bom. III of 1937), the Government of Bombay is pleased to make the following rules, namely :—

1. *Short title and commencement.*—(1) These rules may be called the Bombay Legislature Members' Salaries and Allowances Rules, 1938.

(2) They shall come into force with effect from 1st November 1937.

2. *Definitions.*—In these rules, unless there be anything repugnant in the subject or context,—

(*a*) "Act" means the Bombay Legislature Members' Salaries and Allowances Act, 1937 ;

(*b*) "Committee" means a committee of a House and includes a joint committee of the two Houses ;

(*c*) "Day" means a calendar day beginning and ending at mid-night ;

(*d*) "Member" means a member of the Assembly or the Council, as the case may be, but does not include a Minister, the President, the Speaker or a Parliamentary Secretary ;

(*e*) The words and expressions used in the Act and not defined in these rules shall have the meanings assigned to them in the Act.

3. *When member not entitled to salary.*—A member who is absent, without permission of the House, from all meetings of the House for a period of sixty days or more computed in the manner provided in article 190 of the Constitution, shall not be entitled to any salary payable under clause (*a*) of sub-section (*1*) of section 3 of the Act for the period of his absence.

4. *Travelling allowances.*—(1) A member who undertakes a journey for the purpose of attending the session of a House or the meeting of a Committee shall be entitled to draw travelling allowance at the rates mentioned below for the journeys to and from the place where such session or meeting is held :—

(*a*) For journeys performed by railway at one and half [1][first class] fare and by steamer at two first class fares or at one first class fare plus Rupees twenty-five, whichever is less ;

[1] The amendment came into force with effect from 5th February 1949.

(*b*) For journeys performed by road, sea, river or canal, in a steam launch or in any vessel other than a steamer, at the rate of [1]five annas per mile :

Provided that if the member performs the journey by road in a hired conveyance, the actual cost incurred by him for hiring the conveyance, in whole or part, shall be drawn, subject to the maximum rate of [1]five annas per mile.

(2) The allowance to be drawn under sub-rule (1) shall not exceed the amount of the allowance that would be admissible to a member for a journey performed by the shortest route from or to the place where he ordinarily resides or carries on his business to or from the place where the session of a House or the meeting of a Committee is held.

Explanation.—The shortest route shall be that by which a member can most speedily reach his destination by the ordinary modes of travelling, provided that if there are two or more such routes, that which is the cheapest shall ordinarily be deemed to be the shortest route. In case of doubt in any case, the State Government shall decide which shall be regarded as the shortest route and such decision shall be final.

(3) Save as provided in rules 7, 8 and 8-A a member may draw travelling allowance only for the journey undertaken by him when first proceeding to attend the session of a House or the meeting of a Committee and for his return journey after the close of such session or meeting.

(4) Notwithstanding anything contained in this rule, if a meeting of a committee is called when a House is in session, a member shall not be entitled to draw travelling allowance for a journey undertaken by him for the purpose of attending such meeting if he has already drawn travelling allowance for the journey performed by him for attending the session of the House.

5. [*Deleted.*]

6. *Member not entitled to allowances if he fails to attend for prescribed period.*—Notwithstanding anything contained in rule 4, a member shall not be entitled to travelling allowance for a journey performed by him for the purpose of attending the meeting of a committee unless he attends the meeting for not less than one whole day, or to conveyance allowance for attending such meeting for any day on which he fails to attend the meeting for at least half the period of its duration on that day :

Provided that Government may sanction the grant of these allowances if failure to attend the meeting for the prescribed period is satisfactorily explained.

Explanation.—For the purposes of this rule, a member shall be deemed to have attended the meeting for one whole day if he attends any meeting for more than half the period of its duration on any day.

---

[1] During the period commencing from the 1st day of May 1949 and ending on the 31st day of March 1950, the Bombay Legislature Members' Salaries and Allowances Rules, 1938, shall have effect as if in clause (*b*) of sub-rule (1) of rule 4 thereof for the word "five" wherever it occurs, the word "seven" had been substituted. This rate will continue in force until the rate of the allowance specified in clause (*b*) of sub-rule (1) of rule 4 is determined by the Bombay Legislature by law.

7. *Travelling Allowance when a session or a meeting is adjourned for ten days or more.*—If any session of a House or a meeting of a Committee is adjourned for ten days or more, a member shall, notwithstanding anything contained in rule 4, be also entitled to draw—

(*a*) if he leaves the place where the session or meeting is held during such period, travelling allowance at the rates admissible under rule 4 for the journey performed by him, after the adjournment of the session or the meeting and also for the journey performed by him to attend the adjourned session or meeting;

(*b*) [*Deleted.*]

8. *Travelling Allowance in cases where a session or a meeting is adjourned for less than ten days.*—If a session of a House or a meeting of a Committee is adjourned for less than ten days, a member shall be entitled to draw—

(*a*) [*Deleted.*]

(*b*) if he leaves such place during such period, travelling allowance at the rates mentioned in rule 4 but not exceeding the amount of daily allowance that was admissible to him immediately before the commencement of the Constitution, if he remained at such place during such period.

8-A. *Travelling Allowance in cases where a meeting of a committee is called at any time within ten days before the commencement of a session or within ten days after the adjournment or prorogation of a session.*—(1) If a meeting of a committee is called within ten days before the commencement of a session, a member who has drawn travelling allowance for the journey performed by him for the purpose of attending such meeting shall be entitled to draw—

(*a*) [*Deleted.*]

(*b*) if he leaves such place during such period, travelling allowance at the rates admissible under rule 4 for the journey performed by him after the adjournment or close of the meeting, as the case may be, and also for the journey performed by him for attending the session, but not exceeding the amount of daily allowance that was admissible to him immediately before the commencement of the Constitution, if he remained at such place during such period.

(2) If a meeting of a committee is called within ten days after a session of a House has been adjourned or prorogued, a member who has drawn travelling allowance for the journey performed by him for the purpose of attending such session shall be entitled to draw—

(*a*) [*Deleted.*]

(*b*) if he leaves such place during such period, travelling allowance at the rates admissible under rule 4 for the journey performed by him after the adjournment or prorogation of the session, as the case may be, and also for the journey performed by him for attending such meeting, but not exceeding the amount of daily allowance that was admissible to him immediately before the commencement of the Constitution, if he remained at such place during such period.

9. *Allowance not to be drawn if it is already drawn in another capacity.*—Notwithstanding anything contained in these rules, a member shall not draw travelling or conveyance allowance admissible under these rules if for the same journey, the same halt or the same attendance he has drawn travelling or conveyance allowance, as the case may be, from the Government Treasury in another capacity.

10. (1) *Travelling allowance may be drawn in advance.*—Members may draw travelling allowance for their final return journey before the completion of such journey.

(2) *Conveyance allowance not to be paid in advance.*—A conveyance allowance shall not be paid in advance to any member.

11. *Audit of bills.*—(1) A bill claiming travelling or conveyance allowance or both, shall be sent by the member concerned direct to the Accountant General, Bombay.

(2) Before the Bill is submitted to the Accountant General the member concerned shall give a certificate in the following form on the bill :—

"Certified that I have not already drawn travelling allowance for the same journey or conveyance allowance for the same attendance in another capacity."

(3) A member claming travelling allowance for a journey performed by him for attending the meeting of a Committee shall certify that he attended such meeting for at least one whole day.

(4) [*Deleted.*]

(4-A) [*Deleted.*]

(4-B) A member claiming travelling allowance for any session of the House or meeting of the Committee shall also certify that he does not ordinarily reside or carry on business at the place where the said session or meeting is held.

(5) If a member performs a journey by road in a hired conveyance, he shall certify on the bill that the allowance claimed by him for the journey by road does not exceed the actual cost incurred by him for hiring the conveyance.

(6) The Accountant General shall audit all such bills and then authorise payment from the treasury from which the member desires payment to be made.

12. *Secretary to House to furnish information to Accountant General.*—The Secretary to the House shall, after the close of every session of the House or the meeting of a Committee, furnish the Accountant General, Bombay, with full information regarding the number of days of attendance of each member and the duration of the session or meeting, as the case may be.

THE BOMBAY PROBATION OF OFFENDERS ACT, 1938 (BOM. XIX OF 1938).

G. N., H. D., No. 5538/3-VI, dated 28th August 1941 (B. G., Pt. IV-B, p. 740).

Amended by G. N., H. D., No. 2668/4-III, dated 25th June 1945.

S. 13 Bombay Probation of Offenders Rules, 1940.

In exercise of the powers conferred by section 13 of the Bombay Probation of Offenders Act, 1938 (Bom. XIX of 1938), the Government of Bombay is pleased to make the following rules, namely:—

1. *Short title.*—These rules may be called the Bombay Probation of Offenders Rules, 1940.

2. *Definitions.*—In these rules, unless there is anything repugnant in the subject or context,—

(1) "the Act" means the Bombay Probation of Offenders Act, 1938;

(2) "District Magistrate" in the City of Bombay means the Chief Presidency Magistrate, Bombay;

(3) "Form" means a form appended to these rules;

(4) "Schedule" means a Schedule appended to these rules;

(5) "Section" means a section of the Act; and

(6) words and expressions used but not defined in these rules shall have the meanings assigned to them in the Act.

3. *Removal and resignation of probation officers.*—A person named by a Court in a supervision order as a probation officer shall cease to be a probation officer—

(*a*) if he is appointed by the State Government, on the suspension or termination of his services by the State Government, or

(*b*) if he is nominated by a recognised society, on the withdrawal of its approval to his nomination by the State Government, or on the cancellation of his nomination by the society, or

(*c*) if he resigns his appointment, on the acceptance of his resignation by the State Government, the recognised society or the Court, as the case may be.

4. *District Magistrate to report to the Court removal or resignation of probation officer.*—If any person named by a Court in a supervision order ceases to be a probation officer under rule 3, the District Magistrate shall forthwith report such fact to the Court.

5. *Duties of probation officers.*—(1) A probation officer shall carry out to the best of his ability the directions given to him by the Court which has named him in a supervision order passed by it in respect of his duties under such order.

(2) A probation officer shall also carry out all general or special orders issued by the District Magistrate within whose jurisdiction the offender placed under his supervision for the time being resides.

(3) A probation officer shall, as soon as may be after an offender is placed under his supervision, explain to such offender the conditions of the bond entered into by him.

(4) Unless otherwise directed in the supervision order, a probation officer shall visit an offender placed under his supervision at the residence of such offender at least once a week during the first three months and at least once a month during the remaining period of the supervision order.

(5) Where an offender placed under the supervision of a probation officer has entered into a bond with sureties, the probation officer shall, from time to time, visit the sureties, if they reside in his district, and keep them informed of the conduct and behaviour of the offender.

(6) A probation officer shall submit monthly reports in respect of the conduct and behaviour of the offender placed under his supervision to the Court which passed the supervision order in such form as the State Government may from time to time direct. He shall also forward a copy of every such report to—

(*a*) the Bombay Provincial Probation and After-Care Association;

(*b*) the District Probation and After-Care Association or the Society doing work under the Act on behalf of the Provincial Association as the case may be.

(7) A probation officer shall also keep such registers and diaries as the State Government may from time to time direct.

6. *Probation officer not to employ offenders.*—A probation officer shall not employ any offender placed under his suprvision for his own private purposes or take any private service from him.

7. *Remuneration and expenses payable to probation officers.*—(1) The remuneration and expenses payable to probation officers nominated by a recognised society shall be such as may from time to time be fixed by such society with the previous approval of Government.

(2) No probation officer appointed by a Court under clause (*c*) of sub-section (*1*) of section 10 shall be entitled to any fixed or monthly remuneration but he may be paid, if the Court so directs, such travelling allowances in connection with his work of supervision as may be admissible to a Government officer of the Second Grade:

Provided that such allowances shall not exceed Rs. 5 per month per offender and Rs. 50 per month in all for all the offenders placed under his supervision.

8. *Forms.*—The forms set forth in the Schedule may be used with such modifications as the Court may think fit for the respective purposes therein mentioned.

THE SCHEDULE.

FORM I.

[Bond for use under section 5 (*1*).]

(Rule 8.)

Bond to keep the peace and to be of good behaviour.

WHEREAS I (name) , inhabitant of (place) , have been ordered to be released by the Court of under sub-section (*1*) of section 5 of the Bombay Probation of Offenders Act, 1938 (Bom. XIX of 1938), on my entering

into a bond to appear and receive sentence when called upon during a period of , and in the meantime to keep the peace and be of good behaviour, I hereby bind myself that I shall—

(1) appear and receive sentence when called upon to do so,

(2) not commit a breach of the peace, or do any act that may occasion a breach of the peace, and

(3) be of good behaviour to Government and all the citizens of India,

during the said period; and in case of my making default therein, I hereby bind myself to forfeit to Government the sum of rupees

Dated this day of 19 .

Signature.

(*Where a bond with sureties is to be executed—Add*)

We do hereby declare ourselves sureties for the abovenamed that he will—

(1) appear and receive sentence when called upon to do so,

(2) not commit a breach of the peace or do any act that may occasion a breach of the peace, and

(3) be of good behaviour to Government and all the citizens of India,

during the said period; and in case of his making default therein, we bind ourselves, jointly and severally, to forfeit to Government the sum of rupees

Dated this day of 19 .

Signature.

FORM II.

[Bond for use by an offender placed under supervision under section 5 (*2*)].

(Rule 8.)

Bond.

WHEREAS I (name)
inhabitant of (place) , have been ordered to
be released by the Court of
under sub-section (*1*) of section 5 of the Bombay Probation of Offenders Act, 1938 (Bom. XIX of 1938), on my entering into a bond to appear and receive sentence when called upon during a period of and in the meantime to keep the peace and be of good behaviour, and to observe the other conditions contained in this bond during the period of specified in he supervision order made by the Court, I hereby bind myself as follows:—

(1) That during the period of I shall—

(*a*) appear and receive sentence when called upon to do so;

(*b*) not commit a breach of the peace or do any act that may occasion a breach of the peace ; and

(*c*) be of good behaviour to Government and all the citizens of India.

(2) That I shall present myself, within fourteen days from the date of the supervision order passed by the Court, before the probation officer C. D. named in that order and will produce before him copies of that order and this bond.

(3) That during the period of specified in the supervision order, I shall also observe the following conditions :—

(*a*) that I shall submit myself to the supervision of the said probation officer or of any other officer appointed in his place, and will obey his directions,

(*b*) that I shall neither change my residence nor remove myself outside the jurisdiction of the Court without informing the said probation officer and without the permission of the Court,

(*c*) that I shall not associate with bad characters or lead a dissolute life,

(*d*) that I shall live honestly and peaceably and will endeavour to earn an honest livelihood,

(*e*) that I shall not commit any offence punishable by any law in force in a Part A State or Part C State

(*f*) that I shall abstain from taking intoxicants, and

(*g*) that I shall carry out such directions, as may from time to time be given to me by the said probation officer, for the due observance of the conditions mentioned above.

In case of my making default in observing any of the conditions specified above, I hereby bind myself to forfeit to Government the sum of rupees .

Dated this day of 19 .

Signature.

(*Where a bond with sureties is to be executed—Add*)

We do hereby declare ourselves sureties for the abovenamed that he will observe all the conditions specified in this bond and in case of his making default therein, we bind ourselves, jointly and severally, to forfeit to Government the sum of rupees .

Dated this day of 19 .

Signature.

FORM III.

[To be used by a Court while passing an order under sub-section (*2*) of section 5.]

(Rule 8.)

In the Court A. B. who appears to be a person under the age of 25 years having been born, so far as has been ascertained, on the day of 19 , has this day been found guilty of an offence.

(State description of offence.)

[State reasons for making an order under sub-section (*2*) of section 5.]

For these reasons, I am satisfied that it is expedient to deal with the said person by making an order under sub-section (*2*) of section 5 of the Bombay Probation of Offenders Act, 1938 (Bom. XIX of 1938), and I therefore hereby order that the bond to be entered into by the said person under sub-section (*1*) of section 5 of the said Act shall contain a condition that the said person shall be under the supervision of C. D., for a period of and the following other conditions, namely :—

(1) that he shall present himself, within fourteen days from the date of this order, before the said probation officer C. D. and shall produce before him copies of this order and the bond executed by him,

(2) that he shall submit himself to the supervision of the said probation officer or of any other officer appointed in his place, and shall obey his directions,

(3) that he shall neither change his residence nor remove himself outside the jurisdiction of the Court without informing the said probation officer and without the permission of this Court,

(4) that he shall not associate with bad characters or lead a dissolute life,

(5) that he shall live honestly and peaceably and will endeavour to earn an honest livelihood,

(6) that he shall not commit any offence punishable by any law in force in India,

(7) that he shall abstain from taking intoxicants, and

(8) that he shall carry out such directions, as may from time to time be given to him by the said probation officer, for the due observance of the conditions mentioned above.

Dated this day of 19 .

Signature of Judge or Magistrate.

THE BOMBAY MEDICAL PRACTITIONERS' ACT, 1938 (BOM. XXVI OF 1938).

G. N., G. D., No. 3334/33, dated 1st November 1939 (B.G., Pt. IV-A, p. 1980).

Amended by G. N., G. D., No. 3334/33, dated 18th February 1942.
Amended by G. N., G. D., No. 3334/33, dated 1st September 1942.
Amended by G. N., G. D., No. 3334/33, dated 9th March 1943.
Amended by G. N., G. D., No. 3334/33, dated 23rd May 1944.
Amended by G. N., G. D., No. 3334/33, dated 16th March 1946.
Amended by G. N., H. & L. G. D., No. 3334/33, dated 7th October 1947.
Amended by G. N., H. & L. G. D., No. 3334/33, dated 29th April 1948.
Amended by G. N., H. & L. G. D., No. 2970/33, dated 24th February 1949.
Amended by G. N., H. & L. G. D., No. 3334/33, dated 4th June 1949.
Amended by G. N., H. & L. G. D., No. 6088/33(a), dated 26th October 1949.
Amended by G. N., L. S. G. & P. H. D., No. 6088/33, dated 23rd January 1950.
Amended by G. N., L. S. G. & P. H. D., No. 6088/33, dated 1st March 1950.

In exercise of the powers conferred by section 29 of the Bombay Medical Practitioners' Act, 1938 (Bom. XXVI of 1938), the Government of Bombay is pleased to make the following rules :—

I.—*Preliminary.*

1. These rules may be called the Bombay Medical Practitioners' Rules, 1939.

2. In these rules, unless there is anything repugnant in the subject or context,—

(1) " Act " means the Bombay Medical Practitioners' Act, 1938.
(2) " Appendix " means an appendix appended to these rules.
(3) " Government " means, the Government of Bombay.
(4) " Section " means a section of the Act.
(5) The words and expressions used in the Act and not defined in these rules shall have the meanings assigned to them in the Act.

II.—*Appointment of members of the Board.*

3. The Registrar shall maintain a list, containing the names of the members elected on the Board, the electorates they represent, the date of election of each such member, the term of his office, and the date of death or retirement of each such member. The list shall also contain similar particulars in regard to the members nominated by Government. The Registrar shall keep the list always up to date so that it may show at a glance when the next election or nomination as the case may be has to be made.

4. Ninety days before the expiration of the term of office of any member appointed on the Board, the Registrar shall make a report in writing regarding the vacancy to the President if the vacancy is to be in respect of an elected member and both to the President and Government if the vacancy is to be in respect of a nominated member.

5. If a vacancy occurs in the office of a member of the Board through resignation, death, removal or disability of such member or otherwise previous to the expiry of his term of office the Registrar shall make a report in writing regarding the vacancy to the President if the vacancy be in respect of an elected member and President as well as Government in case the vacancy be in respect of a nominated member.

III.—*Procedure to be observed for filling vacancies on the Board.*

6. In the case of vacancies of elected members an election shall be held to fill the vacancy. The President or any other person authorised by him in this behalf shall act as the Returning Officer for such election. If the vacancy is to occur in consequence of the expiry of the term of office of a member such Returning Officer shall some time not less than forty-two days and not more than sixty days, before the day on which the term of office of such member is due to expire or, if the vacancy has already ocurred through death, resignation, removal or disability of such member or otherwise, as soon as conveniently may be, after the occurrence of the vacancy, issue a notice to the electorate concerned, requiring the said electorate to elect a member or members by a date mentioned in the notice.

7. The following procedure shall be adopted for the filling of vacancies by election :—

(1) The Electoral Roll shall be prepared by the REGISTRAR from the Register. It shall contain the name, qualifications and address of every person qualified to vote for the election of a member to fill up the vacancy or vacancies.

(2) Candidates qualified for being elected shall be proposed and seconded by persons qualified as electors. No elector shall propose or second the nomination of more persons than are required to fill up the vacancy or vacancies. If more nominations than are required to fill up a vacancy or vacancies be subscribed by the same elector, all nominations subscribed by him shall be held to be void.

(3) The candidate shall sign the nomination paper declaring that he is willing to serve on the Board, if elected. In the absence of such a declaration the nomination shall be treated as invalid.

(4) Every proposal for nomination shall be in writing, and shall be signed by the proposer and seconder, and sent by post or otherwise, so as to reach the Returning Officer not less than forty days before such date as may be appointed by the Board in this behalf.

(4A) Every candidate shall, along with the proposal for nomination, deposit with the Returning Officer a sum of Rs. 250 in cash and he shall not be deemed to be duly nominated unless the said deposit has been made. The deposit shall be forfeited to the Board if the candidate is not elected and the number of votes recorded in his favour is less than one-eighth of the total number of votes recorded. The said deposit shall be returned if it is not forfeited under this sub-rule.

(5) Any candidate shall be at liberty to withdraw his candidature within seven days from the date of his nomination.

(6) If in case of any election the number of candidates duly nominated does not exceed the number required to fill up the vacancy or vacancies, the Returning Officer shall forthwith declare all such candidates to be elected.

(7) If in case of any such election more candidates than are necessary to fill up the vacancy or vacancies are nominated, the Returning Officer shall forthwith publish their names and addresses in the *Bombay Government Gazette* and in such other manner as the Board may deem fit, and shall further cause their names to be entered in voting papers in the Form as laid down in Appendix A.

(8) Twenty-one days before such date as may be appointed by the Board in this behalf, the Returning Officer shall send by post to each elector one such voting paper signed by the Returning Officer, a smaller blank cover with the words " Voting Paper " printed thereon and a bigger cover on which are printed on the left top corner the serial alphabetical number, and the name and signature columns at the lower left corner and the address of the Returning Officer on the said bigger cover, printed as under :—

To
The Returning Officer,
C/o Board of Indian Systems of Medicine,
Bombay 1.

(8A) An elector who has not received his voting paper and other connected papers sent by post or whose papers, before they are despatched back to the Returning Officer have been inadvertently spoiled in such manner that they cannot be conveniently used or who has lost his papers, may on his transmitting to the Returning Officer a declaration to that effect signed by himself, require the Retruning Officer to send him duplicate papers in place of those not received, spoilt or lost ; and if the papers have been spoilt, the spoilt papers shall be returned to the Returning Officer who shall cancel them on receipt. In every case, when duplicate papers are issued, a record thereof shall be kept by the Returning Officer and a mark " Duplicate " shall be placed on the bigger cover which will bear the same serial alphabetical number as was originally given to the said elector. The voting papers issued in such cases shall also be marked " Duplicate ".

(9) Before such date as may be appointed by the Board in this behalf every elector, desirous of voting, shall send his voting paper to the Returning Officer and the Returning Officer shall keep the same collected in sealed boxes :

Provided that any voting paper which is not received by the Returning Officer before 12 noon on the date so appointed for the counting of votes or which does not in any way conform to these rules shall be rejected.

(9A) The President shall nominate as scrutineers such number of members of the Board not exceeding four as he thinks fit.

(10) The Returning Officer shall attend for the purpose of counting the votes on such date and at such time and place as may be appointed by the PRESIDENT in this behalf. Any candidate may also be present either in person or by an accredited representative at the counting of the votes.

(11) When the counting of the votes has been completed, the Returning Officer shall forthwith declare the candidate or candidates, as the case may be, to whom the largest number of votes has been given to be elected, and shall forthwith inform the successful candidate by letter of his having been elected to the Board. Every candidate who is elected shall within such period as may be specified by the Returning Officer in letter singnify to the Returning Officer his acceptance of a seat on the Board. If any candidate thus shown to be elected has withdrawn from the election, of refuses to accept a seat on the Board after election, then one of the remaining candidates to whom the next largest number of votes has been given shall be declared to have been elected in the manner prescribed above in the place of the withdrawing candidate, and the same procedure shall be followed if further vacancies are caused by withdrawal or refusal of a candidate to accept a seat on the Board.

(12) When an equality of votes is found to exist between any candidates, and the addition of a vote will entitle any one or more of the candidates to be

declared elected, the determination of the person or persons to whom such additional vote shall be deemed to have been given shall be made by lot, to be drawn by the Returning Officer in such manner as the PRESIDENT or the person authorised by him in this behalf may determine.

(13) Upon the completion of the counting and after the result has been declared by him, the Returning Officer shall seal the voting papers and all other documents relating to the election and shall retain the same with himself for a period of six months, and thereafter cause them to be destroyed.

(14) The Returning Officer shall notify in the *Bombay Government Gazette* and in such other manner as the Board may think fit, the date, time and place fixed for each of the following proceedings, namely :—

(*a*) the sending of voting papers to the electors under rule 7 (8);

(*b*) the last date for receiving voting papers and the date for the counting of the votes under rule 7 (9) and (10).

(15) The Board may, of its own motion, or on an objection made before it, declare any election, that has been held, to be void on account of corrupt practice or any other sufficient cause and may call on the electorate to make a fresh election. The decision of the Board under this rule shall be final.

(16) If any question arises as to the intention, construction, or application of this rule, which, in the opinion of the Board, should be referred to Government, the Board shall refer such question to Government, whose decision shall be final.

8. After the declaration of the election of any member and when the President himself is not the Returning Officer after the receipt by him of notice of such election from the Returning Officer the PRESIDENT shall inform Government of the same for its publication in the *Bombay Government Gazette*. The notification of the election of a member shall be read by the REGISTRAR at the next meeting of the Board, and the new member shall then be introduced to the meeting by an existing member of the Board. The above procedure shall be adopted also in the case of a member nominated on the Board.

IV.—*Meeting of the Board.*

9. The Board shall ordinarily meet for the transaction of business on the first Monday in the months of February and September in each year.

10. An extraordinary meetin15 g of the Board of whichdays' notice shall be given may be summoned by the PRESIDENT at any time, and shall be summoned by him on a written requisition signed by not less than five members of the Board.

11. All meetings of the Board shall be convened by the Registrar by a summons addressed to each member, stating the time and place of the meeting.

12. The summons convening any meeting shall declare the purpose of the meeting, wether it is general business or any (named) special business, and, at any meeting which is convened for special business, no other business than that specfied in the summons shall be transacted, unless the Board by a resolution at the meating agrees to consider any further business.

13 Prior to any meeting of the Board the Registrar shall under the instructions of the President, prepare a programme of business, and shall furnish a copy thereof to each member of the Board, not less than ten days before the day of the meeting and at the same time forward to all members of the Board copies of the documents and evidence in any cases for disciplinary action to be brought before the Board during that session.

14. Notice of any motion to be inserted in the programme of business of the February or September session must be sent to the Registrar at least fifteen clear days before the beginning of the session.

15. (1) A motion shall not be admissible—

(*a*) if the matter to which it relates is not within the scope of the Board's functions ; or

(*b*) if it raises substantially the same question as a motion or amendment which had been moved and either decided or withdrawn with the leave of the Board within six months of the date of the meeting at which it is designed to move the new motion ; or

(*c*) unless it is clearly and precisely expressed and raises substantially only one definite issue ; or

(*d*) if it contains arguments, inferences, ironical expressions or defamatory statements.

(2) The President shall disallow any motion which in his opinion is inadmissible under sub-rule (1) :

Provided that if a motion can be rendered admissible by amendment the President may, in lieu of disallowing the motion, admit it in an amended form.

(3) When the President disallows or amends a motion the Registrar shall inform the member who gave notice of the motion of the order of disallowance or, as the case may be, of the form in which the motion has been admitted.

16. Notwithstanding anything contained in rules 13 and 14, the President may in his discretion—

(*a*) admit for discussion at any meeting a motion notice of which has not reached the Registrar in time for inclusion in the programme of business sent under rule 13,

(*b*) allow a motion to be discussed at a meeting notwithstanding the fact that notice was received too late to amit of compliance with rule 14.

V.—*Conduct of business at meetings.*

17. (1) Every meeting of the Board shall be presided over by the President or, if he is absent, by a Chairman to be elected by the members present from among themselves.

(2) In this Part all references to the President shall be read as references to the person for the time being presiding over a meeting.

18. For a meeting of the Board eight members including the President or Chairman shall form a quorum. If at the time appointed for a meeting a quorum is not present the meeting shall not commence until a quorum is present and if a quorum is not present on the expiration of 20 minutes from the time appointed for the meeting, the meeting shall stand adjourned to such future date as the President may appoint.

19. (1) Every matter to be determined by the Board shall be determined on a motion moved by a member and put to the Board by the President.

(2) Votes shall be taken by voices, show of hands or division as the President may direct :

Provided that votes shall be taken by division if any member so desires.

(3) The President shall determine the method of taking votes by division.

(4) The result of a division shall be announced by the President and shall not be challenged.

(5) In the event of an equality of votes the President shall, in addition to his vote as a member of the Board, have a second or casting vote.

20. When motions identical in purport stand in the names of two or more members the President shall decide whose motion shall be moved and the other motion or motions identical in purport shall not thereupon be moved.

21. After a motion has been moved any member may, subject to the provisions of rules 22 and 23, move an amendment to the motion:

Provided that the President shall not allow an amendment to be moved which, if it had been a substantive motion, would have been inadmissible under rule 15.

22. (1) An amendment must be relevant to, and within the scope of, the motion to which it is proposed.

(2) An amendment may not be moved which has merely the effect of a negative vote.

(3) The President may refuse to put an amendment which is in his opinion frivolous.

23. (1) If notice of an amendment has not been given two clear days before the date on which the motion is moved, any member may object to the moving of the amendment and the objection shall prevail, unless the President allows the amendment to be moved.

(2) The Registrar shall, if time permits, cause a copy of every amendment to be made available for the use of every member.

24. Every motion or amendment shall be seconded and, if not seconded, shall be deemed to have been withdrawn.

25. (1) When any motion or amendment is under debate no proposal with reference thereto shall be made other than -

(*a*) an amendment of the motion or of the amendment as the case may be;

(*b*) a proposal for the adjournment of the debates on the motion or amendment or both either to a specified time or *sine die;*

(*c*) a motion for the closure, namely, a motion that the question be now put.

(2) It shall be in the discretion of the President to put or refuse to put to the Board a proposal of the nature referred to in clause (*b*) of sub-rule (1).

(3) Unless the President is of opinion that a motion for the closure is an abuse of the right of reasonable debate he shall forthwith put a motion that the question be now put and if that motion is carried the substantive motion or amendment under debate shall be put forthwith:

Provided that the President shall allow the mover of the substantive motion to exercise his right of reply before the substantive motion under debate is put.

26. A motion or an amendment which has been moved shall not be withdrawn save with the leave of the Board which shall not be deemed to be granted, if any member dissents from the granting of leave.

27. (1) When a motion has been moved and seconded, members other than the mover and seconder may speak on the motion in such order as the President may direct:

Provided that the seconder may, with the permission of the President, confine himself, to seconding the motion and speak thereon at any subsequent stage of the debate before the final reply.

(2) No member, other than the mover who shall be entitled to a final right of reply, shall speak more than once on any motion except with the pemission of the President and for the purpose of making an explanation or putting a question to the member addressing the Board :

Provided that a member who has spoken on a motion may speak again on an amendment subsequently moved to the motion.

(3) No member shall, save with the permission of the President, speak for more than ten minutes :

Provided that the mover of a motion when moving the same may speak for twenty minutes.

(4) A speech shall be strictly relevant and confined to the subject-matter of the motion on which it is made.

(5) The business of the Board shall be transacted in English, but any member who is unacquainted or feels that he is not sufficiently acquainted with English may address the Board in any recognised language of the State.

28. (1) A member desiring to make any observations on any matter before the Board shall speak from his place, shall rise when he speaks and shall address the President.

(2) If at any time the President rises, any member speaking shall immediately resume his seat.

29. No member shall be heard except upon the business before the Board or with the special permission of the President in personal explanation in connection with some previous debate.

30. (1) When an amendment to any motion is moved or when two or more such amendments are moved, the President shall, before taking the sense of the Board, thereon, state or read to the Board the terms of the original motion and the amendment or amendments proposed.

(2) It shall be in the discretion of the President to put first to the vote either the original motion or any of the amendments which may have been brought forward.

31. When any motion involving several points has been discussed, it shall be in the discretion of the President to divide the motion, and put each or any point separately to the vote as he may think fit.

32. (1) The President may at any time adjourn any meeting to any future day or to any hour of the same day.

(2) Whenever a meeting is adjourned to a future day, the Registrar shall, if possible, send notice of the adjournment to every member who was not present at such meeting.

(3) When a meeting has been adjourned to a future day, the President may change such day to any other day, and the Registrar shall send written notice of the change to each member.

(4) At a meeting adjourned to a future day any motions standing over from the previous day shall, unless the President otherwise directs, take precedence of new matter.

32A. The President, whenever it appears to him unnecessary to convene a meeting, may instead of so doing, circulate a written proposition with the reasons for such proposition for the observations and votes of the members of the Board.

33. If any question arises with reference to the interpretation of the rules in this Part or with reference to procedure in respect of a matter for which the said rules make no provision, the President shall decide the same and his decision shall be final.

VI.—*Minutes.*

34. The proceedings of the meetings of the Board shall be preserved in the form of printed minutes which shall be authenticated, after confirmation, by the signature of the President.

35. A copy of the minutes of each meeting shall be sent to each member within thirty days of the meeting.

36. The minutes of each meeting shall contain such motions and amendments as have been moved and adopted, or negatived, with the names of the mover and the seconder, but without any comment and without any record of any observation made by any member at the meeting.

37. The minutes shall be deemed to have been confirmed if no objection to their correctness is received by the Registrar from any member within thirty days of the despatch of a copy of the minutes to a member in accordance with rule 35. If any such objection is received, confirmation of the minutes shall await the next meeting of the Board.

38. The minutes of the Board shall, as soon as is practicable after their confirmation, be made up in sheets and consecutively paged for insertion in a volume, which shall be permanently preserved.

VII.—*Executive Committee.*

39. The Executive Committee of the Board shall consist of the President and six members of the Board elected by ballot at the first meeting of the Board in each year.

40. The Executive Committee shall ordinarily meet once every three months on such date as may be fixed by the President.

41. For a Meeting of the Executive Committee four members including the President or Chairman shall be a quorum.

42. If there is any vacancy in the Executive Committee the Committee shall itself fill up such vacancy by election of a member of the Board in such vacancy except in cases where a summons has been issued for a meeting of the Board before the occurrence of such vacancy when the Board itself shall by election fill up the vacancy on the Committee. If any member of the Executive Committee is absent from two consecutive meetings without the leave of the Committee he shall *ipso facto* cease to be a member of the Committee. If the period of absence exceeds three months, a vacancy shall be deemed to have been created.

43. The proceedings of meetings of the Executive Committee shall be preserved in the form of printed minutes which shall be authenticated, after confirmation, by the signature of the President.

44. The Registrar shall be entitled to leave according to the Bombay Civil Service Rules. In the case of the death of the Registrar or his incapacity from illness or his proceeding on leave for more than one month, a person may be appointed to perform temporarily the duties of the Registrar.

45. The Executive Committee shall superintend the publication of the Register and the list of persons in practice on 10th March 1938 which shall be prepared by the Registrar. A statement of the distribution of the copies of the Register and the list to Government Officers as approved by Government and to others, as may be directed by the Executive Committee shall be added to the Register and the list as printed.

46. The Executive Committee shall order each year such number of copies of the Register and the list to be printed as may seem to the Registrar to be required on a revision of the annual distribution list.

47. The Executive Committee shall consider and prepare reports upon any subjects, that may seem to require the attention of the Board, and such reports shall be printed and circulated among the members of the Board at least ten days before the meeting of the Board at which the subject is to come up for discussion.

48. [*Deleted.*]

49. [*Deleted.*]

50. The printing of the volumes of Minutes shall be done under the direction of the Executive Committee.

51. All petitions presented to the Board shall be referred to the Executive Committee to be examined and reported upon before being considered by the Board.

52. Subject to the provisions of the last preceding rule, all petitions addressed to the Board immediately before or during the session of the Board shall be laid upon the table.

53. [*Deleted.*]

54. [*Deleted.*]

55. The Executive Committee shall prepare reports on such subjects as may be indicated to it by the Board at its meetings, or by the President at other times. The reports, when finally approved by the Committee, shall be presented to the Board.

56. The scale of fees for attendance at meetings of the Board and of the Executive Committee, and the travelling expenses for such attendance, shall be paid at the rates set forth in the following rules.

57. The rate of payment for attendance at any meeting of the Board shall be the same for all members of the Board.

58. Every member shall be entitled to a fee of Rs. 15 for each day of attendance at a meeting of the Board.

59. The travelling expenses of members shall be paid as follows :—

(*i*) Officials who are Government servants may draw the travelling and halting allowances which they may be entitled to claim for travelling on official duties according to their grades under the Fundamental Rules or the Bombay Civil Services Rules as the case may be.

[1](*ii*) A non-official member shall draw travelling allowance according to rule 1 1) (*b*) in section 1 of Appendix XLII-A to the Bombay Civil Services Rules Manual, Volume II.

N.B.—If a member actually travels throughout the period of 24 hours between midnight and midnight, a halting allowance shall not be admissible to him on the

[1] This rule took effect from 1st January 1947.

other hand, if he halts for less than 24 hours for a meeting he shall be entitled to such allowance, provided no halting allowance shall be admissible for halts of less than twelve hours' duration.

60. The fees for attendance at meetings of the Executive Committee shall be 15 rupees a day, in addition to the usual travelling expenses as under rule 59.

VII-A.—*Sub-Committee.*

60-A. The Board may appoint sub-committees from amongst its members to report upon any matters which it may deem necessary to refer to them.

60-B. The members of a sub-committee appointed under rule 60-A shall not be entitled to any fee for attending any meeting of the sub-committee. They shall be entitled to travelling expenses under rule 59.

VIII.—*Registrar.*

61. The salary of the Registrar shall with effect from the 1st day of January 1947, be Rs. 200—10—300 per mensem, and he shall receive such allowances as may be admissible to a Government servant on the same salary under the Bombay Civil Services Rules when required to go outside the City of Bombay in connection with the business of the Board.

61-A. The Provident Fund Regulations of the Board of Indian Systems of Medicine Bombay, shall apply to the Registrar.

62. The appointment of the Registrar shall be on probation for the first two years, after which he will be confirmed by the Board with the previous approval of Government if the Board is satisfied as to his efficiency and general conduct. The probationary period may however, be further extended by one year, if considered necessary by the Board.

63. The Registrar shall keep the Register in accordance with the provisions of the Act and these Rules and the Regulations of the Board.

64. The Registrar shall be present at every meeting of the Board and of the Executive Committee, and shall take minutes of the proceedings at such meetings.

65. The Registrar, as Secretary of the Board, shall conduct and have charge of the correspondence of the Board, and shall issue all requisite notices in the manner required under these rules.

66. The Registrar shall fulfil all the duties that may be required of him by these rules and the regulations for the time being of the Board.

67. The Registrar shall, except on public holidays, attend the office from 10–30 a.m. to 5–30 p.m. on Mondays, Tuesdays, Wednesdays, Thursdays and Fridays, and from 10–30 a.m. to 2 p.m. on Saturdays, and at such other times as may be necessary, and shall not remain absent from his duties except with the permission of the President.

68. The Registrar shall have the general control of the management of the office, authority over the clerks and servants and shall superintend the building.

IX.—*Maintenance of Register.*

69. [*Deleted.*]

70. [*Deleted.*]

71. The Registrar shall keep the Register and the list in accordance with the provisions of sections 15 and 18 and shall enter therein in alphabetical order the names of all practitioners registered under the Act with all the relevant particulars required under the said sections.

72. The Registrar shall enter in the Register—on payment of a fee of Rs. 5 in respect of each entry—any additional qualifications approved by the Faculty and obtained by a registered Ayurvedic or Unani practitioner.

73. Each page of the Register shall be verified by the Registrar's signature.

74. Any appeal to the Board against the refusal of the Registrar to register in the case of first registration, or to alter any existing entry in the Register, shall state the grounds on which registration or alteration is claimed and furnish the names of the qualifications and the dates on which they were received. On receipt of such appeal, the Executive Committee shall conduct an enquiry and submit a report to the Board.

75. Every person whose name has been entered on the Register shall be entitled to receive from the Registrar a Certificate of Registration on payment of a fee of Re. 1. Such certificate shall set forth the full name of the person registered, his designation, his address, the date and place of registration and the qualifications in respect of which he has been registered. Such certificate shall be in the Form as laid down in Appendix B.

76. No application for a duplicate certificate of the original registration in the Register shall be entertained but a certificate in the form as laid down in Appendix C may be issued to any one on payment of a fee of Rs. 2.

77. A fee of Rs. 5 shall be levied for registering a change of name in the Register.

78. (1) Every application by a registered practitioner for the removal of his name from the Register at his own request shall be accompanied by a declaration in the form in Appendix F to be made by the applicant that he is not aware of any proceedings or of any reason for the institution of any proceedings which might result in establishing some cause for the removal of his name from the Register without his consent, or for depriving him without his consent of any qualification or licence entitling him to be registered.

(2) The application shall also be accompanied by an undertaking in the form in Appendix G by the applicant that he shall not apply for registration either in Bombay or in any other State in India within a period of two years from the date of the removal of his name, also that he will submit testimonials of two registered practitioners who know him to the effect that he has not committed any act during a period extending from one year previous to the removal under sub rule (1) and application for re-registration which might result in establishing some cause for the removal of his name from the Register without his consent, or in depriving him without his consent of any qualification or licence entitling him to be registered in case he were to apply for registeration after that period.

(3) Every application under sub-rule (1) shall, in the first instance, be referred by the Registrar to the Medical Authorities who granted the applicant his qualification or qualifications, to ascertain whether there is any valid objection to such removal.

(4) The Registrar shall bring such application before the next meeting of the Board or Executive Committee, who will consider the application and any objections thereto, and the President may put from the Chair the question "whether the Registrar shall remove the applicant's name from the Register."

(5) The Registrar shall, upon the removal of the applicant's name from the Register, send notice of such removal to the applicant by a letter addressed to his registered address.

79. The Executive Committee shall re-enter in the Register, if it sees fit, the name of any person which may have been removed therefrom under section 15 but no application for the restoration to the Register of the name of a person which has been removed under section 15 shall be entertained, unless it be accompanied by a declaration in the form in Appendix H made by the applicant setting forth the facts of the case, and stating that he is the person originally registered, and unless it be accompanied also by a certificate in the form in Appendix I as to his identity from two practitioners registered under the Act or in the case of an applicant residing abroad a certificate as to his identity signed by two persons, who shall be magistrates or officers holding a commission in one of Government Services, Civil, Naval or Military or Justices of the Peace or two resident practitioners registered under the Act. A fee of Rs. 5 shall be levied for the registration of practitioners whose names have been removed from the Register under section 15.

80. The Registrar shall once in every five years cause to be printed and published, in the same form as the original Register itself, a correct list of all persons whose names appear in the Register on the 31st December preceding. The Registrar shall keep an interleaved copy of such printed list wherein he shall make, during the year, any entry, alteration or erasure that may be necessary.

81. There shall be shown in the printed list referred to in the last preceding rule,—

(1) the total number of registered practitioners registered in the Register;

(2) the number of registered practitioners added during each of the preceding five years;

(3) the number of registered practitioners whose names have been discontinued during the same period;

(4) the number of registered practitioners removed during the same period from the Register, and the section of the Act under which the name was removed; and

(5) the number of registered practitioners removed during the same period on account of death.

X.—*Penal Removals from the Register.*

82. Whenever information reaches the office of the Board that a registered practitioner has been convicted of a cognizable offence as specified in sub-section (*3*) of section 16, or has been censured by any judicial or other competent authority in relation to his professional character, or has been guilty of conduct which *prima facie* constitues infamous conduct in his professional capacity or is contrary to the code of medical ethics approved by the Board, the Registrar shall make an abstract of such information and shall submit the same to the President,

83. Where the information in question is in the nature of a complaint by a person or body charging the practitioner with infamous conduct in his professional capacity, such a complaint shall be made in writing addressed to the Registrar, and shall state the grounds of complaint and shall be accompanied by one or more declarations as to the facts of the case.

84. Every declaration must state the description and true place of abode of the declarant, and where a fact stated in a declaration is not within the personal knowledge of the declarant, the source of the information and grounds for the belief of the declarant in its truth must be accurately and fully stated. Declarations or parts of declarations which are made in contravention of this rule will not be accepted as evidence.

85. The abstract and, where a complaint, has been lodged, the complaint and all other documents bearing on the case, shall be submitted by the Registrar to the President, who shall, if he thinks fit, instruct the Registrar to ask the practitioner by means of a registered letter for any explanation he may have to offer. The documents, including any explanation forwarded by the practitioner to the Registrar, shall then be referred to the Executive Committee, who shall consider the same, and shall have power to cause further investigation to be made and further evidence to be taken, and to refer the case, if necessary, to the legal adviser to the Board for his advice and assistance, and to instruct him to take the opinion of counsel, and otherwise to obtain such legal advice and assistance as it may think fit. If the Committee is of opinion that a *prima facie* case is not made out, the case shall not be proceeded with further, and the Registrar shall inform the complainant of the Resolution of the Committee. If the Committee is of opinion that the circumstances suggest that a letter of warning be sent, the Committee may do so. If the Committee resolves that the case is one in which an inquiry ought to be held, the President shall direct the Registrar to take steps for the institution of an inquiry, and for having the case heard and determined by the Board.

86. An inquiry for removal of a name from the Register under sub-section (*3*) of section 16 shall be instituted by the issue of a registered notice in writing, on behalf of the Board, by the Registrar addressed to the practitioner. Such notice shall specify the nature and particulars of the charge, and shall inform him of the day on which the Boad intends to deal with the case, and shall call upon the practitioner to answer the charge in writing and to attend before the Board on such day. The notice shall be in the form given in the Appendix D, with such variations as circumstances may require, and shall be sent three weeks before the date of inquiry and shall be accompanied by a copy of sub-section (*3*) of section 16 and of the following rule.

87. In every case in which the Executive Committee resolves that an inquiry shall be instituted and a notice for an inquiry is issued accordingly, eitherparty shall, for the purpose of his defence or reply, as the case may be, and upon request in writing for that purpose signed by himself or his legal adviser, be entitled teo be supplied by the Registrar with a copy of any declaration, explanation, answer or other document given or sent to the Board by or on behalf of the other party, which such other party will be entitled on proper proof to use at the hearing as evidence in support of or in answer to the charge specified in the notice of inquiry; and every notice of inquiry shall draw the particular attention of the practitioner to this rule.

88. Any answer, evidence, or statement forwarded, or application made, by the practitioner between the date of the issue of the notice and the day named for the hearing of the charge, shall be dealt with by the President in such manner as he, under legal advice may think fit.

89. All material documents which are to be laid before the Board as evidence in regard to the case shall be printed and a copy shall be furnished to each member of the Board before the hearing of the case.

90. At the hearing of the case by the Board, its legal adviser may be present to advise it as to the conduct of the case. The complainant and also the practitioner may be represented or assisted by his legal advisers.

91. Where on the day of the hearing a complainant appears personally or by his legal adviser the following shall be the order of procedure :—

(1) The Registrar shall read to the Board the notice of the inquiry addressed to the practitioner.

(2) The complainant shall then be invited to state his case by himself or by his legal adviser and to produce his proofs in support of it. At the conclusion of the complainant's proofs his case will be closed.

(3) The practitioner shall then be invited to state his case by himself or by his legal adviser and to produce his proofs in support of it. He may addresss the Board either before or at the conclusion of his proofs, but only once.

(4) At the conclusion of the practitioner's case, the Board will, if the practitioner has produced evidence, hear the complainant in reply on the case generally, but will admit no further evidence except in any special case in which the Board may think it right to receive such further evidence. If the practitioner produces no evidence the complainant will not be heard in reply except by special leave of the Board.

(5) Where a witness is produced by any party before the Board, he will be first examined by the party producing him, and then cross-examined if necessary by the adverse party, and then re-examined if necessary by the party producing him. The Board shall have the right to decline to admit in evidence any declaration where the declarant is not present for or declines to submit to cross-examination.

(6) The President and the legal adviser, when present, may put questions to any witness, and members of the Board, through the President, may also put questions to any witness.

92. Where there is no complainant or no complainant appears on the day of the hearing, the following will be the order of procedure :—

(1) The Registrar will read to the Board the notice of inquiry addressed to the practitioner, and will state the facts of the case and produce before the Board the evidence by which it is supported.

(2) The practitioner will then be invited to state his case by himself or by his legal adviser and to produce his proofs in support of it. He may address the Board either before or at the conclusion of his proofs, but only once.

(3) The legal adviser to the Board may be heard in reply if the Board so desires.

93. Upon the conclusion of the case, the Board will deliberate thereon in camera and at the conclusion of the deliberations the President shall, for the purpose of

summing up the result of the deliberations, call upon the Board to vote on such of the following resolutions to be put from the chair as may be applicable to the circumstances of the case :—

(1) In the case of a practitioner who has been convicted of a cognizable offence :—

That has been proved to have been convicted of a cognizable offence as defined in the Code of Criminal Procedure, 1898, alleged against him in the notice of inquiry.

(2) In the case of a practitioner charged with infamous conduct in a professional capacity :—

(*a*) *That the Board do now proceed to decide whether the facts alleged against in the notice of inquiry have been proved or have not been proved.*

If this resolution is carried, the Board shall be called upon by the President to vote on the following resolution to be put from the chair :—

(*b*) *That the facts [or the following facts (specifying them)] alleged against in the notice of inquiry have been proved to the satisfaction of the Board.*

If this resolution is carried, the Board may either proceed to judge whether, on the facts proved, the accused practitioner has been guilty of infamous conduct in a professional capacity and if so to direct the Registrar to remove his name from the Register, or may postpone its judgment and adjourn the case until the next or some other session.

(3) In the case of a practitioner convicted of a cognizable offence or charged with infamous conduct in a professional capacity, for the purpose of deciding whether or not the judgment of the Board on the conviction (or facts) proved shall be postponed, the Board shall be called upon by the President to vote on the following resolution to be put from the chair :—

(*c*) *That the Board do now proceed to pronounce its judgment on the conviction (or facts) proved against—*

If this resolution is not carried, the judgment of the Board will stand postponed till the next or some other future session of the Board as the Board shall direct, and the case will be taken at such next or other session as a case in which judgment has been postponed.

If this resolution is carried, the Board shall proceed at once to pronounce its judgment on the case, and shall be called upon by the President to vote upon the following resolution to be put from the chair :—

In the case of a conviction :—

(*d*) *That having been proved to have been convicted of a cognizable offence alleged against him in the notice of inquiry, the Registrar be directed to remove his name from the Register.*

In the case of a practitioner charged with infamous conduct in a professional capacity :—

(*e*) *That the Board do now judge to have been guilty of infamous conduct in a professional capacity, and do direct the Registrar to remove from the Register the name of*

If resolution (*d*) or (*e*) as the case may be, is not carried, the President may announce the judgment of the Board in the form :—

That the Board does not see fit to direct the Registrar to remove from the Register the name of

94. In the event of an adjournment of the hearing, or of a postponement of the judgment, to another session, the Board, on the case coming on again for consideration, may hear the practitioner, and the complainant (if any), and receive such further evidence in relation to the charge, and in relation to the conduct of the accused practitioner subsequent to the last hearing of the charge by the Board, as it may think fit.

Notice in writing shall be given by the Registrar to the practitioner, and to the complaint (if any), of the day fixed for the further consideration. The notice shall request the attendance of the practitioner on that day before the Board; and the complainant and the practitioner shall each be requested to furnish to the Registrar in writing, not less than fifteen days before the day so fixed, a statement in writing of any further facts or evidence which he may desire to be laid before the Board. The notice shall be given so as to allow at least twenty-eight days between the day on which the notice is given and the day appointed for the further consideration. No further facts or evidence presented by a party to the inquiry shall be received or considered by the Board, unless a statement thereof has been previously furnished to the Registrar in compliance with this rule.

95. (1) On the case coming up before the Board for further consideration, the legal adviser to the Board, if present, or the Registrar, when the legal adviser is not present, shall, if necessary, state the facts and explain the position of the case to the Board. The practitioner shall then be invited to address the Board, either personally or by his legal adviser and lay before the Board any further facts or evidence of which he may have duly given notice to the Registrar; and the complainant (if any) shall then be invited to address the Board, either personally or by his legal adviser and lay before the Board, any further evidence of which he shall have duly given such notice.

(2) At the conclusion of the further hearing, the Board shall deliberate on the case in camera; and at the conclusion of the deliberations the President shall call upon the Board to vote in an adjourned case on the same resolution as at the original hearing, and in a case in which judgment was postponed on resolutions (*c*) and (*d*) or (*c*) and (*e*) in rule 93, as the case may be.

96. When the Board has received notice from a licensing body that any qualification has been duly and legally withdrawn from a registered practitioner by such body, the Board shall, if it thinks fit, by formal resolution put by the President from the chair, direct the Registrar to remove such qualification or qualifications from the Register as appertain to such medical practitioner.

97. If, under the direction of the Board, all the qualifications of any registered practitioner have been removed from the Register, then the Board shall, if it thinks fit, by formal resolution put by the President from the chair, direct the Registrar to remove the name of such practitioner from the Register.

98. The Registrar shall, upon the removal of any name from the Register, pursuant to the provisions of the preceding rules, or of a direction made under sub-section (3) of section 16, forthwith send notice of such removal to the practitioner, and such notice shall be sent by a registered letter addressed to the

last known address, or to the registered address of the practitioner. The Registrar shall also send, forthwith, intimation of any such removal to the Dean or Secretary or other proper officer of any body or bodies from which the practitioner had received his qualification or qualifications.

99. The Registrar shall, within one month after any names have been removed from the Register by order of the Board under a direction made under sub-section (*3*) of section 16 send to the bodies concerned a list of all such names, and shall call the attention of each licensing body to the following rule of the Board :—

"The Board recommends that no person whose name has been once removed from, and has not been restored to, the Register shall, without previous reference to it, be admitted to an examination for any new qualification which is registerable in the Register."

XI.—*Restoration of names to the Register.*

100. Applications for re-entering in the Register a name removed under sub-section (*3*) of section 16 shall be entertained at the next session of the Board.

101. If any person whose name has been removed from the Register by direction of the Board and who makes application to the Board for re-entering his name in the Register, the following shall be the procedure :—

(*i*) The application shall be in writing, addressed to the Board, and signed by the applicant, and must state the grounds on which the application is made.

(*ii*) No application for re-entering in the Register the name of a person which has been removed under a direction made under sub-section (*3*) of section 16 shall be entertained unless it is accompanied by a declaration made by the applicant setting forth the facts of the case, and stating that he is the person originally registered, and by a certificate from two practitioners registered under the Act as to his identity, or in the case of an applicant residing outside the State of Bombay an identity certificate signed by two persons who shall be magistrates or officers holding a commission in one of Government. Services, civil, naval or military, or Justices of the Peace, or two practitioners registered under the Act and resident in this State.

(*iii*) The statements in the application must also be verified by certificates in writing, to be given by a Justice of the Peace and by a registered practitioner resident in the neighbourhood where the applicant had been residing since his removal, who were and are well acquainted with him before and since the removal of his name, and they must testify to his present good character.

(*iv*) On receipt of the application, it shall be referred by the Registrar to the Executive Committee, for consideration and report. Before an application is considered by the Committee, the Registrar shall notify the same to the licensing bodies whose qualifications were held by the applicant at the time his name was removed ; and shall further, by letter addressed to the person or body (if any) on whose complaint the applicant's name has been erased, give notice of the application and of the time when the Committee intends to consider the same.

(*v*) The Executive Committee shall consider the application and may, if it thinks fit, adjourn the consideration to a future date or require further evidence or explanations from the applicant.

(*vi*) The Executive Committee shall *in camera* consider the application and submit a report upon it to the Board embodying in such report such recommendations as the Committee may think fit to make together with the reasons for the recommendations.

(*vii*) The declaration and certificate under sub-rule (*ii*) shall be in Forms 1 and 2 given in Appendix E with such variations as circumstances may require. The certificate of identity shall be in Form 3 in the said Appendix E. Printed forms shall be kept by the Registrar who shall supply them to intending applicants.

XII.—*Certain provisions applicable to practitioners in practice on the 10th March 1938.*

102. The provisions of Parts X and XI shall apply *mutatis mutandis* to practitioners whose names are entered in the list of persons in practice on the 10th March 1938, maintained under section 18.

XIII.—*Corporate Seal.*

103. The Board shall have a corporate seal and the seal shall be kept in a box having two different locks. The key of one of these locks shall be in the custody of the President, and that of the other in the custody of the Registrar.

104. The seal shall be affixed only by order of the Board or, when the Board is not sitting, by order of the Executive Committee; but its use by such Committee shall be limited to such acts as may be necessary to carry into effect the powers delegated and duties entrusted to it by the Board.

105. Any order for affixing the seal shall state the object of its use, and shall be entered in the minutes of the Board or of the Executive Committee, as the case may be.

XIV.—*Application of fees.*

106. An account shall be opened in the Imperial Bank of India, Bombay, in the name of the Board and all monies of the Board shall be deposited in the Bank, subject to the reservation mentioned in rule 107.

107. The Registrar shall receive all monies payable to the Board. He shall not retain in his hands a sum exceeding Rs. 200, the balance being lodged in the Bank to the credit of the Board.

108. The Registrar shall in the month of July in each year prepare a statement of the income and the expenditure of the preceding financial year ending 31st March and draw the attention of the Board to such matters as seem deserving of notice.

109. The annual accounts shall be made up by the Registrar under the direction of the Executive Committee. They shall be audited by the Local Fund Audit Department as soon as possible after the close of each financial year.

110. In the month of September in each year an estimate of the revenue and of the expenditure of the Board for the year commencing on 1st April next ensuing, shall be laid before the Board.

111. Such estimate shall make provision for the fulfilment of the liabilities of the Board and for effectually carrying out its objects. It shall include on its revenue side, besides all revenue ordinarily anticipated, such grant as Government may allot and all fees received from registration and other sources.

112. The Board shall consider the estimate so submitted to it and shal sanction the same either unaltered or subject to such alteration as it may deem fit.

113. The Board may at any time during the year for which any estimate has been sanctioned cause a supplementary estimate to be prepared and submitted to it. Every such supplementary estimate shall be considered and sanctioned by the Board in the same manner as if it were an original annual estimate. No expenditure shall be incurred by the Board which is not duly provided for in the budget or in a supplementary budget estimate.

114. A bill or other voucher presented as a claim for money shall be received and examined by the Registrar. If the claim be for a sum not exceeding Rs. 50, and the bill is in order, he shall pay it. If the claim be for a sum exceeding Rs. 50 payment shall not be made until it has been examined and passed by the Executive Committee.

115. The Registrar shall immediately bring into account in the general cash book all monies received or spent by the Board.

115-A. Any money received by the Board in advance towards payment of fees shall, if not claimed by the person entitled thereto within a period of three years, be credited at the end of the month of March next following to the account of the Board.

116. All cheques on the Bank shall be signed by any one member of the Executive Committee and by the Registrar.

XV.—*Renewal Fees.*

117. Each practitioner whose name was entered in the Register or list on or before 26th October 1949, shall pay in advance a renewal fee of rupees five every three years for the continuance of his name in the Register or list, as the case may be, the first of such renewal fee being payable before the 31st December 1951 for the period of three years beginning with the 1st January 1952.

118. The entry of the name of a person in the Register or list under section 15 and section 18 respectively made after 26th October 1949 shall remain valid for the calendar year in which the name has been entered in the Register or list, as the case may be, and for two immediately succeeding calendar years, and shall be renewable every three years on payment in advance of a fee Rs. 5.

119. If default is made in payment of a renewal fee, the name of the defaulter shall be removed from the Register or list, as the case may be. If the defaulter pays a fresh registration fee of Rs. 5 together with the renewal fee, his name shall be entered in the Register or list, as the case may be.

XVI.—*Applications under sub-section (2) of section 31C.*

120. Every application under sub-section (*2*) of section 31C shall be accompanied by a declaration on oath before an officer competent to administer an oath under the Indian Oaths Act, 1873, stating the facts of the case.

121. The Registration Tribunal (hereinafter called the Tribunal) shall then refer the application both to the Mamlatdar and Medical Officer of the area in which the applicant was practising on 4th November 1941, for their remarks as to—

(1) whether the applicant is or is not a refugee or other person referred to in sub-section (*1*) of section 31C;

(2) whether he was practising at the place mentioned by him in his application on 4th November 1941;

(3) whether he was regularly practising for the period mentioned by him in his application before 4th November 1941; and

(4) whether he was dependent on his practice for his livelihood.

122. The Tribunal may also require the applicant to state the reasons why no application was made on or before the 4th November 1941, or may call the applicant for an interview or call for any proof in verification of the statement made in the application or any other information which the Tribunal thinks fit to obtain.

123. After making the above enquiry, the Tribunal may direct the entry of the names in the Register or list in accordance with the following rules :—

(*a*) If the Tribunal is satisfied that the applicant has passed any of the examinations specified in the Schedule to the Act and that he could not apply for entering his name in the Register before the 4th November 1941 for sufficient and adequate reasons, it shall direct that his name shall be entered in the Register ;

(*b*) If the Tribunal is satisfied that the applicant is not a refugee or other person referred to in sub-section (*1*) of section 31C and that he was practising on the 4th November 1941, and that he could not make an application for entering his name in the Register or list before the 4th November 1941 for sufficient and adequate reasons, it shall direct that his name may be entered in the list.

APPENDIX A.

[Rule 7 (7).]

FORM.

[*See* Rule 7 (7).]

Voting Paper.

Members are to be elected to the Board of Indian Systems of Medicine by the person entered in the electoral roll.

Serial No.	Name of candidates duly nominated.	Vote.

Returning Officer.

INSTRUCTIONS.

(1) Each elector has votes.

(2) He shall vote by placing the mark × opposite the names of the candidates whom he prefers.

(3) The Voting papers shall be invalid if the mark × is placed opposite the names of more than candidates, or if the marks are so placed as to render it doubtful to which candidates they are intended to apply.

(4) The elector shall enclose the voting paper duly filled in, in the smaller cover and enclose that cover in the bigger cover supplied by the Returning Officer and shall write his full name (which may be typewritten) and signature in the left hand corner of the bigger envelope in the printed columns therefor. If the elector fails so to write his full name and signature, the voting paper shall be invalid.

(5) Every elector shall send his voting paper in a separate cover direct to the Returning Officer, whose address is given below.

(6) If the Returning Officer receives more than one voting paper from the same elector, all such voting papers shall be treated as invalid.

(7) If more than one mark is placed before the name of any candidate the whole voting paper shall be treated as invalid.

(8) *Address of Returning Officer.*—This should be filled by the Returning Officer before the voting paper is sent.

APPENDIX B.

(Rule 75.)

REGISTRATION CERTIFICATE.

Office of the Board of
Indian Systems of Medicine :
Bombay, 19 .

Certificate No.

I hereby certify that Mr.
has been registered under the Bombay Medical Practitioners' Act, 1938, as on at Bombay.

Qualifications :

Address :

Note.—This certificate remains evidence of Registration only until the publication of the Printed Register for 194 .

Registrar.

Important Notice.

Every Registered Practitioner should be careful to send to the Registrar immediate notice of any change in his address, and also to answer all inquiries that may be sent to him by the Registrar in regard thereto, in order that his correct address may be duly inserted in the Register : otherwise under section 15 (*5*) of the Bombay Medical Practitioners' Act, 1938, such practitioner is liable to have his name removed from the Register.

APPENDIX C.

(Rule 76.)

Office of the Board of
Indian Systems of Medicine :
Bombay, 19 .

Certificate No.

Mr. has been registered under the Bombay Medical Practitioners' Act, 1938, as on at Bombay.

Qualifications :

Address :

Note.—This certificate remains evidence of registration only until the publication of the printed Register for 194 . It is NOT nor must it be used as evidence of the identity of the holder with the person named herein.

Registrar.

APPENDIX D.

(Rule 86.)

Notice to a registered practitioner to attend proceedings for removal of his name from the Register, under section 16(3) of the Bombay Medical Practitioners' Act, 1938.

Sir,

On behalf of the Board of Indian Systems of Medicine, Bombay, I give you notice that information and evidence have been laid before it by which the complainants make the following charge against you, namely :—[Here set out the circumstances briefly] and that in relation thereto you have been guilty of infamous conduct in a professional capacity.

Or that you were, on the day of convicted of the following [offence] at namely :—
[Set out particulars of the conviction]

And I am directed further to give you notice that on the day of of 19, a meeting of the Board will be held at o'clock in the to consider the abovementioned charges against you, and decide whether or not they should direct your name to be removed from the Register, pursuant to section 16 (*3*) of the Bombay Medical Practitioners' Act, 1938. You are invited and required to answer in writing the above charges and to attend before the Board at the above named time and place, to establish any denial or defence that you may have to make to the abovementioned charges and you are hereby informed that if you do not attend as required without proper cause, the Board shall proceed to hear and decide upon the said charges in your absence.

Any answer or other communication or application which you may desire to make respecting the said charges, or your defence thereto, must be addressed to me and transmitted so as to reach me not less than * days before the day appointed for the hearing of the case.

* To be filled in.

A copy of section 16 (*3*) of the Bombay Medical Practitioners' Act, 1938, and of certain Rules of the Board, to which your particular attention is invited, is enclosed herewith for your information.

(Signed)

Registrar.

APPENDIX E.

[Rule 101 (*vii*).]

FORM No. 1.

Statutory declaration by applicant for re-entering his name in the Register.

To the Board of Indian Systems of Medicine, Bombay.

(*i*) I, the undersigned[1]

now holding the qualification[2]
do solemnly and sincerely declare that the following are the facts of my case, in reason of which I seek re-entry of my name in the Register.

(*ii*) In the year[3] my name was duly registered in the Register in respect of the following qualifications, namely[4] , and at the date of the removal of my name hereinafter mentioned I was registered in respect of the same qualifications, [and also in respect of the following additional qualifications, namely,].

(*iii*) At an inquiry held on the[6] day of the Board of Indian Systems of Medicine directed my name to be removed from the Register on a complaint made to it by[7] of and the offence for which the Board directed the removal of my name was[8]

(*iv*) Since the removal of my name from the Register I have been residing at [9] and my occupation has been.

(*v*) It is my intention if my name is restored to the Register to [10]

(*vi*) The grounds of application are [11]

(Signed)

Declared at on

before me, Justice of the Peace, etc.

(1) Insert full name.

(2) Insert qualifications, if any.

(3) Insert date.

(4) Insert original qualifications.

(5) To be added, if necessary.

(6) Insert date of inquiry.

(7) Insert name and address of complainant,

(8) Insert charges on which name was removed.

(9) The paragraph blanks in this must be filled in according to circumstances.

(10) Insert particulars as to proposed future professional occupation.

(11) All facts and grounds on which the application is made should be clearly and concisely stated.

FORM No. 2.

Certificate in support of Application.

I, of

certify as follows :—

(i) I am [1]

(1) State whether a. J. P. or a Registered Practitioner.

(ii) I have read paragraphs (iv) and (v) of the application of and say that I have been and am well acquainted with the said both before and since his name was removed from the Register, that I believe him to be now a person of good character, and that the statements in the said paragraphs are to the best of my knowldge, information, and belief, true.

(Signed)

(Name)

(Address and qualifications).

FORM No. 3.

Certificate of Identity.

I hereby certify that the aforesaid applicant is the above specified whose name formerly stood in the Register with the following address and the qualifications :—*

* Here insert applicant's former address and registered qualifications.

† Here insert name and address of person certifying.

Name†

Address†

Registered qualifications

Date

APPENDIX F.

[Rule 78 (1).]

Statutory declaration accompanying the application for removal of name.

I, the undersigned (1) now holding the qualification (2) and having the following permanent address, viz., do solemnly declare as follows :—

(*i*) In the year (3) my name was duly registered in respect of the following qualification, namely (4)

(*ii*) I am not aware of any proceedings or of any reason for the institution of any proceedings which might result under the Act or rules thereunder is establishing some cause for the removal of my name from the Register or depriving me of any qualification or licence entitling me to be registered.

(*iii*) The grounds for the removal of name are (5)

(*iv*) It is my intention if my name is removed from the Register to (6)

Signed.

(1) Insert full name.
(2) Insert qualification, if any.
(3) Insert date.
(4) Insert original qualification.
(5) All grounds for the application should be clearly and concisely stated.
(6) Insert particulars as to proposed future professional occupation.

APPENDIX G.

[Rule 78 (2).]

Undertaking accompanying application for removal of name.

To the Board of Indian Systems of Medicine, Bombay.

I, the undersigned[1] having applied under rule 78 for the removal of my name from the Register hereby bind myself that :—

(*i*) I shall not apply for registration either in the State of Bombay or in any other State in India within a period of two years from the date on which my name would be removed.

(*ii*) In case I apply for re-registration after the expiry of the said period of two years, I will submit testimonials of two registered practitioners who know me to the effect that I have not committed any act during a period commencing from the year previous to the date of the removal of my name and ending on the date of the application for the re-registration of my name which may result under the Act or rules thereunder in establishing some cause for the removal of my name from the Register or depriving me of any qualification or licence entitling me to to be registered.

Dated the

Signed.

[1] Insert full name.

APPENDIX H.

(Rule 79.)

Declaration for re-entry of name in Register.

To the Board of Indian Systems of Medicine, Bombay.

I[1] now holding the qualification[2] and having the following permanent address, viz.[3] do solemnly declare as follows :—

(*i*) In the year[4] my name was duly registered in the Register in respect of qualification viz.[5] and at the date of the removal of my name, I was registered in respect of the same qualification and also in the respect of the following additional qualifications viz.[6]

(*ii*) My name was removed from the Register on[7] as no answer was received by the Registrar to a letter written by him under section 15 of the Act within six months of its despatch, for the reason[8]

(*iii*) Since the removal of my name from the Register I have been residing at[9] and my occupation has been[10]

(*iv*) The grounds of application are[11]

Signed.

(1) Insert full name.
(2) Insert qualification if any.
(3) Insert permanent address.
(4) Insert date.
(5) Insert original qualification.
(6) To be added if necessary.
(7) Insert date.
(8) Fill the blank according to circumstances.
(9) and (10) Fill the blanks according to circumstances.
(11) All facts and grounds for the application should be clearly and concisely stated.

APPENDIX I.

(Rule 79.)

Certificate of Identity.

I hereby certify that the applicant Mr.[1] is known to me personally for the last[2] and he is the same person whose name formerly stood in the Register with the following address and qualification[3]

I know he is practising at present at the following address[4]

Signed.

Registered Medical Practitioner

Registration Certificate No.

(or Justice of the Peace)

(or Magistrate)

(or Officer holding commission in the Armed Forces of the Union.)

(1) Insert name of applicant in full.
(2) Insert period of acquaintance.
(3) Insert address and qualification entered in the Register against the applicant's name.
(4) Insert the applicant's present address.

G. N., H. & L. G. D., No. 6088/33, dated 22nd July 1949 (B. G., Pt. IV-B, p. 1561).

Amended by G. N., L. S. G. & P. H. D., No. 6088/33, dated 21st April 1950.

S. 29 Bombay Faculty of Indian Systems of Medicine Rules, 1949.

In exercise of the powers conferred by section 29 of the Bombay Medical Practitioners' Act, 1938 (Bom. XXVI of 1938), the Government of Bombay is pleased to make the following rules :—

I. Preliminary.

1. These rules may be called the Bombay Faculty of Indian Systems of Medicine Rules, 1949.

2. In these rules, unless there is anything repugnant in the subject or context,—

(1) " Act " means the Bombay Medical Practitioners' Act, 1938 ;

(2) " Appendix " means an appendix appended to these rules ;

(3) " Government " means the Government of Bombay ;

(4) " Section " means a section of the Act ;

(5) The words and expressions used in the Act and not defined in these rules shall have the meanings assigned to them in the Act.

II. Appointment of Members of the Faculty.

3. The Registrar shall maintain a list, containing the names of the members elected on the Faculty, the electorates they represent, the date of election of each such member, the term of his office, and the date of death or retirement of each such member. The list shall also contain similar particulars in regard to the members nominated by Government. The Registrar shall keep the list always up-to-date so that it may show at a glance when the next election or nomination as the case may be has to be made.

4. Ninety days before the expiration of the term of office of any member appointed on the Faculty, the Registrar shall make a report in writing regarding the vacancy both to the Chairman and Government.

5. If a vacancy occurs in the office of a member of the Faculty through resignation, death, removal or disability of such member or otherwise previous to the expiry of his term of office the Registrar shall make a report in writing regarding the vacancy to the Chairman as well as Government.

III. Procedure to be observed for filling vacancies on the Faculty.

6. In the case of vacancies of elected members an election shall be held to fill the vacancy. The Chairman or any other person authorised by him in this behalf shall act as the Returning Officer for such election. If the vacancy is to occur in consequence of the expiry of the term of office of a member such Returning Officer shall some time not less than twenty-eight days and not more than thirty-five days before the day on which the term of office of such member is due to expire or, if the

vacancy has already occurred through death, resignation, removal or disability of such member or otherwise, as soon as conveniently may be, after the occurrence of the vacancy, issue a notice to the electorate concerned, requiring the said electorate to elect a member or members by a date mentioned in the notice.

7. The following procedure shall be adopted for the filling of vacancies by election :—

(1) For the purpose of preparing electoral rolls the Registrar shall call upon the Principals or Heads of recognised institutions to send all information regarding themselves as well as recognised teachers in their institutions and shall prepare Electoral Rolls from the information so supplied by them.

(2) Candidates qualified for being elected shall be proposed and seconded by person qualified as electors. No elector shall propose or second the nomination of more persons than are required to fill up the vacancy or vacancies. If more nominations than are required to fill up a vacancy or vacancies be subscribed by the same elector, all nominations subscribed by him shall be held to be void.

(3) The candidate shall sign the nomination paper declaring that he is willing to serve on the Faculty, if elected. In the absence of such a declaration the nomination shall be treated as invalid.

(4) Every proposal for nomination shall be in writing, and shall be signed by the proposer and seconder, and sent so as to reach the Returning Officer not less than twenty-one days before such date as may be appointed by the Government in this behalf.

(5) Any candidate shall be at liberty to withdraw his candidature within five days from the date of his nomination.

(6) If in case of any election the number of candidates duly nominated does not exceed the number required to fill up the vacancy or vacancies, the Returning Officer shall forthwith declare all such candidates to be elected.

(7) If in case of any such election more candidates than are necessary to fill up the vacancy or vacancies are nominated, the Returning Officer shall forthwith publish their names and addresses in the *Bombay Government Gazette* and in such other manner as the Faculty may deem fit, and shall further cause their names to be entered in voting papers in the Form as laid down in Appendix A.

(8) Fourteen days before such date as may be appointed by the Government in this behalf, the Returning Officer shall send by post to each elector one such voting paper signed by the Returning Officer, a smaller blank cover with the words "Voting Paper" printed thereon and a bigger cover on which are printed on the left top corner the serial alphabetical number, and at the lower left corner the name and signature columns and the address of the Returning Officer as given below :—

"To
The Returning Officer,
C/o Faculty of Indian Systems of Medicine, Bombay 1."

An elector who has not duly received his voting paper and other connected papers or whose voting paper or other connected papers after receipt by him have been spoiled or misled may, on his informing the Returning Officer and

making a declaration in writing to that effect signed by himself and returning to the Returning Officer the spoiled paper, require the Returning Officer to send to him a duplicate voting paper and other connected papers. In every case, when duplicate voting paper and other connected papers are issued a record thereof shall be kept by the Returning Officer. A voting paper as well as a bigger cover issued in such cases shall bear the words " duplicate ".

(9) (*i*) Before such date as may be appointed by the Government in this behalf every elector, desirous of voting, shall send his voting paper to the Returning Officer, and the Returning Officer, shall keep the same collected in sealed boxes, provided that any voting paper which is not received by the Returning Officer before 12 noon on the date so appointed for the counting of votes or which does not in any way conform to these rules shall be rejected.

(*ii*) The Chairman shall nominate as scrutineers such number of members of the Faculty not exceeding four as he thinks fit.

(10) The Returning Officer shall count the votes at such time and place as may be appointed by the Chairman in this behalf. Any candidate may also be present either in person or by an accredited representative atthe counting of votes.

(11) When the counting of votes has been completed, the Returning Officer shall forthwith declare the candidate or candidates, as the case may be, to whom the largest number of votes has been given to be elected, and shall forthwith inform the successful candidates by letter of his having been elected to the Faculty. Every candidate who is elected shall within such period as may be specified by the Returning Officer, in writing signify to the Returning Officer his acceptance of a seat on the Faculty. If any candidate declared to have been elected refuses to become a member of the Faculty, one of the remaining candidates to whom the next largest number of votes have been given shall be declared to have been elected in the manner prescribed above and the same procedure shall be followed if further vacancies are caused by the refusal of a candidate to accept a seat on the Faculty.

(12) When an equality of votes is found to exist between any candidates, and the addition of a vote, will entitle any one or more of the candidates to be declared elected, the determination of the person or persons to whom such additional vote shall be deemed to have been given shall be made by lot, to be drawn by the Returning Officer in such manner as the Chairman or the person authorised by him in this behalf may determine.

(13) Upon the completion of the counting and after the result has been declared by him, the Returning Officer, shall seal the voting papers and all other documents relating to the election and shall retain the same with himself for a period of six months, and thereafter cause them to be destroyed.

(14) The Returning Officer shall notify in the *Bombay Government Gazette* and in such other manner as the Faculty may think fit, the time and the place fixed for each of the following proceedings, namely :—

(*a*) Receiving of nomination paper under rule 7 (4) ;

(*b*) The sending of voting papers to the electors under rule 7 (8) ;

(*c*) The last date for receiving voting papers and the date for the counting of the votes under rule 7 (9) and (10).

(15) The Faculty may, of its own motion, or on an objection made before it, declare any election, that has been held to be void on account of corrupt practice

or any other sufficient cause and may call on the electorate to make a fresh election. The decision of the Faculty under this rule shall be final.

(16) If any question arises as to the intention, construction, or application of this rule, which in the opinion of the Faculty, should be referred to Government, the Faculty shall refer such question to Government, whose decision shall be final.

8. After the declaration of the election of any member and when the Chairman himself is not the Returning Officer after the receipt by him of notice of such election from the Returning Officer, the Chairman shall inform Government of the same for its publication in the *Bombay Government Gazette*. The notification of the election of a member shall be read by the Registrar at the next meeting of the Faculty and the new member shall then be introduced to the meeting by the Chairman. The above procedure shall be adopted also in the case of a member nominated on the Faculty.

IV. Meetings of the Faculty.

9. The Faculty shall ordinarily meet for the transaction of business on the first Wednesday in the months of February and September in each year.

10. An extraordinary meeting of the Faculty of which 15 days notice shall be given may be summoned by the Chairman at any time, and shall be summoned by him on a written requisition signed by not less than six members of the Faculty.

11. All meetings of the Faculty shall be convened by the Registrar by a summons addressed to each member, stating the time and place of the meeting.

12. The summons convening any meeting shall declare the purpose of the meeting, whether it is general business or any (named) special business, and, at any meeting which is convened for special business no business other than that specified in the summons shall be transacted, unless the Faculty by a resolution at the meeting agrees to consider any further business.

13. Prior to any meeting of the Faculty, the Registrar shall, under the instructions of the Chairman, prepare a programme of business and shall furnish a copy thereof to each member of the Faculty, not less than ten days before the day of the meeting.

14. Notice of any motion to be inserted in the programme of business for the February or September session shall be sent to the Registrar at least fifteen clear days before the beginning of the session.

15. (1) A motion shall not be admissible :—

(*a*) if the matter to which it relates is not within the scope of the Faculty's functions or,

(*b*) if it raises substantially the same question as a motion or amendment which had been moved and either decided or withdrawn with the leave of the Faculty within six months of the date of the meeting at which it is intended to move the new motion ; or,

(*c*) unless it is clearly and precisely expressed and raises substantially only one definite issue ; or,

(*d*) if it contains arguments, inferences, ironical expressions or defamatory statements.

(2) The Chairman shall disallow any motion which in his opinion is inadmissible under sub-rule (1) :

Provided that if a motion can be rendered admissible by amendment, the Chairman may, in lieu of disallowing the motion, admit it in an amended form.

(3) When the Chairman disallows or amends a motion, the Registrar shall inform the member who gave notice of the motion of the order of disallowance or, as the case may be, of the form in which the motion has been admitted.

16. Notwithstanding anything contained in rules 13 and 14, the Chairman may in his discretion allow a motion to be discussed at a meeting notwithstanding the fact that notice was not received or was received too late to admit of compliance with rule 14.

V. Conduct of business at meetings.

17. Every meeting of the Faculty shall be presided over by the Chairman or, if he is absent, by a person to be elected as Chairman by the members present from among themselves.

18. For a meeting of the Faculty eight members including the Chairman shall form a quorum. If at the time appointed for a meeting a quorum is not present the meeting shall not commence until a quorum is present and if a quorum is not present on the expiration of 20 minutes from the time appointed for the meeting, the meeting shall stand adjourned to such future date as the Chairman may appoint.

19. (1) Every matter to be determined by the Faculty shall be determined on a motion moved by a member and put to the Faculty by the Chairman.

(2) Votes shall be taken by voices, show of hands or division as the Chairman may direct :

Provided that votes shall be taken by division if any member so desires.

(3) The Chairman shall determine the method of taking votes by division.

(4) The result of a division shall be announced by the Chairman and shall not be challenged.

(5) In the event of an equality of votes, the Chairman shall, in addition to his vote as a member of the Faculty have a second or casting vote.

20. When motions identical in purport stand in the names of two or more members the Chairman shall decide whose motion shall be moved and the other motion or motions in purport shall not thereupon be moved.

21. After a motion has been moved any member may, subject to the provisions of rules 22 and 23, move an amendment to the motion :

Provided that the Chairman shall not allow an amendment to be moved which, if it had been substantive motion, would have been inadmissible under rule 15.

22. (1) An amendment must be relevant to, and within the scope of, the motion to which it is proposed.

(2) An amendment may not be moved which has merely the effect of a negative vote.

(3) The Chairman may refuse to put an amendment which is in his opinion frivolous.

23. (1) If notice of an amendment has not been given two clear days before the date on which the motion is moved, any member may object to the moving of the amendment and the objection shall prevail unless the Chairman allows the amendment to be moved.

(2) The Registrar shall if time permits cause a copy of every amendment to be made available for the use of every member.

24. Every motion or amendment shall be seconded and, if not seconded, shall be deemed to have been withdrawn.

25. (1) When any motion or amendment is under debate no proposal with reference thereto shall be made other than—

(*a*) an amendment of the motion or of the amendment, as the case may be ;

(*b*) a proposal for the adjournment of the debates on the motion or amendment or both either to a specified time or *sine die* ;

(*c*) a motion for the closure namely, a motion that the question be now put.

(2) It shall be in the discretion of the Chairman to put or refuse to put to the Faculty a proposal of the nature referred to in clause (*b*) of sub-rule (1).

(3) Unless the Chairman is of opinion that a motion for the closure is an abuse of the right of reasonable debate he shall forthwith put a motion that the question be now put and if that motion is carried the substantive motion or amendment under debate shall be put forthwith. Provided that the Chairman shall allow the mover of the substantive motion to exercise his right of reply before the substantive motion under debate is put.

26. A motion or an amendment which has been moved shall not be withdrawn save with the leave of the Faculty.

27. (1) When the motion has been moved and seconded, members other than the mover and seconder may speak on the motion in such order as the Chairman may direct :

Provided that the seconder, may, with the permission of the Chairman, confine himself to seconding the motion and speak thereon at any subsequent stage of the debate before the final reply.

(2) No member, other than the mover who shall be entitled to a final right of reply, shall speak more than once on any motion except with the permission of the Chairman and for the purpose of making an explanation or putting a question to the members addressing the Faculty :

Provided that a member who has spoken on a motion may speak again on an amendment subsequently moved to the motion.

(3) No member shall, save with the permission of the Chairman, speak for more than ten minutes :

Provided that the mover of a motion when moving the same may speak for twenty minutes.

(4) A speech shall be strictly relevant and confined to the subject matter of the motion on which it is made.

(5) The business of the Faculty shall be transacted in English, but any member may address the meeting in any recognised language of the State.

28. (1) A member desiring to make any observations on any matter before the Faculty shall speak from his place, shall rise when he speaks and shall address the Chairman.

(2) If at any time the Chairman rises, any member speaking shall immediately resume his seat.

29. No member shall be heard except upon the business before the Faculty or with the special permission of the Chairman in personal explanation in connection with some previous debate.

30. (1) When an amendment to any motion is moved or when two or more such amendments are moved, the Chairman shall, before taking the sense of the Faculty, thereon, state or read to the Faculty the terms of the original motion and the amendment or amendments proposed.

(2) It shall be in the discretion of the Chairman to put first to the vote either the original motion or any of the amendments which may have been brought forward.

31. When any motion involving several points has been discussed, it shall be in the discretion of the Chairman to divide the motion and put each or any point separately to the vote as he may think fit.

32. (1) The Chairman may at any time adjourn any meeting to any future day or to any hour of the same day.

(2) Whenever a meeting is adjourned to a future day, the Registrar shall, if possible, send notice of the adjournment to every member who was not present at such meeting.

(3) When a meeting has been adjourned to a future day, the Chairman may change such day to any other day, and the Registrar shall send written notice of the change to each member.

(4) At a meeting adjourned to a future day any motions standing over from the previous day shall, unless the Chairman otherwise directs, take precedence of new matter.

33. The Chairman, whenever it appears to him to be unnecessary to convene a meeting may, instead of so doing, circulate a written proposition with reasons for such proposition for the observations and votes of the members of the Faculty.

34. If any question arises with reference to the interpretation of the rules in this part or with reference to procedure in respect of a matter for which the said rules make no provision, the Chairman shall decide the same and his decision shall be final.

VI. Minutes.

35. The proceedings of the meetings of the Faculty shall be preserved in the form of printed minutes which shall be authenticated after confirmation, by the signature of the Chairman.

36. A copy of the minutes of each meeting shall be sent to each member within thirty days of the meeting.

37. The minutes of each meeting shall contain such motions and amendments as have been moved and adopted, or negatived, with the names of the mover and the seconder, but without any comment and without any record of any observation made by any member at the meeting.

38. The minutes shall be deemed to have been confirmed if no objection to their correctness is received by the Registrar from any member within thirty days of the despatch of a copy of the minutes to a member in accordance with rule 36. If any such objection is received, confirmation of the minutes shall await the next meeting of the Faculty.

39. The minutes of the Faculty, shall, as soon as is practicable after their confirmation be made up in sheets and consecutively paged for insertion in a volume, which shall be permanently preserved.

VII. Executive Committee.

40. The Executive Committee of the Faculty shall consist of the Chairman and four members of the Faculty elected by ballot at the first meeting of the Faculty in each year.

41. The Executive Committee shall ordinarily meet once every month on such date as may be fixed by the Chairman.

42. For a meeting of the Executive Committee three members including the Chairman shall be a quorum.

43. If there is any vacancy in the Executive Committee the Committee shall itself fill up such vacancies by election of a member of the Faculty in such vacancy except in cases where a summons has been issued for a meeting of the Faculty before the occurrence of such vacancy when the Faculty itself shall by election fill up the vacancy on the Committee. If any member of the Executive Committee is absent from three consecutive meetings without the leave of the Committee he shall *ipso facto* cease to be a member of the Committee. If the period of absence exceeds three months, the vacancy shall be deemed to have occurred.

44. The proceedings of the meetings of the Executive Committee shall be preserved in the form of printed minutes which shall be authenticated, after confirmation by the signature of the Chairman.

45. The Executive Committee shall consider all matters concerning the course of training and qualifying examination including the course of training and examinations prior to qualifying examinations and may report to the Faculty on the same.

46. The Executive Committee shall make all arrangements for the holding of examinations including the appointment of examiners, the fixing of dates, centres and programme, declaration of the results and issuing degrees and diplomas.

47. The returns of qualifying examination and examinations prior to qualifying examinations and their results shall be confided to the care of the Executive Committee who shall prepare annually a table of results of such examinations to be laid before the Faculty.

48. The Executive Committee shall arrange for inspections of teaching institutions or examining bodies and shall prepare reports and recommendations regarding their recognition for consideration of the Faculty. The Committee shall be authorised to call from the teaching institutions or examining bodies all information that may be necessary for execution of the Faculty's functions.

49. The Executive Committee shall enquire into all cases for the purposes of carrying into effect the provisions of section 23 relating to the grant of authority to institutions to hold qualifying examinations and shall report to the Faculty the decision arrived by it.

50. All applications, petitions or proposals may be referred to the Executive Committee to be examined and decided or reported upon before being considered by the Faculty.

51. Any application regarding admission, exemptions, concession in terms, arrangements of examinations or results shall be decided first by the Executive Committee.

52. The Executive Committee shall prepare bye-laws required under section 28A for the consideration of the Faculty. The Faculty may adopt, reject, amend or return to the Executive Committee for reconsideration the bye-laws framed by the Executive Committee.

53. The Executive Committee shall consider and prepare report upon any subject, that may seem to require the attention of the Faculty and such report shall be circulated among the members of the Faculty at least ten days before the meeting of the Faculty at which the subject is to come up for discussion.

54. The Executive Committee shall prepare reports on such subjects as may be indicated to it by the Faculty at its meetings, or by the Chairman at other times. The reports when finally approved by the Committee, shall be presented to the Faculty.

VIII. Fees and Allowances payable to Members.

55. The scales of fees for attendance at meetings of the Faculty and of the Executive Committee, and the travelling expenses for such attendance shall be paid at the rates set forth in the following rules.

56. The rate of payment for attendance at any meeting of the Faculty shall be the same for all members of the Faculty.

57. Every member shall be entitled to a fee of Rs. 15 for each day of attendance at a meeting of the Faculty.

58. The travelling expenses of members shall be paid as follows :—

(*i*) Officials who are Government servants may draw the travelling and halting allowances which they may be entitled to claim for travelling on official duties according to their grades under the Bombay Civil Services Rules.

(*ii*) A non-official member shall draw travelling allowance according to rule 1 (1) (*b*) in section 1 of Appendix XLII-A to the Bombay Civil Services Rules Manual, Volume II, as admissible to members of Provincial Committees.

59. The fees for attendance at meetings of the Executive Committee shall be Rs. 15 a day, in addition to the usual travelling expenses as under rule 58.

IX. Sub-Committees.

60. The Faculty may appoint sub-committees to report upon any matters which it may deem necessary to refer to them.

61. The members of the sub-committees shall not be entitled to any fee for attending any meetings of the sub-committee. They shall be entitled to travelling expenses under rule 58.

X. Office of the Faculty.

62. The Registrar shall be present at every meeting of the Faculty and of the Executive Committee and shall take minutes of the proceedings at such meetings.

63. The Registrar shall conduct and have charge of the correspondence of the Faculty and shall issue all requisite notices in the manner required under these rules.

64. The Registrar shall have the general control of the management of the office, authority over the clerks and servants and shall superintend the building.

65. The clerks shall attend the office during office hours and at other times when necessary and shall not be absent from their duties unless by permission from the Registrar. The Executive Committee shall from time to time grant leave to clerks according to the Bombay Civil Services Rules. Leave to peons shall be granted by the Registrar. The Registrar shall be authorised to obtain whatever temporary additional assistance may be required subject to the sanction of the Chairman.

XI. Corporate Seal.

66. The Faculty shall have a corporate seal and the seal shall be kept in a box having two different locks. The key of one of these locks shall be in the custody of the Chairman and that of the other in the custody of the Registrar.

67. The seal shall be affixed only by order of the Faculty or, when the Faculty is not sitting, by order of the Executive Committee; but its use by such committees shall be limited to such acts as may be necessary to carry into effect the powers delegated and duties entrusted to it by the Faculty.

68. Any order of affixing the seal shall state the object of its use, and shall be entered in the minutes of the Faculty or of the Executive Committee, as the case may be.

XII. Application of Fees.

69. An account shall be opened in the Imperial Bank of India, Bombay, in the name of the Faculty and all monies of the Faculty shall be deposited in the Bank, subject to the reservation mentioned in rule 70.

70. The Registrar shall receive all monies payable to the Faculty. He shall not retain in his hands a sum exceeding Rs. 200, the balance being lodged in the Bank to the credit of the Faculty.

71. The Registrar shall in the month of July in each year prepare a statement of the income and expenditure of the preceding financial year ending 31st March and draw the attention of the Faculty to such matters as seem deserving of notice.

72. The annual accounts shall be made up by the Registrar under the direction of the Executive Committee. They shall be audited by the Local Fund Audit Department as soon as possible after the close of each financial year.

73. In the month of September in each year an estimate of the revenue and of the expenditure of the Faculty for the year commencing on 1st April next ensuing shall be laid before the Faculty.

74. Such estimate shall make provision for the fulfilment of the liabilities of the Faculty and for effectually carrying out its object. It shall include on its revenue side, besides all revenue ordinarily anticipated, such grant as Government may allot and all fees received from any sources.

75. The Faculty shall consider the estimate so submitted to it and shall sanction the same either unaltered or subject to such alteration as it may deem fit.

76. The Faculty may at any time during the year for which any estimate has been sanctioned cause a supplementary estimate to be prepared and submitted to it. Every such supplementary estimate shall be considered and sanctioned by the Faculty in the same manner as if it were an original annual estimate. No expenditure shall be incurred by the Faculty which is not duly provided for in the budget or in the supplementary budget estimate.

77. A bill or other voucher presented as a claim for money shall be received and examined by the Registrar. If the claim be for a sum exceeding Rs. 50 payment shall not be made until it has been examined and passed by the Executive Committee. If the claim be for a sum not exceeding Rs. 50, the Registrar shall pay it.

78. The Registrar shall immediately bring into account in the general cash book all monies received or spent by the Faculty.

79. All cheques on the Bank shall be signed by any one member of the Executive Committee and by the Registrar.

XIII. Transitory Provisions.

80. For the purposes of the first election of the Faculty, the procedure prescribed in rules 6, 7 and 8, as far as may be, and the following rules, shall be followed.

81. The institutions recognised by the Board under the Act shall be deemed as recognised institutions.

82. The following teachers in recognised institutions shall be deemed to be recognised teachers :—

(*i*) paid and full time Professors and Lecturers ;

(*ii*) paid and part time or honorary Professors and Lecturers who have given instructions for not less than two periods in a week ;

(*iii*) Demonstrators having qualifications of Lecturers, who have given instructions for not less than four periods in a week :

Provided that if any such Professor, Lecturer or Demonstrator is on leave for a period exceeding four months immediately preceding the date on which the electoral roll of such persons is made he shall not be deemed to be recognised teacher for the purposes of this rule.

APPENDIX A.

[Rule 7 (7).]

FORM.

[See rule 7 (7).]

Voting paper.

Members are to be elected to the Faculty of Indian Systems of Medicine by the persons entered in the electoral roll.

Serial No.	Name of candidates duly nominated.	Vote.

Secretary

INSTRUCTIONS.

(1) Each elector has.....votes.

(2) He shall vote by placing the mark × opposite the names of the candidates whom he prefers.

(3) The voting papers shall be invalid if the mark × is placed opposite the names of more than.....candidates, or if the marks are so placed as to render it doubtful to which candidates they are intended to apply.

(4) The elector shall enclose the voting paper duly filled in, in the smaller cover and enclose that cover in the bigger cover supplied by the Returning Officer and shall write his full name (which may be typewritten) and signature in the left hand corner of the bigger envelope in the printed columns therefor. If the elector fails so to write his full name and signature, the voting paper shall be invalid.

(5) Every elector shall send his voting paper in a separate cover direct to the Returning Officer, whose address is given below.

(6) If the Returning Officer receives more than one voting paper from the same elector, all such voting papers shall be treated as invalid.

(7) If more than one mark is placed before the name of any candidate the whole voting paper shall be treated as invalid.

(8) *Address of Returning Officer.*—This should be filled by the Returning Officer before the voting paper is sent.

G. N., G. D., No. 3330/33, dated 13th April 1940 (B. G., Pt. IV-B, p. 498). S. 32

Amended by G. N., G. D., No. 3330/33, dated 15th October 1941.

In exercise of the powers conferred by the proviso to section 32 of the Bombay Medical Practitioners' Act, 1938 (Bom. XXVI of 1938), the Government of Bombay is pleased to direct that the provisions of section 32 of the said Act shall not apply to the medical practitioners who are employed by the following institutions and who hold such medical qualifications as would entitle them to be registered as qualified medical practitioners in the countries in which they obtained such qualifications :—

1. The American Methodist Mission Hospital, Nadiad, district Kaira.
2. Basel Mission Hospital, Gadag-Betgeri, district Dharwar.
3. Evangeline Booth Hospital, Ahmednagar, district Ahmednagar.
4. Puntamba Mission Dispensary, district Ahmednagar.
5. Mission Hospital (St. Luke's Hospital), Vengurla, district Ratnagiri.
6. Mission Hospital, Dahanu Road, Dahanu, district Thana.
7. Canada Mission Hospital, Nasik, district Nasik.
8. The American Marathi Mission Hospital (N. M. Wadia Hospital), Wai, district Satara.
9. The American Marathi Mission Friendship Centre, Satara, district Satara.
10. Ramabai Mukti Mission Hospital, Kedgaon, district Poona.
11. Seventh Day Adventist Surat Hospital, Surat, district Surat.
12. Brethren Mission Hospital, Bulsar, district Surat,
13. Navsari Medical and Surgical Hall, district Surat.
14. Suvarta Memorial Hospital, M. P. Mission, Dhulia, district West Khandesh.
15. Charitable Dispensary, Bavla, taluka Dholka, district Ahmedabad.
16. Karnatak Health Institute, Hukeri Road, district Belgaum.
17. The American Mission Hospital, Miraj.
18. Sir William Wanless Tuberculosis Sanatorium, Miraj.
19. The Seandinavian Alliance Mission Dispensary, Chinchpada, West Khandesh district.

G. N., G. D., No. 4624/33, dated 29th May 1943 (B. G., Pt. IV-B, p. 240). S. 32

In exercise of the powers conferred by the proviso to section 32 of the Bombay Medical Practitioners' Act, 1938 (Bom. XXVI of 1938), the Government of Bombay is pleased to direct that the provisions of section 32 of the said Act shall not apply to such persons who as Government scholarship holders, were deputed by the Government of Bombay to receive training at the Ayurvedic and Unani Tibbi College, Delhi, and have passed either the Fazil-i-Tib-o-Jarahat or the Kamil-i-Tib-o-Jarahat examination of the said College.

s. 32 **G. N., G. D., No. 3334/33, dated 19th February 1944 (B. G., Pt. IV-B, p. 76).**

In exercise of the powers conferred by the proviso to section 32 of the Bombay Medical Practitioners' Act, 1938 (Bom. XXVI of 1938), the Government of Bombay is pleased to direct that the provisions of section 32 of the said Act, shall not apply to the persons who—

(*a*) have passed, before the 4th November 1941, an examination held by an institution in the Province of Bombay, which, in the opinion of the Board of Indian Systems of Medicine, Bombay, is sufficient to qualify them to practise as practitioners; and

(*b*) have applied, between the 4th November 1941 and the 1st October 1943, to the Registrar of the said Board under the proviso to sub-section (*2*) of section 16 of the said Act for having their names entered in the Register maintained under section 15 of the said Act; and

(*c*) are considered by the said Board to be fit to practise as practitioners.

s. 32 **G. N., H. & L. G. D., No. 3339/33, dated 21st May 1948 (B. G., Pt. IV-B, p. 278).**

In exercise of the powers conferred by the proviso to section 32 of the Bombay Medical Practitioners' Act, 1938 (Bom. XXVI of 1938), the Government of Bombay is pleased to direct that the provisions of the said section 32 shall not apply to medical practitioners—

(i) who are certified by the Refugee Officer, Bombay, to be refugees from Pakistan; and

(ii) who—

(*a*) have passed any of the examinations specified in column 1 in Part A of the Schedule held by the institution specified against it in column 2 thereof, or

(*b*) hold any of the diplomas specified iu column 1 of Part B of the said Schedule conferred by the institution specified against it in column 2 thereof.

SCHEDULE.

PART A.

Examination.	Examining body.	Place.
Ayurvedacharya ..	All-India Ayurved Mahamandal Vidyapeeth.	Lahore.
Ayurvedacharya (Benares) ..	Benares Hindu University	Benares.
Ayurvedacharya (Jaipur) ..	Maharaja Sanskrit College	Jaipur.
Ayurvedacharya Dhanwantari.	Ayurvedic and Unani Tibbi College ..	Delhi.
Ayurvedalankar	Gurukula University	Kangri.
Ayurvedbhishak	All-India Ayurved Mahamandal Vidyapeeth.	Lahore.
Ayurvedbhishak (Jaipur) ..	Maharaja Sanskrit College	Jaipur.
Ayurvedbhishagvisharad ..	Shreeram Ayurved Mahavidyalaya ..	Malwan.
Ayurvedchikitsak	Ayurved Prasarak Mandali	Satara.
Ayurvedchoodamani ..	Prem Vidya Peeth	Tungabhadra.

Examination.	Examining body.	Place.
Ayurvedmadhyama ..	Shravan Mas Dakshina Pariksha Samiti ..	Baroda.
Ayurvedopadhyay ..	Maharaja Sanskrit College	Jaipur.
Ayurvedratna	Shravan Mas Dakshina Pariksha Samiti ..	Baroda.
Ayurvedshastri	Maharaja Sanskrit College	Jaipur.
Ayurvedshastri A.M.B. ..	Govindsundari Ayurvedic College ..	Calcutta.
Ayurvedshiromani ..	Prem Vidya Peeth	Tungabhadra.
Ayurvedshiromani (Vrindavan)	Gurukul University	Vrindavan.
Ayurvedteerth	Ayurved Vidyalaya Sanstha	Ahmednagar.
Ayurveduttama	Shravan Mas Dakshina Pariksha Samiti ..	Baroda.
Ayurvedvidvan L.A.M.S. ..	Government Ayurvedic and Unani College ...	Mysore.
Ayurvedvisharad	All-India Ayurved Mahamandal Vidyapeeth	Lahore.
Ayurvedvisharad (Baroda) ..	Rajkiya Sanskrit Mahavidyalaya ..	Baroda.
Ayurvedvisharad (Satara) ..	Ayurved Prasarak Mandali	Satara.
Ayurvidyaparangat	Tilak Maharashtra Vidyapeeth	Poona.
Ayurvidyavisharad ..	Tilak Maharashtra Vidyapeeth	Poona.
Bhishak L.P.A.C. ..	Prabhuram Ayurvedic College	Bombay.
Bhishagacharya	Maharaja Sanskrit College	Jaipur.
Bhishagacharya M.A.M.S. ..	J. B. Astang Ayurvedic College ..	Calcutta.
Bhishagacharya Dhanwantari ..	Ayurvedic and Unani Tibbi College ..	Delhi.
Bhishagindu	Prem Vidya Peeth	Tungabhadra.
Bhishagratna L.A.M.S. ..	Jaminibhushan Astanga Ayurved Vidyalaya	Calcutta.
Bhishagvar	Karnatak Ayurved Vidyapeeth	Belgaum.
Bhishagvar (Bijapur) ..	Arya Vaidyak Shala	Bijapur.
Bhishagvar (Jaipur) ..	Maharaja Sanskrit College	Jaipur.
Bhishagvar A.A.M.S. ..	Prabhuram Ayurvedic College	Bombay.
Bhishagvar G.P.A.C. ..	Prabhuram Ayurvedic College	Bombay.
Grihitayurved	Ayurved Vidyalaya Sanstha	Ahmednagar.
Grihitayurvedshastra D.A.M.	U. P. Ayurved Mahavidyalaya	Patan.
Grihitayurvedshastra L.A.M. ..	U. P. Ayurved Mahavidyalaya	Patan.
Vaidya	All-India Ayurved Mahamandal Vidyapeeth.	Lahore.
Vaidyabhanu	Prem Vidya Peeth	Tungabhadra.
Vaidyabhushan	Shravan Mas Dakshina Pariksha Samiti ..	Baroda.
Vaidyaguru	Prem Vidya Peeth, Tungabhadra ..	Tungabhadra.
Vaidyakalanidhi	Government Ayurvedic College	Trivendram.
Vaidyaratna	Shravan Mas Dakshina Pariksha Samiti ..	Baroda.

Examination.	Examining body.	Place.
Vaidyashastri	Maharaja Sanskrit College	Jaipur.
Vaidyavachaspati	Dayanand Ayurvedic College	Lahore.
Vaidyavar L.P.A.C.	Prabhuram Ayurvedic College	Bombay.
Vaidyavidyavisharad	Dhootpapeshwar Ayurved Mahavidyalaya	Panvel.
D.I.M.	Rishikula Ayurved College	Hardwar.
L.I.M.	Board of Examination in Indian Medicine	Madras.
M.A.M.S.	Vishwanath Ayurved Mahavidyalaya	Calcutta.

PART B.

Name of Diploma.	Name of Institution.	Place.
Fazile-tib-o-Jarahat, Kamile-tib-o-Jarahat and Hakim Kamil	Ayurvedic and Unani Tibbi College	Delhi.
Hakim Fazil	Tibbia Wahajia College	Lucknow.
Sanad	Asifia Tibbia College	Bhopal.
Akmalul Hukma and Fazil-ul-Atibba	Jamia Tibbia	Delhi.
Sanad	Madarsa Tibbia	Delhi.
Sanad	Takmilut-tib College	Lucknow.
Sanad	Mumba-ut-tib College	Lucknow.
Motmadut-tib	Unani Medical School	Allahabad.
D.I.M.S.	Muslim University	Aligarh.
Tubib-i-Akmal and Hazatul-Hukma	Bhupendra Tibbia College	Patiala.
Hakim Haziq	Tibbia College	Lahore.

S. 32 **G. N., H. & L. G. D., No. 3334/33, dated 29th July 1948 (B. G., Pt. IV-B, p. 447).**

In exercise of the powers conferred by the proviso to section 32 of the Bombay Medical Practitioners' Act, 1938 (Bom. XXVI of 1938), the Government of Bombay is pleased to direct that the provisions of the said section shall not apply to persons who have obtained the following diplomas before 23rd January 1948 :—

1. Diploma of Ayurvedacharya either with "Medicine and Surgery" or with "Modern Medicine and Surgery" granted by the Benares Hindu University, Benares.

2. Diploma of Fazil-i-Tib-o-Jarahat and Kamil-i-Tib-o-Jarahat granted by the Ayurvedic and Unani Tibbi College, Delhi.

G. N., H. & L. G. D., No. 3150/33, dated 28th September 1948 (B. G., Pt. IV-B, p. 919). **S. 32**

In exercise of the powers conferred by section 32 of the Bombay Medical Practitioners' Act, 1938 (Bom. XXVI of 1938), the Government of Bombay is pleased to direct that the provisions of the said section shall not apply to persons who hold the M.D. degree (Paris) provided that they are citizens of India.

G. N., H. & L. G. D., No. 3150/33, dated 11th November 1948 (B. G., Pt. IV-B, p. 1289). **S. 32**

In exercise of the powers conferred by section 32 of the Bombay Medical Practitioners' Act, 1938 (Bom. XXVI of 1938), the Government of Bombay is pleased to direct that the provisions of the said section shall not apply to persons who hold the degree of M.D. (Bom.) provided that they are citizens of India.

G. N., G. D., No. 3334/33, dated 28th July 1943 (B. G., Pt. IV-B, p. 298). **S. 38 (2)**

In exercise of the powers conferred by sub-section (*2*) of section 38 of the Bombay Medical Practitioners' Act, 1938 (Bom. XXVI of 1938), the Government of Bombay is pleased to empower the officers specified in column (1) of the Schedule hereto appended, to make complaints in writing of any offence under the said Act, within the areas respectively specified in column (2) of the said Schedule.

Schedule.

Officers.	Areas.
(1)	(2)
(1) The Personal Assistant to the Surgeon General with the Government of Bombay.	City of Bombay.
(2) The Civil Surgeon in the district ...	All districts except the Surat, Sholapur and Bijapur districts
(3) The District Health Officer ...	Surat, Sholapur and Bijapur districts.

THE BOMBAY GAS SUPPLY ACT, 1939 (BOM. IX OF 1939).

G. N., P. W. D., No. 2186/36-III, dated 6th November 1940 (B. G., Pt. IV-B, p. 1148).

S. 11

Bombay Gas Supply Rules, 1940.

In exercise of the powers conferred by section 11 of the Bombay Gas Supply Act, 1939 (Bom. IX of 1939), the Government of Bombay is pleased to make the following rules :—

1. *Short title.*—These rules may be called the Bombay Gas Supply Rules, 1940.

2. *Definitions.*—In these rules unless there is anything repugnant in the subject or context,—

(1) "Form" means a form appended to these rules.

(2) "Government" means the Government of Bombay.

(3) Words and expressions used in the Act and not defined in these rules shall have the meanings assigned to them in the Act.

3. *Preparation and rendering of accounts.*—(1) The Company shall each year prepare a statement of accounts of its undertaking, for a period of 12 months, made up to the thirty-first day of December, or up to the thirty-first day of March or up to such other date as Government may from time to time fix in this behalf.

(2) The Company shall render to such officer as Government may appoint in this behalf such statement within six months from the date up to which it is made :

Provided that Government may, if it is satisfied that there is sufficient reason for so doing, extend the time for rendering the same.

(3) The Company shall, if Government so directs, render such statement in duplicate.

4. *Form of accounts.*—The statement of accounts rendered under rule 3 shall so far as practicable be made up in the forms appended to these rules or in such other forms as Government may by a special or general order direct. The accounts may at the option of the Company be made up either in Indian or in British Sterling currency.

5. *Maximum price at which copies of statements of accounts to be sold.*—The maximum price at which copies of statements of accounts shall be sold by the Company shall be rupees five per copy.

MODEL FORM OF ACCOUNT PRESCRIBED UNDER THE BOMBAY GAS SUPPLY ACT, 1939.

(*See* Section 3 and Rule 4.)

The Company.

No. I.

For the year ending _____

Statement of Share Capital appropriated for the purposes of the undertaking authorised at the end of the year.

Description of Capital.	Authorised by.	Number of Shares issued.	Nominal amount of Share.	Called up per Share.	Total paid up.	Issued not paid up.	Remaining unissued.	Total amount authorised.

No. II.

For the year ending _____

Statement of Loan Capital appropriated for the purposes of the undertaking authorised at the end of the year.

Description of Loan.	Amounts borrowed.				Remaining borrowing powers.	Total amount of borrowing powers.
	At per cent.	At per cent.	At per cent.	Total.		

Total Share Capital Paid-up—*See* No. I ...

Total Loan Capital Borrowed—*See* No. II ...

Total Capital Received ...

No. III.—Capital Account.

For the year ending _____

Dr.

———	Expenditure up to end of previous year.	Expended during the year.	Depreciation written off during the year.	Total expenditure to
1. To Preliminary expenses (to be specified)				
2. To Lands including law charges incidental to acquisition.				
3. To Buildings				
4. To Plant				
5. To Gas Holders				
6. To Mains				
7. To Service connections ..				
8. To Meters and fees for certifying under the Act.				
9. To Special items (to be specified.)				
Total expenditure ..				
To Balance of Capital Account ..				

Cr.

	Receipts up to end of previous year.	Received during the year.	Total receipts to
1. By Ordinary shares of			
2. By Preference shares of			
3. By Debenture Stock			
4. By Mortgages and bonds			
5. By Amounts received in anticipation of calls ..			
6. By Premiums received in respect of shares issued in years 1911 and 1912.			
7. By Other receipts (to be specified)			
Total receipts ..			
By Balance of Capital Account ..			

No. IV.—Revenue Account.

For the year ending _____

To Manufacture of Gas—		By Sale of Gas—	
Coal Coke and Oil including freight, dues and unloading (*see* Account No. IX) ..		Private Gas Rental	
Salaries of Engineers and Officers at Works ..		Public Lighting under Contracts ..	
Wages (carbonizing)		*Less*—Cost of maintenance ..	
Purification, including for Labour		(Gas sold cubic ft.)	
Repairs and Maintenance of Works and Plant, Materials and Labour		„ Rental—	
		Meters	
„ Distribution of Gas—		Prepayment Meters	
Salaries and Wages of Officers (including Rental Clerks).—		Stoves and Refrigerators ..	
Repair, Maintenance and Renewal of Mains and Services, Material and Labour.		„ Residual Products—	
Repair and Renewal of Meters, Stoves and Refrigerators.		Coke (*Less* for Labour)	
Fittings		Tar	
		„ Transfer Fees	
„ Rent, Rates and Taxes (Income-tax not to be included) ..		„ Rents Receivable	
„ Management—			
Directors' Allowance (including Schedule E—Income-tax)			
Company's Auditors ..			
Salaries of Secretary, Accountant and Clerks ..			
Collector's Salaries and Commission			
Sattionery and Printing ..			
General Charges			
„ Gratuities and Allowances ..			
„ Bad Debts			
„ Law Charges			
„ Superannuations			
„ Passages			
„ Depreciation			
„ Provident Fund			
„ Workmen's Compensation Insurance			
„ Gratuity Account			
„ Balance carried to Net Revenue Account ..			

No. V.—Net Revenue Account.

For the year ending——————————

Dr.	*Cr.*
1. To Interest on debentures accrued due to date.	1. By Balance from last account ..
2. To Interest on mortgages and bonds accrued due to date.	*Less* dividend paid ..
3. To Interest on temporary loans accrued due to date.	2. By Balance brought from Revenue Account (No. IV). ..
4. To Dividend on preference stock ..	3. By Interest on money at deposit ..
5. To Income-tax paid ..	4. By Interest on Investments ..
6. To Interest on Provident Fund ..	
7. To Exchange	
8. To Depreciation of Investments ..	
9. To Interest on Reserve Fund ..	
10. To Interest on Renewal Fund ..	
11. To Balance available *less* dividend on Ordinary Stocks or shares ..	

No. VI.—Reserve Fund Account.

For the year ending——————————

Dr.	*Cr.*
1. Amount paid out (items to be specified) ..	1. By Balance brought from last account.
2. Amount of balance to next account ..	2. By Amount brought from Net Revenue Account.
	3. By Interest on amount in business of Company.

No. VII.—Depreciation Fund Account

For the year ending——————————

Dr.

To Balance		1. By Balance from last account ..	
		2. By Interest on investments ..	
		3. By Amount brought from Revenue Account.	
		(Description of investments to be specified.	

No. VII-A.—Renewal and Contingency Fund.

To Balance		By Balance from last account ..	
		,, Interest on amount used in Company's business.	
		,, Amount brought from Revenue Account	

No. VIII.—Statement of Coals.

For the year ending——————————

Description of coal.	In Store on	Received during the year.	Carbonized during the year.	Used and sold during the year.	In Store on
	Tons.	Tons.	Tons.	Tons.	Tons.
Common					

No. IX.—Statement of Residual Products.

——	In Store on	Made during the year.	Used during the year.	Sold during the year.	In Store on
Coke ... ... *Tons.*					
Breeze ... ... *Tons.*					
Ash Pan Breeze ... ... *Tons.*					
Tar ... ... *Gallons.*					

No. X.—General Balance Sheet.

For the year ending——————————

Liabilities.	Assets.
1. Capital account : Amount received as per Account No. III.	1. Capital account : Amount expended for works as per Account No. III.
2. Sundry creditors due on construction of plant and machinery, coal and coke, stores, etc.	2. Stores on hand .. ..
3. Sundry creditors on open accounts ..	3. Sundry debtors .. ..
4. Net revenue account : Balance at credit thereof.	4. Preliminary expenses awaiting adjustment.
5. Reserve fund account : Balance at credit thereof.	5. Securities as held (cost price) *less* depreciation.
6. Renewal and Contingency Fund ..	6. Special items (to be specified) ..
7. Depreciation Fund account ..	7. Cash at bankers .. .. }
8. Special items (to be specified) ..	8. Cash on hand .. .. }
Provident Fund ..	
Dividends Outstanding ..	
Total ..	Total ..

No. XI.—Statement of Gas manufactured, sold, etc.

Total manufacture of gas in 1,000 cft.	1,000 cft. of gas.				
	Public lamps.	By special contract.	Consumers by meter for lighting purposes.	Consumers by meter for heating purposes.	Total.
1	2	3	4	5	6

1,000 cft. used on works.	Total 1,000 cft. accounted for.	1,000 cft. not accounted for.	Number of public lamps connected.	Total consumers connected.	Maximum capacity of Plant per 24 hrs. 1,000 cft.	Maximum Demand per 24 hrs. 1,000 cft.
7	8	9	10	11	12	13

THE BOMBAY LIFTS ACT, 1939 (BOM. X OF 1939).

G. N., P. W. D., No. 8225/27-II, dated 8th April 1940 (B. G., Pt. IV-B, p. 443). **S. 2 (2)**

In exercise of the powers conferred by sub-section (*2*) of section 2 of the Bombay Lifts Act, 1939 (Bom X of 1939), the Government of Bombay is pleased to direct that the said Act shall come into force on the first day of June 1940.

G. N., P. W. D., No. 8225/27-III, dated 8th April 1940 (B. G., Pt. IV-B, p. 443). **S. 3 (a)**

In exercise of the powers conferred by clause (*a*) of section 3 of the Bombay Lifts Act, 1939 (Bom. X of 1939), the Government of Bombay is pleased to appoint the Electric Inspector, Bombay State, to be the Inspector of Lifts.

G. N., P. W. D., No. 8225/27-IV, dated 8th April 1940 (B. G., Pt. IV-B, p. 443). **SS. 4, 5 (1) & (3), 6 (2), 8 (1), 9 (1) and 11.**

The Government of Bombay is pleased to authorise the Inspector of Lifts for the purposes of section 4, sub-sections (*1*) and (3) of section 5, sub-section (*2*) of section 6 read with sub-section (*3*) of section 5, sub-section (*1*) of section 8, sub-section (*1*) of section 9 and section 11 of the Bombay Lifts Act, 1939 (Bom. X of 1939).

G. N., P. W. D., No. 8225/27, dated 6th September 1940 (B. G., Pt. IV-B, p. 905). **SS. 8 (1) & 11**

The Government of Bombay is pleased to authorise the Deputy Engineer for the Inspection of Lifts in the Electrical Circle for the purposes of sub-section (*1*) of section 8 and section 11 of the Bombay Lifts Act, 1939 (Bom. X of 1939).

G. N., P. W. D., No. 8225/27-V, dated 8th April 1940 (B. G., Pt. IV-B, p. 443). **S. 10**

In exercise of the powers conferred by section 10 of the Bombay Lifts Act, 1939 (Bom. X of 1939), the Government of Bombay is pleased to delegate the powers conferred on it under sub-section (*10*) of section 4, sub-section (*3*) of section 5, sub-section (*2*) of section 6 read with sub-section (*3*) of section 5, and sub-section (*2*) of section 8 of the said Act to the Electrical Engineer to Government, Bombay.

G. N., P. W. D., No. 8225/27-VI, dated 8th April 1940 (B. G., Pt. IV-B, p. 444). **S. 12 Bombay Lifts Rules, 1940.**

Amended by G. N., P. W. D., No. 4525/36, dated 14th June 1940.

In exercise of the powers conferred by section 12 of the Bombay Lifts Act, 1939 (Bom. X of 1939), the Government of Bombay is pleased to make the following rules to carry out the purposes of the said Act, namely :—

1. *Short title.*—These rules may be called the Bombay Lifts Rules, 1940.

2. *Definitions.*—In these rules,

(1) "Act" means the Bombay Lifts Act, 1939.

(2) "Form" means a form appended to these rules.

(3) "Schedule" means the Schedule annexed to these rules.

3. *Permission to erect a lift.*—(1) Every owner of a place intending to install a lift in such place shall make an application in Form A to the Inspector of Lifts.

(2) On receipt of such application the Inspector of Lifts shall, after making such inquiry and requiring the applicant to furnish such information as he may deem necessary, forward the application with his remarks to the Electrical Engineer to Government, Bombay, who may thereupon either grant or refuse the permission.

4. *License to use a lift.*—(1) Every owner of a place who is permitted to install a lift shall within one month after the completion of the erection of such lift deliver or send or cause to be delivered or sent to the Inspector of Lifts notice in writing of such completion and shall make an application to him for a license for working the lift. The notice and the application shall be in Form B.

(2) On receipt of such application, the Inspector of Lifts shall, after making such inquiry as he may deem necessary, forward the application with his remarks to the Electrical Engineer to Government, Bombay , who may thereupon either grant or refuse the license. The license shall be in Form C.

5. *License for existing lifts.*—(1) Every owner of a place in which a lift has been installed before the date of the coming into force of the Act, shall within two months from such date apply to the Inspector of Lifts for a license for the working of such lift. The application for the license shall be made in Form D.

(2) The provisions of sub-rule (2) of rule 4 shall, so far as may be, apply to such application.

6. *License for working of lifts not to be granted unless requirements laid down in Schedule are complied with.*—No license for the working of any lift shall be granted unless the requirements laid down in the Schedule have been complied with in respect of such lift and its installation :

Provided that in the case of a lift installed before the commencement of the Act, a license for its working may be granted notwithstanding the fact that all the aforesaid requirements have not been complied with in respect of such lift and its installation, if the Electrical Engineer, Bombay, is satisfied that no accident resulting in any injury to any person is likely to occur in the operation of such lift. In such case a note of the requirements which are not complied with shall be made in the license.

7. *Terms on which lifts are to be worked.*—Every lift shall be worked subject to the following terms :—

(1) The lift and its installation shall be maintained so that the requirements laid down in the Schedule are always complied with :

Provided that in the case of a lift installed before the commencement of the Act the requirements, a note of which is made on the license under Rule 6, may not be complied with.

(2) The Lift Operators shall be not less than 18 years of age and shall be persons who have been trained in the correct operation of the lifts.

8. *Right to enter any building and order for repairs to lifts in an unsafe condition.*—The notice to be given under sub-section (*1*) of section 8 of the Act shall be in Form E and the order to be issued under sub-section (*2*) of section 8 of the Act shall be in Form F.

9. *Report of accidents.*—Notice of any accident occurring in the operation of any lift resulting in injury to any person required to be given under sub-section (*1*) of section 9 of the Act shall be in Form G. Such notice shall be given within 24 hours of the occurrence of the accident.

10. *Unused lifts.*—When a lift installed at any place ceases to be used as such, the owner shall either remove it or maintain it in a safe mechanical condition after disconnecting it entirely from the electric supply. All gates and doors shall be efficiently locked so as to prevent the entry of unauthorised persons to the lift well.

SCHEDULE.

1. *Liftway.*—Every liftway shall be efficiently protected by a substantial end-closure fitted with gates or doors so as to prevent, when the gates or doors are shut, any person falling down the liftway or coming into contact with any moving part of the hoist or lift.

2. *Liftway gates and doors.*—All gates and doors of a liftway shall be so interlocked as to ensure that the gates and doors at any landing cannot be opened except when the lift cage is at such landing, and that the lift cage cannot be moved away from such landing until all the gates and doors at such landing are closed.

3. *Lift to be constructed so as to prevent persons in it from being trapped.*—Every lift and its enclosure shall be so constructed as to prevent any part of any person carried in the hoist or lift being trapped between the counterbalance weight and any other moving part of the hoist or lift.

4. *Load to be marked in the lift cage.*—There shall be marked conspiciously in every lift cage the maximum number of passengers (excluding the lift operator) which it can safely carry. No passengers exceeding this number shall be carried in the lift cage.

5. *Automatic devices for cutting off power to be provided.*—Efficient automatic devices in each lift shall be provided and maintained in each lift whereby all power shall be cut off from the motor before the car or balance weight lands on the buffers.

6. *Lift wells.*—(*a*) All lift wells intended for the reception of lifts shall be exclusively reserved for that purpose and shall not be used for any other purpose.

(*b*) The internal surface of lift wells, so far as is practicable, shall be kept flush. Any projections extending inwards from the general surface of the enclosure, at or near openings or landings, shall be bevelled by means of hard wood or metal plates to an angle of not less than 60 degrees from the horizontal, or by means of cement rendering or other fire-resisting materials.

(*c*) Lift wells, together with the whole of the contained equipment and apparatus, shall be rendered fire-resisting to the greatest possible extent.

7. *Lift way enclosures.*—(*a*) Where fire-resisting construction cannot be provided, the lift way *enclosure* shall be carried to a height of not less than seven feet, or such greater height as may be recommended by the Inspector of Lifts.

(*b*) All landing gates shall be of a close picket type and no opening exceeding 2¼ inches in width shall be permitted between pickets or verticals when the gate is fully extended or closed up to a height of at least one foot from the landing level.

(*c*) Where wire grille or similar construction is used, the mesh or opening shall be not greater than $1\frac{1}{4}$ inches and the lift way *enclosure* shall be of sufficient strength to resist accidental impacts from users of the staircase or adjoining floors.

(*d*) Where the clearance between the lift way *enclosure*, if of an open type, and any moving or moveable part of the lift equipment or apparatus is less than two inches, the openings in the enclosure shall be further protected by nettings of square mesh not greater than one-half inch and of wire not smaller than 20 S. W. G.

(*e*) The landing doors, in all cases where lifts are installed in wells having solid walls, shall be fitted with fire-resisting wired glass vision panels of limited area.

(*f*) No automatic fire door or shutter which operates by means of a fusible link or otherwise, due to the action of heat, shall be allowed in any landing, opening or the lift way *enclosure* of any lift, if such opening gives access to any exit from the building.

(*g*) No counterweight shall be allowed to travel in any lift well or part of any lift well other than to which it belongs.

(*h*) In the case of a lift well which is common to more than one lift and where counterweights are in juxtaposition to *cars* other than those to which they are attached, or to the counterweights of such other *lift cars*, such counterweights shall be guarded carefully and adequately, in such a manner as will obviate the risk of accidents to persons working in the lift well.

8. *Lift pits.*—(*a*) Between the lower limit of the travel of the lift cage and the bottom of the lift way and between the upper limit of the travel of the lift cage and the top of the lift way a space of not less than three feet shall be provided.

(*b*) Pits shall be soundly constructed and maintained in a dry and clean condition. Where necessary provision shall be made for permanent drainage.

9. *Suspension ropes.*—(*a*) Chain shall not be used for the suspension of a lift. Not less than three independent suspension ropes shall be used for *car* or counterweight of any lift with traction drive, and not less than two independent ropes with drum drive.

(*b*) All ropes anchored to a winding drum shall have not less than one complete turn of the ropes on the winding drum when the car or counterweight has reached the extreme limit of its travel and clearance.

(*c*) The factor of safety of the combined suspension ropes shall be not less than 12 based on a static contract load, plus the weight of the *car* and accessories.

(*d*) No car or counterweight rope shall be repaired or lengthened by splicing.

(*e*) The winding drum end of *car* and counterweight ropes shall be secured by clamps on the inside of the drum.

(*f*) The car and counterweight ends of the suspension ropes shall be fastened by spliced return loops, clipped return loops or individual tapered babitted sockets. Loops shall not bear directly on their fixings, but shall be lined with proper thimbless eyes or equal protection. In all cases the fastenings shall be capable of sustaining a load of not less than 80 per cent. of the ultimate strength of the undisturbed rope.

(*g*) Means shall be provided to equalise the load on the individual suspension ropes.

(*h*) The materials, quality, construction, and fixing of ropes shall, so far as is applicable, conform to the appropriate British Standard Specification.

(*i*) Tensioning devices for compensation ropes, governor ropes and the like, shall be protected against damage due to falling objects.

10. *Guides.*—(*a*) Car and counterweight guides shall be of steel in all cases except where the nature of the processes carried on in the building renders these unsuitable due to acid fumes or similar causes.

(*b*) For all speeds in excess of 200 feet per minute, TEE Section Guides only shall be used.

(*c*) Guides shall be continuous throughout the entire length of the lift well, and shall be provided with adequate iron or steel brackets or equivalent fixings of such design and spacing that the guides shall not deflect more than ¼th inch under normal operation.

(*d*) Guides shall be arranged to withstand the action of the safety gear when stopping a counterweight or fully loaded *car*.

11. *Lift Cages.*—(*a*) Lift cages shall be enclosed on all sides by means of the cage body, gates or doors, and such enclosure shall be at least 6 feet 6 inches in height. A roof, solid or perforated, capable of supporting the weight of a man weighing 150 lbs. shall be provided. Perforation shall be sufficiently close in mesh or casing to provide reasonable protection against falling articles to any person travelling in the cage. The cage floor shall be of a smooth non-slip surface.

(*b*) The cage of every automatically operated lift, in which a passenger or an attendant is at any time carried, shall be provided with an emergency stopping, device operated by a push button, which shall be clerly marked, and also an alarm signal operated by push button shall be provided inide the cage and shall be clearly marked. The alarm shall be clearly audible outside the *lift way*, in order to obtain assistance in case of a break-down or failure between the floors.

(*c*) Every lift installation controlled by an operator shall be operated by a removable handle or key which shall remain at all times in the possession of the operator. The handle or key shall automatically return to the off position when pressure is removed. Landing gates of such lift installations shall be opened only by a removable key which shall remain in the possession of the operator.

(*d*) Each lift cage shall be fitted with a light, and such light shall be left burning during the whole time the lift is available for use.

(*e*) Lift cages shall be fitted with an emergency exist, where practicable, which shall be fitted into the top of the cage in cases where one lift only operates in the well.

(*f*) Top exists shall open outward and shall clear all gear or equipment mounted on the top of the cage.

(*g*) A cage door or gate shall be placed at each entrance of lift cages. Such doors or gates shall, when closed, guard the full opening, and each door or gate shall be equipped with an electric contact which shall prevent the movement of the car, unless the door or gate is properly closed.

(*h*) Where *cage levelling devices* are used, aprons shall be fitted to the cage floor to ensure that no space is permitted between the threshold and the landing whilst the cage is being levelled to a floor.

Note.—See exemptions under paragraph xii of "Locking Devices for landing Gates and Doors".

12. *Inspection and maintenance of lifts.*—Every owner of a lift shall enter into a contract with the makers of the lift or their agents, for the satisfactory maintenance, including cleaning, oiling, adjusting and repairing of the lift. This clause shall not apply where in the opinion of the Electric Inspector the owner of the lift has suitable means for the satisfactory maintenance of the lift, including cleaning, oiling, adjusting and repairing of the lift.

13. *Locking devices for landing gates, doors and shutters.*—(*a*) Every landing gate, door or shutter shall be fitted with a locking device which shall comply with the appropriate requirements given hereafter;

(*b*) The systems of landing gate, door or shutter interlocks, shall be of the following three kinds, viz. :—

(*i*) The system in which the landing gate, door or shutter is locked by means of a device comprising a lock box, which is fitted to the frame of the gate, or shutter. Such devices are commonly known as electrical and mechanical interlocks.

(*ii*) The system in which the lift is operated only from the car and provided with solid sliding landing door which are equipped with a door closer and are locked with a mechanical contrivance actuated by means of levers operated from the car side only.

Note.—The door shall be considered closed and the car may be moved away from the landings when the door is within 4 inches of the jamb, or in the case of centre opening doors, when these are within 4 inches of each other, provided an approved attachment is fitted which will effectively prevent the doors from being re-opened after they have reached a limit of 4 inches, and provided also that the door closer is of such a type as will eventually carry the door or doors to, and, lock it or them in, the closed position.

(*iii*) The system in which the type of control does not require the presence of an attendant in the car and in which the landing doors are of the solid, sliding type equipped with a door closer and locked with a mechanical contrivance actuated by means of levers.

(*c*) All locking systems shall comply with the following requirements :—

(*i*) It shall not be possible to open the landing gate, door or shutter from the landing side until the lift cage is within that particular landing zone. (Provision may be made for the opening of the gate, door or shutter in case of emergency by means of a special key).

(*ii*) The car cannot be started or kept in motion between landing zones unless all the landing gates, doors or shutters are closed.

Explanation.—The landing zone shall mean the space between positions not more than 15 inches above or below the landing level.

(*iii*) The electrical and mechanical parts of all looking devices shall be of substantial design and construction. The removal of any inspection cover or covers shall not affect the operation of a device. All locking devices shall be fixed securely to the enclosure by suitable means.

(*iv*) The locking devices for landing gates, doors or shutters shall be so designed that the lock contact is not closed until the gate, door or shutter is closed.

(*v*) Any spring used in the locking device shall be in compression and properly supported.

(*vi*) Contacts shall be of solid type, pivoted or hinged and of sturdy construction.

(*vii*) The insulation resistance of the electrical equipment of the locking device shall be capable of withstanding for one minute a pressure of 2,000 volts, alternating current.

(*viii*) The design shall be such that reasonable wear between working parts does not permit of interference with the operation of the lift by movement of the lock handles.

(*ix*) The conduit carrying the conductors to the lock or contact boxes shall be fixed securely to the boxes and shall maintain electrical and mechanical continuity.

(*x*) The levers operating the mechanical part of the locking device shall be protected from the interference from the landing side of the lift way enclosure.

(*xi*) Provision shall be made on lifts operated from the cage and landings to prevent the opening of any landing gate, door, or shutter when the car is passing that zone in response to a call from another landing.

(*xii*) The locking device shall not prevent operation of the lift whilst the emergency release push is in temporary use, or when the car is being moved under the control of the levelling device.

(*xiii*) Lift cages having one or more entrances, any of which opens into a space in any portion of the travel which is in excess of 5 inches, shall have the gate or door to that side of the car protected by mechanical locking device with the electrical interlock.

14. *Motor rooms and overhead structures.*—(*a*) The lift machine, controller and all other apparatus and equipment of a lift installation, excepting such apparatus and equipment as functions in the lift well or other position, shall be placed in the motor room.

(*b*) The motor generators controlling the speed of multi-voltage or variable voltage machines, secondary sheaves, pulleys, governors, floor selecting equipment and the like, may be placed in a place other than the motor room, but such position shall be adequately lighted, ventilated and rendered fireproof and weatherproof.

(*c*) The motor room floor shall be designed and constructed to carry safely at any point the heaviest portion or unit of equipment, both during erection and for maintenance purposes.

(*d*) The motor room shall be so designed as to allow of reasonable access to all parts of the equipment, and provision shall be made to allow the removal and replacement of the various units.

(*e*) The height of the motor room shall be sufficient to allow any portion of the equipment to be accessible and removeable for repairs and replacement and in no case shall be less than 6 feet 6 inches clear.

(*f*) The motor room shall be soundly constructed and shall be weatherproof. They shall be ventilated effectively to prevent undue rise in temperature in the room. Every motor room shall be provided with an approved form of artificial lighting, and wherever available, electric lighting shall be provided in the form of one fixed fitting and one plug socket to each two or less machines.

(*g*) The motor room shall be provided with easy and safe access and doors shall be of sufficient opening to allow for the removal and replacement of parts of the

machinery therein. Where the floor level of a motor room is above or below that of the roof or adjacent floor a permanent stair or ladder shall be provided.

(*h*) The motor room shall be kept closed, except to those who are concerned with the operation and maintenance of the machinery or equipment. When the electrical pressure used is above 250 volts D. C. or 125 volts A. C., a danger notice shall be displayed permanently on the outside of the door and on or near the machinery.

(*i*) The motor room shall not be used as a store room or for any purpose other than for housing the machinery connected with the lift installation.

(*j*) The motor room shall be provided with an insulated portable hand lamp with workshop flexible for examining the machinery.

15. *Overhead pulleys.*—The place in which overhead pulleys are fixed shall be easily accessible for maintenance and repair purposes, shall be lighted adequately and shall be provided with a floor spacious enough to enable maintenance and repairs to be carried out in safety. In cases where the floor does not extend to the full area of the lift well, a guard rail or its equivalent shall be provided.

16. *Emergency Safety Devices.*—(*a*) Every lift suspended by wire ropes shall be provided with a *car safety gear*, attached to the lift cage frame and perferably placed beneath the car. The safety gear shall be capable of stopping and sustaining the lift cage with full contract load in the car.

(*b*) Every lift having a travel exceeding 18 feet shall be equipped with an overspeed governor device which will operate to apply the safety gear in the event of the speed of the lift cage in the descending direction exceeding a predetermined limit.

(*c*) The application of the safety gear shall not cause the lift cage platform to become out of level in excess of $\frac{1}{4}$ inch per foot measured in any direction.

(*d*) When the safety gear is applied, no decrease in the tension of the governor rope or motion of the car in the descending direction shall release the safety gear.

(*e*) When a safety gear comes into operation, it should automatically open circuit the operating circuit, but it should be possible for a *responsible person* to release the safety gear after a thorough inspection of the equipment and the taking of any necessary precautions, by reversing the direction of the motion of the machine.

(*f*) The safety gear shall operate to stop and sustain the lift cage in the event of failure of the suspension ropes, or in the event of the lift exceeding a predetermined maximum speed in the descending direction when a speed governor is fitted.

(*g*) Every safety gear shall operate positively and mechanically, independently of any springs used in its construction.

(*h*) Any levers or dogs operated by shafts shall be keyed to such shafts by B. S. S. No. 46 keys.

(*i*) The design of the safety gear shall provide for its application to both guides and to each side of such guides equally.

(*j*) Any additional rope used solely for the purose of operating the safety gear shall be led over independent pulleys, running on independent shafts.

(*k*) All bearings for drums and screw shafts in connection with the safety gears shall be of non-ferrous metals.

(*l*) The lift cage speed governor shall be set to cause the application of the safety gear at a speed not more than 40 per cent., and not less than 15 per cent., above the contract speed, provided that no governor shall be required to trip at a speed less than 175 feet per minute and with the instantaneous type of safety gear shall trip at a speed not exceeding 250 feet per minute.

(*m*) The *counterweight safety gear*, if any, may be operated by the same governor and governor rope used to operate the lift cage safety gear, provided it complies with the requirements for, and for the application of, counterweight safety gears. Provision shall be made to cause the application of the counterweight safety gear at a speed greater than the lift cage safety gear, but at not more than 10 per cent. in excess of that at which the lift cage safety gear applies.

(*n*) Broken rope safety gears of the instantaneous type may be used on counterweights within the following limits :—

Contract speed (Ft. per minute).	Total weight of counterweight in pounds.
250	2,000
200	3,000
150	4,000
125	5,000

(*o*) The types of safety gear shall be of the following three kinds, namely :—

(*i*) Instantaneous type, limited to speeds not exceeding 200 feet per minute (Type I).

(*ii*) Gradual Wedge Clamp type, with gradual increasing retarding force. (Type G. W. C.).

(*iii*) Flexible Guide Clamp type, with constant retarding force. (Type F. G. C.).

(*p*) No safety gear shall be permitted to stop an ascending lift cage or *counterweight*. If an ascending car is to be stopped on account of overspeed, a safety gear shall be fitted to the counterweight for this purpose. The governor may, however, open the motor circuit and apply the brake in the event of overspeed in the ascending direction.

(*q*) The governor shall be placed where it cannot be struck by the lift cage in case of over-travel and where there is sufficient space for the full movement of the governor parts.

(*r*) The motor control circuit and the brake control circuit shall be opened before or at the same time as the governor trips.

(*s*) Governor ropes shall run clear of the governor jaws during the normal operation of the lift.

(*t*) The proper tripping speed of the governor shall be stamped on the governor base or on a brass plate attached to the base.

(*u*) When replacing governor ropes, they shall be of the same size, material and capacity as the ropes supplied originally and installed by the makers of the lift, except that where a rope of different characteristics is proposed, a test of the car and/or counterweight safety gear shall be made, to determine the fitness of the new ropes.

(*v*) The arc of contact between the governor jaws shall be such that no cutting, tearing or deformation of the rope shall result from the operation of the safety gear.

(*w*) It is recommended that governor gears have self-lubricating bearings which do not require frequent attention.

(*x*) In case of a safety gear actuated by means of a rope unwinding from a drum, such drum shall have at least three complete turns on the drum after the safety gear has been applied and the car stopped. The minimum diameter of such drum shall be 5 inches (five inches). The device for holding the safety rope or rod in position during normal operation shall be fixed to the steel-frame work of the car and not to the car bodywork. The ends of the governor rope shall be held by a clevis or other similar means, which shall effect its purpose by friction. The clevis or other holding device shall be supported by or from the steel framework of the car and not fixed to the car bodywork.

(*y*) No safety gear shall depend on the completion or maintenance of an electric circuit for its operation. All safety gears shall be applied mechanically.

(*z*) The gripping surfaces of car or counterweight safety gears shall not be used to guide the lift cage or counterweight but shall run free of the guides during normal operation of the lift.

Note.—A pawl or ratchet shall not be held to constitute a sufficient safety for lifts travelling in a vertical or substantially vertical direction.

17. *Safety Gear Tests.*—(*a*) A contract load test shall be made by the Inspector of Lifts of each new lift, before such lift is put into service for normal and regular operation. This test shall be made to determine whether the safety gear will operate satisfactorily within the specified limits.

(*b*) The test shall be carried out in the presence of the Engineer who is entrusted with the work of installing the lift.

(*c*) The maximum stopping distances of cars with safety gears of types G. W. C. and F. G. C. with the contract load in the lift cage, and the minimum stopping distances with the attendant only in the lift cage shall be as follows :—

Speed	Maximum distances with contract load.		Minimum distances with attendant only in the lift cage.	
	Type G. W. C.	Type F. G. C.	Type G. W. C.	Type F. G. C.
	Ft. in.	Ft. in.	Ft. in.	Ft. in.
300 ft/m.	7 0	1 9	1 6	0 6
400 ft/m.	7 9	2 6	1 8	0 9
500 ft/m.	8 9	3 6	1 10	1 0
600 ft/m.	10 0	4 9	2 1	1 3
700 ft/m.	11 3	6 6	2 4	1 6
800 ft/m.	12 3	8 3	2 8	9

(*d*) Stopping distance shall mean the actual slide as measured by the marks of the guides.

(*e*) The runaway test shall be made with all electrical apparatus intact, except for the overspeed contact or cut-out on the governor. For lifts operating directly from alternating current the governor shall be tripped by hand at the maximum speed obtainable.

(*f*) At each examination the safety gear shall be tested with the lift cage stationery and the lift cage shall be lowered to ensure that the safety gear functions correctly.

18. *Slack Cable Switch.*—All lifts, having winding drum machines, shall be equipped with an effective slack cable switch which will cut off the power and stop the machine if the lift cage is obstructed in its travel in the descending direction. Slack cable switches shall be constructed so as to be self-setting or self-resetting when the slack in the cable has been taken up.

19. *Counterweights.*—(*a*) All *counterweights* shall run in rigid steel guides. If an independent car counterweight be used, it shall not be of such a weight as will cause undue slackening of any of the suspension ropes during acceleration or retardation.

(*b*) *Counterweight sections*, whether or not carried in frames shall be secured by at least two tie rods passing through holes in all the sections. Such tie rods shall have lock nuts at each end, further secured by split pins, and the factor of safety of the threaded portion of the bolts shall be not less than 10.

20. *Lift Machines.*—(*a*) No friction gearing and clutch mechanism shall be used for connecting the main gear to the hoisting drum or sheaves.

(*b*) No belt or chain driven machine shall be used to raise the lift cage. No worm gear having cast iron teeth shall be employed.

(*c*) Winding drum and traction machines for power driven lifts shall be equipped with the brakes applied automatically by means of springs in compression only or by gravity, when the operating device is in the "of" position or in the event of the power being cut off from any cause.

(*d*) Electric lift machines shall be provided with brakes released electrically.

(*e*) No single earth fault, short circuit or counter-E.M.F. shall prevent the brake from being applied during normal operation.

21. *Sheaves and Drums.*—(*a*) All sheaves and leading pulleys shall be of disc construction, i.e. without spokes, and properly stiffened.

(*b*) All driving sheaves fixed to and revolving with a shaft shall be fixed by means of standard sunk keys, to comply with B.S.S. No. 46, current edition.

(*c*) Traction sheaves, drums and worm-wheels shall be fixed with at least two keys as above, except when the design renders the use of keys unnecessary.

(*d*) All sheaves and pulleys shall be fitted with flanges or shrouds and finished grooves. "U" grooves shall be to the terms of B.S.S. No. 329, current edition.

(*e*) The motor of each lift machine or the worm shaft shall be arranged so as to provide hand-winding facilities and shall be suitably marked for the direction of up and down travel of the lift cage.

22. *Shafts.*—(*a*) Any shaft carrying a sheave or pulley and fitted between dead eyes or other housing shall be stepped, i.e., reduced in diameter at or near the point of entry at each end.

(*b*) Any shaft where stepped, shall be turned to a reasonable radius at the point of reduction in diameter.

23. *Operation and Control.*—(*a*) A manually operated main disconnection switch shall be installed in the main circuit cables of electric lift machines or motor generator sets. This switch shall be placed close to and visible from the machine or motor generator set it controls.

(*b*) When metal to metal contacts are used on the controller switches for opening the main circuits, or for stopping a lift machine, at least two independent current breaks shall be incorporated in the design.

(*c*) In the case of an automatic (push button operated) lift, no operation of a spring or springs in tension nor the completion of another electric circuit shall be depended upon to break the circuit to stop the lift at terminal landings.

(*d*) The interruption of the electrical circuit shall stop and/or shall prevent the movement of the car.

(*e*) Each lift machine operated by a polyphase A. C. motor shall be protected against phase reversal or failure. This shall not apply to an A. C. motor forming part of a motor generator.

(*f*) No control system shall be used which depends on the completion or maintenance of an electrical circuit for the interruption of the power supply and the application of the electro-mechanical brakes when the lift cage reaches the terminal floors; neither for the operation of the safety gears, nor for the closing of a contractor by an emergency "stop" button, except that this regulation shall not apply to dynamic breaking nor to speed control devices.

(*g*) Automatic (push button operated) lifts shall conform to the following requirements :—

(*i*) It shall not be possible to start the lift cage under normal operation unless every landing door and/or gate is in the closed position.

(*ii*) The landing push buttons shall be inoperative during the whole time an occupied lift cage is in use. The landing push buttons shall remain inoperative until the person or persons using the lift have vacated the lift cage and the landing gate or door has been again closed, except that in cases where a pre-selector circuit is used, the push bottons may be utilised for this purpose provided they do not in any way interfere with the direction of the current journey and that a time lag is provided to regulate the restarting of the lift cage.

(*iii*) If moveable lift cage floor construction is used the lift cage may be moved with its gate open, when it is not occupied, but it shall be inoperative from the lift cage push buttons when the moveable floor is not depressed. The entire floor within the car enclosure shall be moveable and shall operate when a weight of 30 lbs. is placed upon it at any point.

(*iv*) No hand-rail or seat shall be fitted in the lift cage with moveable floor construction.

24. *Capacity and Loading.*—(*a*) The contract load test shall be made by the Inspector of Lifts of every new power lift installation, before it is put into general use. Such contract load test shall be made with full load in the lift cage and in the presence of the Engineer who is entrusted with the work of erecting the lift.

(*b*) The brakes, limit switches, buffers, safety gear or gears and speed governor, if fitted, shall be made to function during each test, and the electrical wiring and connections shall be tested for earthing, insulation resistance and general soundness.

(*c*) A plate shall be affixed to each lift cage in a conspicuous position and shall bear at least the following particulars :—

The maximum capacity of the lift in terms of passengers, calculated at 150 lbs. per passenger.

25. *Buffers.*—(*a*) Buffers of the spring, oil or equivalent type shall be fitted below the lift cage of every lift.

(*b*) Spring buffers or their equivalent may be used with lifts having a contract speed not exceeding 300 feet per minute.

(*c*) Oil buffers or their equivalent shall be used with lifts having a contract speed in excess of 300 feet per minute.

(*d*) The maximum retardation of oil buffers, based on governor tripping speed, shall not be in excess of 80·5 feet per second, i.e., 2·5 times gravity retardation.

(*e*) The minimum total stroke of oil buffers shall be based on an average retardation of 32·2 feet per second, based on governor tripping speed.

(*f*) Oil buffers shall be provided with a means of determining easily the amount of oil in them.

(*g*) Buffers shall be placed symmetrically with respect to the centre of gravity of the lift cage, and shall be so arranged that the lift cage, in ordinary circumstances of operations, cannot strike them.

(*h*) Counterweights shall be fitted with buffers, similar to those specified for lift cages and arranged symmetrically below the weight.

26. (*a*) All wiring in connection with the lift installation shall be installed in accordance with the rules and regulations of the Indian Electricity Act, 1910, and the Bombay Fire Insurance Association, respectively and metallic covering shall be used to protect all cables wherever possible.

(*b*) All metallic covering to wiring shall be properly earthed and continuity shall be maintained throughout.

(*c*) All control circuits shall be fused, or otherwise protected against faults or overloads, independently of the main circuits.

(*d*) All controlling cables shall be of flexible construction and shall comply with the specification laid down in the regulations of the Bombay Fire Insurance Association.

27. *Terminal Limit Switches.*—(*a*) Every electric lift shall be provided with upper and lower terminal limit switches arranged to stop the car automatically within the top and bottom overtravels from any speed attained in normal operation. Such limit switches are to act independently of the operating device, the ultimate or final limit switches and the buffers. (In the case of handrope or rod operating devices the terminal stopping device may operate in conjunction with the operating device).

(*b*) Terminal stopping limit switches may be fitted to the lift cage in the lift well or in the motor room, and such switches shall be brought into operation by the movement of the lift cage.

(*c*) Electric lifts having handrope or rod operating device shall have stops fastened securely to the rod or rope, arranged to centre the operating device for stopping the lift cage.

(*d*) Electric lifts having winding drum machines with handrope or rod, lever or wheel operating devices, shall have a device to centre the operating device automatically.

28. *Ultimate or Final Limit Switches.*—(*a*) Electric lifts shall, in all cases, be provided with ultimate or final limit switches arranged to stop the car automatically within the top and bottom clearances independently of the normal operating device and the terminal limit switches, but with the buffers operative. The switches and the oil buffer shall be so arranged that the opening of the switch and the engagement of the buffer shall be as nearly simultaneous as is possible. When spring buffers are employed, the switch shall open before the buffers are engaged.

(*b*) Ultimate or final limit switches shall act to prevent movement of the lift cage under power in both directions of travel and shall, after operating, remain open until the lift cage has been moved by hand winding to a position within the limits of normal travel.

(*c*) Ultimate or final limit switches shall not be mounted on the lift cage and shall be operated by the movement of the lift cage in the lift well. Electric lifts having winding drum machines shall have in addition, stopping limit switches operated by the machine.

(*d*) Ultimate or final limit switches shall not control the same switches on the controller as the terminal limit switches unless two or more separate and independent switches are provided, two of which shall be closed to complete the motor and brake circuit in each direction of travel. When the ultimate or final limit switches control the same switch or switches on the controller as the operating device or the terminal limit switches, they shall be connected in the control circuit on the opposite side of the line.

(*e*) Ultimate limit switches designed to open the main circuit of the motor may control the same switch or switches on the controller as the terminal limit switches, but when such ultimate limit switches are employed on direct current power supplies they shall be provided with additional contacts to control the brake circuits.

FORM A.

(*See* section 4 and rule 3.)

Application for permission to erect lifts.

(To be submitted to the Inspector of Lifts, Bombay.)

(To be filled in in English.)

Full name and address of the applicant ..

Name and address of Agent, if any. ..

Wheher a license has been previously gratnted. (Details to be given.)

Type of lift proposed to be erected. (A sketch of the lift and erection plans should be attached.)

The rated maximum speed of the lift ..

The makers' or designer's rated capacity in weight.

The maximum number of passengers in addition to the lift operator which the lift can carry.

The total weight of the lift cage carrying the maximum load.

The weight of the counterweight ..

The number, description, weight and size of the supporting cables.

The depth of the pit from lowest part of the lift cage when at the lowest floor.

Details of the construction of the overhead arrangement with the weight and sizes of the beams.

Date (Signature of the applicant.)

FORM B.

[*See* section 5 and rule 4 (1).]

Notice intimating the completion of the work of erection of a lift and application for a licence to work the lift.

To

The Inspector of Lifts, Bombay.

Subject.—Erection of lift at the (premises).

Sir,

With reference to letter No. dated from the Electrical Engineer to Government, Bombay, by which permission has been granted to erect a lift at the abovementioned premises, I/we have to state that the work of erection of the lift was completed on . We further request that a license for working the lift may be granted. The work of erection of the lift has been carried out in accordance with the Bombay Lifts Rules, 1940.

A fee of Rs. 20 has been paid into the Reserve Bank of India, / Government Treasury at and a chalan for that amount is enclosed.

Yours faithfully,

.....,

(Signature of the owner or owners of the premises.)

FORM C.

(*See* sections 5 and 6 and rules 4 and 5.)

GOVERNMENT OF BOMBAY.

License for Working Lifts.

Mr.
Messrs. is/are

HEREBY AUTHORISED TO WORK THE LIFT INSTALLED IN THE PREMISES owned by and situated subject to the conditions mentioned in the Bombay Lifts Rules, 1940.

Electrical Engineer to Government,
Bombay.

Dated at

The day of 19 .

FORM D.

(*See* Rule 5.)

Application for permission for working a lift installed prior to the 1st June 1940.

(To be submitted to the Inspector of Lifts, Bombay.)

(To be filled in in English.)

Full name and address of the applicant ..

Name and address of Agent, if any ..

Type of lift erected. (A sketch of the lift should be attached.)

The rated maximum speed of the lift ..

The maker's or designer's rated capacity in weight.

The maximum number of passengers in addition to the lift operator which the lift can carry.

The total weight of the lift cage carrying the maximum load.

The weight of the counterweight ..

The number, description, weight and size of the supporting cables.

The depth of the pit from the lowest part of the lift cage when at the lowest floor.

Details of the construction of the overhead arrangement with the weight and sizes of the beams.

Full details as to in what respects the lift does not comply with the requirements laid down in the schedule to the Bombay Lifts Rules, 1940.

A fee of Rs. 20 has been paid into the Reserve Bank of India, Bombay / Goverment Treasury at and a chalan for that amount is attached.

(Signature of the applicant.

Date

FORM E.

(*See* Rule 8.)

Notice.

Under sub-section (*1*) of section 8 of the Bombay Lifts Act, 1939, I hereby give notice that on

at A.M./P.M. I will visit the building

in which the

lift is installed / is being installed / in connection with which an application for a license has been received,

for the purpose of inspecting the lift / the lift installation / the site for the lift.

(Signature)
Inspector of Lifts.

Dated at

The day of 19 .

Mr./Messrs.

FORM F.

(*See* Rule 8.)

Form of Order under section 8 (2) of the Bombay Lifts Act, 1939.

No. of 19 .

Dated 19 .

To

..... (Name of licensee.)

.....

1. Whereas it appears to me that the lift installed at the premises owned by you is in an unsafe condition, I hereby call upon you under sub-section (*2*) of section 8 of the Bombay Lifts Act, 1939, to carry out such repairs and/or alterations to the said lift as are stated in the accompanying sheet on or before the day of 19 and to report compliance in writing to me.

2. I hereby also order that you shall discontinue the use of the lift and shall not resume the working thereof until the repairs and/or alterations referred to in paragraph 1 above have been carried out and the unsafe condition of the lift is removed and until a written permission to resume the working of the lift is granted by me.

(Signature) .....,

Inspector of Lifts.

Dated at

The day of 19 .

FORM G.

(*See* Rule 9.)

Notice of Accidents to Lifts.

To

The Inspector of Lifts, State of Bombay.

Under sub-section (*1*) of section 9 of the Bombay Lifts Act, 1939, I/we hereby inform you that an accident has occurred in the operation of lift at the premises owned by me/us on the details of which are given below :—

I/We have discontinued the working of the lift, pending permission to resume the working.

Yours faithfully,

Dated at

The day of 19 .

To

The Inspector of Lifts, Bombay.
The Commissioner of Police, Bombay.
The District Magistrate, ...

THE BOMBAY REVENUE TRIBUNAL ACT, 1939 (BOM. XII OF 1939).

G. N., R. D., No. 2029/39, dated 9th May 1940 (B. G., Pt. IV-B, p. 565). S. 4 (3)

Under the provisions of rule 4-A of the rules regulating the grant by Provincial Governments of licences to prospect for minerals and the grant of mining leases in British India, published in the Resolution of the Government of India, in the Commerce and Industry Department (Geology and Minerals), No. 7552-7581-121, dated the 15th September 1913, as subsequently amended, and sub-section (3) of section 4 of the Bombay Revenue Tribunal Act, 1939 (Bom. XII of 1939), the Government of Bombay is pleased to cancel Government Notification in the Revenue Department, No. 1191, dated the 5th February 1918, as amended by Government Notification in the Revenue Department, No. 2029/39, dated 18th March 1940, and to direct that the Bombay Revenue Tribunal constituted under section 3 of the said Act shall have jurisdiction to entertain and decide appeals from and applications for revision of orders passed by a Collector or a Divisional Forest Officer under the said rules.

G. N., R. D., No. 4877/33, dated 31st July 1939 (B. G., Pt. IV-A, p. 1190). S. 12 Bombay Revenue Tribunal Rules, 1939.

Amended by G. N., R. D., No. 4877/33, dated 5th December 1940.

Amended by G. N., R. D., No. 4877/33, dated 22nd September 1941.

In exercise of the powers conferred by section 12 of the Bombay Revenue Tribunal Act, 1939 (Bom. XII of 1939), the Government of Bombay is pleased to make the following rules, namely :—

1. These rules may be called the Bombay Revenue Tribunal Rules, 1939.

2. In these rules, unless there is anything repugnant in the subject or context,—

(a) "Act" means the Bombay Revenue Tribunal Act, 1939 ;

(b) "member" means a member of the Tribunal and includes the President thereof ;

(c) "non-official" means a person who at the date of his appointment does not hold any office of profit under the Government of India or the Government of any State.

3. The Tribunal shall consist of a President and two other members.

4. (1) The President shall be a person who has officiated as a Judge of a High Court or has served as, or exercised the powers of a District Judge or Chief Judge of the Small Causes Court, Bombay, for a period of not less than ten years and has retired from service of the Government of India or the Government of any State.

(2) Of the other two members, one shall be a non-official. The other shall be, in the case of an appeal or application for revision, the Commissioner of the Division from which such appeal or application is made, and in the case of a reference for

enquiry relating to a settlement report in respect of any land under section 117-KK of the Bombay Land Revenue Code, 1879, the Commissioner of the Division in which such land is situate :

Provided that when an appeal or application is made against the decision or order of a Commissioner, the person who gave such decision or made such order shall not be a member of the Tribunal in respect of such appeal or application but such other person, who is a Commissioner of a Division, as may be appointed by the President, shall be the member of the Tribunal in respect of such appeal or application :

Provided further that if in any case any member other than the President is for any reason unable to give his opinion in such case or there is a difference of opinion in respect of such case between the President and the other member, such other person who is a Commissioner of a Division (and who in the case of an appeal or an application for revision is not the person against whose decision or order the appeal or application is made) as may be appointed by the President, shall be a member of the Tribunal in respect of such case.

Explanation.—For the purposes of this rule the City of Bombay shall be deemed to be a part of the Northern Division.

5. (1) The President and the non-official member shall hold office ordinarily for a period of three years :

Provided that the President and the non-official member of the Tribunal constituted for the first time under the Act shall hold office for a period of two years, from the date of their appointment.

(2) A person who has held office as a member for a period mentioned in sub-rule (1) shall be eligible for reappointment.

(3) The President or the non-official member may at any time resign his office.

6. Notwithstanding anything contained in rule 5, the State Government may in its discretion terminate at any time the appointment of the President or the non-official member, if, in its opinion, such President or member is unable or unfit to continue to perform the duties of his office.

7. (1) If any vacancy occurs by leave of absence, deputation, death, resignation, expiry of the period of appointment or termination of the appointment of the President or the non-official member or for any other cause whatsoever such vacancy shall be filled by appointment of a person qualified for appointment under rule 4.

(2) Until the vacancy in the office of the President is filled under sub-rule (1) the senior-most member shall act as the President.

8. The Under Secretary to the Government of Bombay in the Revenue Department shall be the *ex-officio* Secretary to the Tribunal.

9. The headquarters of the Tribunal shall be at Bombay.

APPENDIX A.

G. N., R. D., No. 4877/33, dated 11th August 1939 (B. G., Pt. IV-A, p. 1348).

S. 13 Bombay Revenue Tribunal Regulations 1939.

Amended by R. T. Notifn. No. 4877/33, dated 26th March 1940.

Amended by R. T. Notifn. No. 4877/33, dated 29th April 1940.

Amended by R. T. Notifn. No. 4877/33, dated 5th December 1940.

Amended by R. T. Notifn. No. 4877/33, dated 7th October 1942.

In exercise of the powers conferred by section 13 of the Bombay Revenue Tribunal Act, 1939 (Bom. XII of 1939), and with the previous sanction of the Government of Bombay the Bombay Revenue Tribunal is pleased to make the following regulations, namely :—

1. These regulations may be called the Bombay Revenue Tribunal Regulations, 1939.

2. In these regulations, unless the context or subject otherwise requires—

(1) "Commissioner" means a Commissioner as defined in the Bombay General Clauses Act, 1904.

(2) "Secretary" means the Secretary to the Tribunal.

(3) "Joint Secretary" means the Assistant Commissioner of the Division from which the appeal or application for revision in any case is recorded.

(4) "President" means the President of the Tribunal.

(5) "Tribunal" means the Bombay Revenue Tribunal constituted under section 3 of the Bombay Revenue Tribunal Act, 1939.

3. The Tribunal shall have no jurisdiction—

(i) in any matter in which disciplinary action has been taken against a revenue officer,

(ii) in any matter which is sub-judice in a Court of Law.

4. All appeals and applications for revision or review made to the Tribunal shall be addressed in cases received from the City of Bombay to the Secretary and in cases received from other areas to the Joint Secretary. They may be sent to him by post or presented in person or through a pleader. When they are sent by post they shall not be received unless postage due has been paid.

5. Every appeal or application made to the Tribunal shall be accompanied by the decision or order (either in original or a certified copy) against which the appeal or application is made.

6. On receipt of an appeal or application for revision or review the Secretary or the Joint Secretary, as the case may be, shall acknowledge its receipt and shall refer it to the Commissioner, who will be a member of the Tribunal for the appeal or application. Every such acknowledgment shall show the date of receipt of the appeal or application, the name and address of the appellant or applicant and the number under which the appeal or application is registered. In cases where the appeal or application is received by a Joint Secretary, such Joint Secretary shall forward a copy of such acknowledgment to the Secretary for his information.

7. (1) If such Commissioner is of the opinion that the appeal or application does not lie to the Tribunal or that it should be rejected summarily, he shall endorse on it his opinion and forward it to the President through the non-official member of the Tribunal.

(2) If such Commissioner is of the opinion that the appeal or application lies to the Tribunal and that it should not be rejected summarily, he shall direct that the record and proceedings of the case should be called for. After receipt of the record and proceedings and after recording his opinion thereon he shall forward the appeal or application with the record and proceedings to the President through the non-official member of the Tribunal.

(3) Thereupon the non-official member shall forward the appeal or application with the record and proceedings after recording his opinion thereon to the President.

(4) At the time of forwarding the appeal or application to the President through the non-official member of the Tribunal under sub regulation (1) or (2) the Commissioner shall also send an intimation to the Secretary of the date of despatch of it to the non-official member.

8. The Tribunal shall not entertain any appeal or application for revision unless it is satisfied that the appellant or applicant, as the case may be, has presented all such appeals or applications allowed by the law for the time being in force.

9. Pending a decision on the appeal or application made to the Tribunal, the Commissioner concerned may direct the execution of the decision or order against which the appeal or application is made to be stayed on such conditions as he thinks fit.

10. The business of the Tribunal shall ordinarily be disposed of by circulation, but when the President or the other two members are of the opinion that a joint sitting is necessary, a joint sitting shall be held at such place as the President may determine and the decision shall be reached after personal discussion and if necessary after giving a hearing to the parties concerned.

11. The Tribunal may either annul, reverse, modify or confirm the decision or order under appeal or revision or review or may direct the officer whose decision or order is under appeal or revision or review to make such further investigation or to take such additional evidence as it may think necessary :

Provided that no decision or order shall be annulled, reversed or modified to the prejudice of any party unless opportunity has been given to such party to represent his case before the passing of the final decision or order.

12. Where all the members of the Tribunal agree, their decision shall be in accordance with the opinion of all the members ; but where there is a difference of opinion between them, the decision of the majority shall prevail. If for any reason any of the members, other than the President, is unable to give his opinion and the President and the other member agree in their opinion, the decision shall be in accordance with such opinion. The President shall prepare the order in accordance with the decision so arrived at and the order so prepared shall be signed by all the members of the Tribunal. The Secretary shall thereafter communicate the order to the Collector or other officer concerned and the appellant or the applicant, as the case may be.

13. The Collector or the officer to whom the order is communicated under regulation 12 shall, within a reasonable time, inform the Secretary that the order has been duly carried out.

14. The Tribunal may make direct reference for advice or opinion of the Law Officers of Government in accordance with the Law Officers' Rules in the matter pending before it under these regulations.

14A. (1) The Tribunal may permit any party to appear or act by a pleader in any appeal or application made to it for revision or review.

(2) No pleader except an Advocate (O. S.) shall present an appeal or application or appear or act for any party in any appeal or application made to the Tribunal unless he has been appointed for the purpose by such party by a document* in writing signed by such party or by his recognised agent or by some other person duly authorised by or under a power-of-attorney to make such appointment. Every such appointment shall be produced before the Tribunal.

Explanation.—For the purpose of this Regulations, the expression "recognised agent" shall have the meaning assigned to it in rule 2 of Order 3 of the First Schedule to the Code of Civil Procedure, 1908.

15. When an appeal or application is to be returned as not being drawn up or presented in conformity with these regulations, it shall be endorsed with a memorandum specially pointing out which of these regulations have been infringed or not complied with.

16. When any record and proceedings are called for by the Tribunal and sent to it, the Collector or the officer concerned, as the case may be, shall send with such record and poceedings a diary in chronological order showing the date when such proceedings were commenced and the dates and pages of the principal orders passed and of important papers or maps or plans filed in such proceedings.

R. T. Notifn. No. 4877/33, dated 4th November 1940 (B. G., Pt. IV-B, p. 1137).

S. 13 Bombay Revenue Tribunal Records Inspection, Search and Copies Regulations.

Amended by R. T. Notifn. No. 4877/33, dated 23rd June 1941.

In exercise of the powers conferred by section 13 of the Bombay Revenue Tribunal Act, 1939 (Bom. XII of 1939), and with the previous sanction of the Government of Bombay, the Bombay Revenue Tribunal is pleased to make the following regulations for inspection, search and obtaining copies of documents from the records of the Tribunal, namely :—

1. These Regulations may be called the Bombay Revenue Tribunal Records Inspection, Search and Copies Regulations.

2. In these Regulations unless the context or subject otherwise requires—

(1) "Secretary" means the Secretary to the Tribunal, and

(2) "Tribunal" means the Bombay Revenue Tribunal constituted under section 3 of the Bombay Revenue Tribunal Act, 1939.

3. The records of the Tribunal shall be kept in the custody of the Secretary.

*Note.—The document referred to in regulation 14A shall be liable to a stamp duty of Rs. 2 under Article 48 (c) in Schedule I to the Indian Stamp Act, 1899.

4. Any person desiring to make inspection of, or obtain copies of any records of the Tribunal or extracts therefrom, shall make an application in writing to the Secretary.

5. The Secretary may in his discretion grant any application made under Regulation 4 :

Provided that no inspection shall be allowed or a copy granted of any opinion recorded by a member of the Tribunal or any advice or opinion obtained by the Tribunal from any Law Officer of Government.

6. When any application under Regulation 4 is received the Secretary shall endorse on it the date on which it is received and the number and date of the order passed on it. If the application is granted, he shall also endorse on it—

(i) the date on which inspection of the records was allowed or copies thereof were given ;

(ii) the amount of the fees received from the applicant ; and

(iii) the name of the person in whose presence the inspection was allowed.

7. No inspection of any records of the Tribunal shall be allowed except in the presence of a clerk in the Revenue Department appointed in that behalf by the Secretary.

8. The fees for the inspection of any document shall be Rs. 5 for every day or part thereof on which such inspection was allowed.

9. The fees for copying and comparing a document a copy of which is granted shall be as follows :—

(*a*) *Copying fees.*—Two annas for every hundred words or fraction thereof, and double this rate if the original is in a tabular form.

(*b*) *Comparing fees.*—Half the copying fees chargeable under clause (*a*), subject to the maximum of Re. 1.

10. When an application is made for inspection or for copy of any records of the Tribunal or extracts therefrom and such application does not distinctly describe the number, date and nature of the document of which inspection or copy is required, or if the description of such document given in the application is incorrect and it consequently becomes necessary to search the records to find it, a fee of Rs. 5 for every day or part thereof on which such search is made shall be payable, whether after examination of the document by the Secretary the application for inspection or copy is granted or not.

*11. The fees prescribed for furnishing a copy of a document shall be calculated in advance and shall also be paid in cash or sent by a money-order in advance :

Provided that if the fees cannot be calculated in advance a sum of not less than Rs. 20 shall be deposited by the applicant before a copy of any document is furnished to him.

**Note.*—Before a Copy of any document is furnished to an applicant under these Regulations, the stamp duty payable under Article 24 in the First Schedule to the Indian Stamp Act, 1899 (II of 1899), shall be paid by him.

THE BOMBAY AGRICULTURAL PRODUCE MARKETS ACT, 1939 (BOM. XXII OF 1939).

G. N., R. D., No. 991/33(a), dated 5th April 1941 (B. G., Pt. IV-B, p. 232). S. 25

In exercise of the powers conferred by section 25 of the Bombay Agricultural Produce Markets Act, 1939 (Bom. XXII of 1939), the Government of Bombay is pleased to delegate to the Collectors, the Prant Officers, the Mamlatdars and the Mahalkaris the power to grant licenses under sub-section (*2*) of section 4 of the said Act.

G. N., R. D., No. 991/33, dated 28th June 1941 (B. G., Pt. IV-B, p. 569). S. 26 Bombay Agricultural Produce Markets Rules, 1941.

Amended by G. N., R. D., No. 991/33, dated 23rd January 1942.
Amended by G. N., R. D., No. 991/33, dated 6th April 1942.

In exercise of the powers conferred by section 26 of the Bombay Agricultural Produce Markets Act, 1939 (Bom. XXII of 1939), the Government of Bombay is pleased to make the following rules :—

PART I.

PRELIMINARY.

1. *Short title.*—These rules may be called the Bombay Agricultural Produce Markets Rules, 1941.

2. *Definitions.*—In these rules, unless there is anything repugnant in the subject or context,—

(*i*) "Act" means the Bombay Agricultural Produce Markets Act, 1939.

(*ii*) "Authorised weights, measures or weighing or measuring instruments" mean such weights, measures or weighing or measuring instruments as are permitted to be used under the provisions of the Bombay Weights and Measures Act, 1932.

(*iii*) "Broker" means an agent whose ordinary course of business is to negotiate and make contracts on payment of commission for the purchase or sale of agricultural produce on behalf of his principal, but does not include the servant of such principal whether engaged in negotiating or making such contracts.

(*iv*) "Financial year" means the year commencing on the first day of April.

(*v*) "Form" means a form appended to these rules.

(*vi*) "General commission agent" means a person who on behalf of another person and in consideration of "adat" or commission makes or offers to make, a purchase or sale of agricultural produce or does or offers to do anything necessary for completing and carrying out such purchase or sale.

(*vii*) "Government" means the Government of Bombay.

(*viii*) "Market" includes a market proper and market yard.

(*ix*) "Market proper" means the area declared to be a market proper under clause (*b*) of rule 51.

(*x*) "Market yard" means any area declared to be a market yard under clause (*a*) of rule 51.

(*xi*) "Organisation of agriculturists" means the co-operative societies recognised to be organisation of agriculturists under rule 3.

(*xii*) "Revenue year" means the year commencing on the first day of August.

(*xiii*) "Secretary" means the person appointed as the Secretary of the Market Committee under these rules or any officer or servant appointed for the time being to perform the duties of the Secretary.

(*xiv*) "Section" means a section of the Act.

(*xv*) "Surveyor" means a person whose business it is to survey a consignment of agricultural produce for sale in regard to quality, refraction, adulteration and such other purposes.

(*xvi*) "Trader" means a person buying or selling agricultural produce as a principal or as the duly authorised agent of one or more firms.

(*xvii*) "Unauthorised trade allowance" means a trade allowance not prescribed by these rules or bye-laws.

(*xviii*) Words and expressions used in the Act and not defined in these rules shall have the meanings assigned to them in the Act.

3. *Organisations of agriculturists.*—All rural co-operative credit societies, better farming, better living and joint farming co-operative societies and taluka development associations registered under the Bombay Co-operative Societies Act, 1925, and operating in a market area shall, for the purposes of section 6, be deemed to be the organisations of agriculturists for the said area.

Exception.—Co-operative multi-purpose societies and co-operative sale societies doing business of buying or selling agricultural produce, with or without commission, shall not be deemed to be organizations of agriculturists for the purposes of the said section.

PART II.

Constitution of Market Committees and Election.

4. *Number of members of a market committee.*—Except in the case of market committees deemed to have been constituted under section 31, every market committee shall, subject to the provisions of sub-section (*1*) of section 6, consist of such number of members as may be determined by the Collector.

5. *Constitution of the first market committee.*—Except in the case of any market area for which a market committee is deemed to have been constituted under section 31, the Collector, on the declaration of any area as a market area under sub-section (*1*) of section 4, shall, in consultation with the Director, nominate persons to constitute the market committee for the said area.

6. *Disqualifications for memberships.*—A person shall be disqualified for being chosen as a member of a market committee—

(1) if his name is not entered on the voters' list prepared and maintained under these rules ;

(2) if he has not attained the age of 21 ;

(3) if he has been adjudged by a competent court to be of unsound mind ;

(4) if he is an undischarged insolvent ;

(5) if he has been convicted and sentenced by a court, within or without India, to imprisonment for an offence punishable with imprisonment for a term exceeding six months unless such disqualification has been removed by an order passed by Government ;

(6) if he is a servant of the market committee or holds a license from such committee as a broker, weighman, measurer or surveyor ;

(7) if he has directly or indirectly any share or interest in any contract or employment with, or on behalf of, or under, the market committee :

Provided that a person shall not be chosen as a member representing the traders' constituency if he does not ordinarily reside within 10 miles of the market yard and if he has not been registered under rule 65.

Explanation.—For the purposes of this rule a person shall be deemed to be ordinarily residing within 10 miles of the market yard, if he resides in such yard for not less than 180 days in a calendar year.

7. *Constituencies.*—For the purpose of electing members to a market committee in every market area, the following shall be the constituencies :—

(1) Agriculturists' Constituency.

(2) Traders' Constituency.

(3) Local Authorities' Constituency.

8. *Persons qualified to vote*—

I. *Agriculturists' Constituency.*

The following persons shall be qualified to vote in an agriculturists' constituency :—

(*a*) all members of the organizations of agriculturists operating in the market area ;

(*b*) where no such organisations exist, the following agriculturists ordinarily residing within the market area, namely :—

(*i*) holders of land whether unalienated or alienated, assessed or assessable jointly or severally at not less than Rs. 8, at the end of the revenue year immediately preceding the financial year in which the election is held, or

(*ii*) tenants of unalienated lands assessed at not less than Rs. 8 at the end of the revenue year immediately preceding the financial year in which the election is held, or

(*iii*) tenants of alienated lands assessed or assessable at not less than Rs. 8 at the end of the revenue year immediately preceding the financial year in which the election is held.

Explanations.—(1) A person shall be deemed to reside ordinarily within any area if he—

(*a*) has actually resided within the area for an aggregate period of not less than 180 days during the calendar year preceding that in which the lists of voters for the time being under preparation for such area are provisionally published under sub-rule (3) of rule 10 ; or

(*b*) has maintained within the area for an aggregate period of not less than 180 days during the calendar year preceding that in which the lists of voters for the time being under preparation for such area are provisionally published under sub-rule (3) of rule 10, a dwelling for himself in charge of his dependents or servants and has visited such dwelling during the year first mentioned in connection with his business in the area.

(2) If any question arises whether any person is or is not an agriculturist for the purposes of this rule, the Collector shall decide it and his decision shall be final.

(3) No person shall be entitled to have his name entered in the list of voters for more than one market area or as member of more than one organization of agriculturists.

II. *Traders' Constituency.*

The following persons shall be qualified to vote in a traders' constituency :—

(*a*) all persons licensed under sub-section (*2*) of section 4 in the market area before the date fixed in this behalf by the Collector ;

(*b*) all traders approved by the market committee and registered as such under rule 65 before the date fixed in this behalf by the Collector.

III. *Local Authorities' Constituency.*

(*a*) In a case in which the market area is wholly within the limits of a local authority, the members of such local authority shall be elected as provided by section 6 (*1*) (*iii*) (*a*) to (*c*) ;

(*b*) In a case where the market area is within the limits of more than one local authority, each local authority shall select three persons from among the councillors or the members of such local authority and the persons so selected shall be qualified to vote for election of a representative of such local authorities on the market committee.

9. *Names of persons qualified to vote to be reported to Collector or market committee, as the case may be.*—(1) Every organization of agriculturists and every local authority selecting the persons qualified to vote under rule 8-III (*b*) shall report the names of the persons qualified to vote to the Collector on or before the date fixed in this behalf by the Collector.

(2) Every firm, corporation or co-operative society qualified to vote in a traders constituency under these rules shall nominate a person to vote on its behalf and intimate in writing the name of the person, so nominated, to the market committee or its authorised agent, not later than the date fixed in this behalf by the Collector.

10. *Voters' List.*—(1) The Collector or any other person authorised by him in this behalf hereinafter in this rule referred to as such person shall cause to be prepared separate lists of voters qualified to vote for the Agriculturists' Constituency, Traders' Constituency and the Local Authorities' constituency in cases in which there are more than one local authority within a market area. Every such list shall be revised for each triennial election, provided that in the case of the list of voters qualified to vote for the local authorities' constituency Government may direct the revision of such list also at any other time before the next triennial election is due. The Collector or such person shall for this purpose call upon the market committee to prepare from market registers and to furnish to him the names of all persons qualified to vote in the traders' constituency representing the traders' electorate. In market areas which are within the limits of more than one local authority, the Collector or such person shall also call upon each of the local authorities concerned to intimate to him the names of the persons qualified to vote in the local authorities' constituency. He shall also call upon the organizations of agriculturists within the market area to intimate to him the names of persons qualified to vote under the agriculturists' constituency and where no organisation of agriculturists exists, he shall cause to be prepared a list of persons qualified to vote under rule 8-I (*b*).

(2) Every list of voters prepared under sub-rule (1) shall show the full name, residence and serial number of the voter and the nature of his qualification.

(3) Every such list shall be published provisionally in such manner as the Collector or such person may deem fit.

(4) When publishing the list provisionally the Collector or such person shall fix a date, not later than one month from the date of publication of the lists before which any application for the inclusion, exclusion or correction of any entry shall reach him. The Collector or such person or any other officer appointed by the Collector for the purpose shall hear and decide any applications and objections received before the date so fixed and the decision of the Collector, such person or the other officer relating to such application or objection shall be final.

(5) The Collector or such person shall cause the lists to be amended in accordance with the orders passed under sub-rule (4) and shall cause them to be republished finally in the regional language of the market area in such manner as he may deem fit.

(6) Copies of such final lists shall be made available for inspection and sale in whole or in part in the office of the Collector or such person.

(7) The final lists republished under sub-rule (5) shall remain in force and continue in operation as the list of voters for the purpose of any bye-election.

(8) Notwithstanding anything contained in the above sub-rules, the provisions of sub-rules (3) to (7) shall not apply to the voters' list of the local authority constituency in cases in which there are more than one local authority for a market area.

11. *Calling upon the constituencies to elect.*—As soon as may be after the final publication of lists of voters under sub-rule (5) of rule 10 the Collector shall call upon the constituencies to elect their representatives to the market committee on a date fixed by him in this behalf.

12. *Notice to elect.*—Not less than 42 days before the date fixed for the election, the Collector shall publish in the regional language of the market area and in such other languages as he may deem necessary, a notice in a newspaper circulating in the market area and post copies of such notice in village chavdis and other conspicuous places in the villages included in that area stating—

(*a*) the number of persons to be elected;

(*b*) the date on which, the place at which and the hours between which nomination papers shall be presented to him or to any other person authorised by him in this behalf, which date shall not be less than 14 days from the date of the publication of notice;

(*c*) the date on which scrutiny of nomination papers shall be made;

(*d*) the date on which and the place or places at which the votes of the electors shall be taken, if there be a poll, and the hours during which the poll shall be taken; and

(*e*) the day on which and the place and hour at which the votes shall be counted.

13. *Nominations.*—(1) Each candidate shall, on the date fixed under clause (*b*) of rule 12 deliver to the Collector or to any other person authorised by him in this behalf, a nomination paper in Form I.

(2) Every nomination paper shall be signed by two persons qualified to vote as proposer and seconder and the candidate shall sign a declaration on it expressing his willingness to stand for election.

(3) The same person may sign, as proposer or seconder, as many nomination papers as there are vacancies to be filled. Each candidate shall be nominated by a separate nomination paper.

(4) The Collector or the person authorised by him in this behalf shall, on receiving a nomination paper enter in the nomination paper its serial number and shall endorse thereon the date on which and the hour at which the nomination paper was delivered to him.

(5) Where any person has signed whether as proposer or seconder a larger number of nomination papers than there are vacancies to be filled, those of the papers so signed which have been first received up to the number of vacancies to be filled shall be deemed to be valid.

(6) Nomination papers received after the date and the time appointed under clause (*b*) of rule 12 shall be rejected.

14. *Verification of nominations.*—On the presentation of a nomination paper, the Collector or the person authorised by him under rule 13 shall verify the names of the proposer, seconder and the candidate with the list of voters.

15. *Publication of list of nominations.*—As soon as may be after the date fixed for the presentation of nomination papers, the Collector or the person authorised by him under rule 13 shall publish a list in Form II of all nominations received with a notice that the nomination papers shall be scrutinized on the date appointed under clause (*c*) of rule 12 at the place and hour specified in the notice. The list of nominations and the notice shall be published in such manner as the Collector or the person authorised as aforesaid may deem fit.

16. *Scrutiny of nominations.*—On the date fixed for the scrutiny of nominations under clause (*c*) of rule 12, the candidates, one proposer and one seconder of each candidate and one other person duly authorised in writing by each candidate may attend at such time and place as the Collector or the person authorised by him under rule 13 may appoint, and the Collector or the person so authorised shall give them all reasonable facilities for examining the nomination papers of all candidates.

17. *Disposal of objections and rejection of nomination.*—(1) The Collector or the person authorised by him under rule 13 shall then examine the nomination papers and shall decide all objections which may be made at the time to any nomination and may, either on such objection or on his own motion after such summary enquiry if any, as he thinks necessary, reject any nomination on any of the following grounds :—

(*i*) that the candidate, the proposer or the seconder is a person whose name is not registered on the list of voters, or

(*ii*) that the nomination has not been made in the manner prescribed under these rules.

(2) The Collector or the person authorised as aforesaid shall endorse on each nomination paper his decision accepting or rejecting the same and, if the nomination paper is rejected, shall record in writing a brief statement of his reasons for such rejection. The scrutiny shall be completed on the day fixed in this behalf under clause (*c*) of rule 12 and shall not be adjourned on any ground.

18. *Withdrawal of candidature.*—(1) Any candidate may withdraw his candidature by notice in writing subscribed by him and delivered either in person by the candidate himself or by any of his proposers or seconders to the Collector or to the person authorised by him under rule 13, within three days of the date succeeding that fixed for the scrutiny of nominations under clause (*c*) of rule 12.

(2) On completion of the scrutiny of nominations and after the expiry of the period within which candidature may be withdrawn under sub-rule (1), the Collector or the person authorised by him as aforesaid shall prepare a list of persons, whose nominations are in order and who have not withdrawn their candidature, in Form III, and cause it to be affixed in some conspicuous place in his office, in the taluka office concerned and in the office of the market committee, not less than seven days before the date fixed for the election.

19. *Procedure at election.*—(1) If the number of candidates who are duly nominated and who have not withdrawn their candidature in the manner and within the time specified in sub-rule (1) of rule 18 exceeds that of the vacancies to be filled, a poll shall be taken.

(2) If the number of such candidates is equal to the number of vacancies, all such candidates shall be declared to be duly elected.

(3) If the number of such candidates is less than the number of vacancies, all such candidates shall be declared to be duly elected, and the Collector or the person authorised by him under rule 13 shall call upon the constituency to fill the remaining vacancy or vacancies, as the case may be, within such time as may be specified.

20. *Arrangements for the holding of election, etc.*—The Collector or the person authorised by him in this behalf shall make such arrangements as may be necessary for the holding and supervision of the election, for the scrutiny of the ballot papers and for declaration of the results of the election.

21. *Voting.*—Every voter shall have as many votes as there are members to be elected on behalf of the constituency and may give all his votes to one candidate or may distribute them among the candidates as he chooses :

Provided that the total number of votes given by him shall not exceed the total number of members to be elected for the constituency.

21-A. *Procedure at election when equality of votes exists.*—If, when a poll has been taken at an election, an equality of votes is found to exist between any candidates, and the addition of one vote will entitle any of the candidates to be declared elected, one additional vote shall be given by the Collector or the person authorised by him in this behalf to the candidate or, as the case may be, the candidates, selected by lot drawn in the presence of the Collector or the person authorised by him in such manner as the Collector or such person may determine.

22. *Death of candidate before poll.*—If after the taking of a poll has become necessary and before the poll is taken a candidate who has been duly nominated dies, the Collector shall, upon being satisfied of the fact of the death of the candidate, countermand the poll and the election proceedings shall be commenced anew in all respects as if for a new election :

Provided that no fresh nomination shall be necessary in the case of a candidate who stood validly nominated at the time of the countermanding of the poll.

23. *Intimation to the Collector of the name of the representative of a local authority.*—In a case in which the market area is wholly within the limits of a local authority, the local authority shall intimate in writing to the Collector the name of the person elected as its representative under clause (*iii*) of sub-section (*1*) of section 6 before a date fixed by the Collector in this behalf.

24. *Filling in casual vacancies in the market committee.*—The procedure for holding a bye-election for purposes of sub-section (*4*) of section 6 shall be the same as that for a general election, provided that the preparation and publication of fresh lists of voters shall not be necessary.

25. *Publication of the names of elected and nominated members of the Committee.*—The names of elected and nominated members of the market committee shall be published in the *Official Gazette* as soon as conveniently may be after their election and nomination.

26. *Person disqualified to cease to be member.*—No person shall continue to be a member of the market committee if at any time after his nomination or election, as the case may be, he becomes subject to any of the disqualifications mentioned in rule 6, and his seat shall thereupon become vacant :

Provided that a person representing an organization of agriculturists, a firm, corporation or a co-operative multi-purpose or sale society shall be debarred from continuing to be such member if he ceases to be a member of the organization of agriculturists, firm, corporation or co-operative multi-purpose or sale society of which he was the representative.

27. *Expenditure in connection with or incidental to such elections.*—All expenditure incurred by the Collector or the person authorised by him under rule 13 in connection with or incidental to the election of members of the market committee shall be recoverable under section 24 from the market committee by the Collector as an arrear of land revenue.

PART III.

MARKET COMMITTEE, ITS CHAIRMAN, OFFICERS AND SERVANTS AND DISPUTES SUB-COMMITTEE.

Their Functions and Powers.

28. *Election of chairman of the committee.*—(1) The Collector or any person authorised by him in this behalf shall call the first meeting of a newly constituted market committee to elect one of its members to be its chairman. For the purpose of election of the chairman, the Collector or the person authorised by him shall preside over the meeting but shall not vote.

(2) At such meeting a candidate for the office of chairman shall be proposed by one member and seconded by another. The names of all the candidates proposed and seconded shall be read out by the president of the meeting.

(3) If there is only one duly nominated candidate, he shall be declared to have been elected.

(4) If there are two or more such candidates, the votes of the members present at the meeting shall be taken.

(5) Every member wishing to vote shall be supplied with a voting paper on which the names of all the candidates shall be written legibly in English and in the regional language of the place. Every voting paper shall be initialled on the reverse by the president.

(6) A voter shall then place a mark against the name of the candidate for whom he wishes to vote, fold it up and deposit it in a ballot box placed before the president. If a voter is unable to do so, the president may mark the voting paper in the presence of the members, according to the voter's directions, and deposit it in the ballot box.

(7) The president shall then open the ballot box and count the votes in the presence of the members and declare the member who secures the largest number of votes to have been elected as the chairman. If there is an equality of votes among two or more candidates, the president shall draw lots in the presence of the members and the person whose name is first drawn shall be declared to have been elected.

(8) Any voting paper which contains the signature of the voter or on which the mark is placed against more than one name or the reverse of which does not contain the initials of the president, shall be invalid.

(9) Immediately after the meeting, the president shall cause the notice declaring the name of the person elected to be affixed in some conspicuous place in the office of the market committee.

(10) The voting papers shall be sealed by the president and retained in safe custody in the office of the market committee, and the packet containing the voting papers shall not be opened or destroyed except under the orders of the Collector.

29. *Functions and powers of the chairman.*—The chairman shall be the Chief Executive Officer of the committee and all officers and servants of the committee shall, subject to these rules and to the directions, if any, given by the committee, be subject to his control. He shall conduct all correspondence and shall be responsible for the keeping of accounts, for the punctual rendering of all reports and returns and for the custody of all amounts not depoited in the treasury or with a bank approved by the Director.

30. *Term of office and casual vacancy in the office of chairman.*—(1) Any person elected as chairman shall hold office for one year from the date of his election as chairman :

Provided that if the term of the market committee expires before the expiry of his term of office, such person shall hold office until a new market committee comes into office and elects its chairman ;

Provided further that if such person ceases to be a member of the market committee, he shall cease to hold the office of chairman.

(2) In the event of the chairman dying, resigning or ceasing to hold the office for any reason before the expiry of his term of office, the Collector or any person authorised by him in this behalf shall call a meeting of the market committee to elect another person as chairman. The Collector or the person authorised by him shall preside over such meeting but shall not vote. Every chairman elected under this sub-rule shall hold office so long as the chairman in whose place he is elected would have held it if the vacancy had not occurred.

31. *Resignation by chairman or member.*—The chairman or any member of the market committee shall resign his office by a written application to the Collector. No such resignation shall take effect until it is accepted by the Collector.

32. *Meeting of the Committee.*—(1) Every meeting of the market committee other than those referred to in sub-rule (1) of rule 28 and sub-rule (2) of rule 30, shall be presided over by the chairman or in his absence by a member elected by the meeting to preside for the occasion.

(2) The chairman shall be entitled to speak and vote on all questions at the meeting.

(3) The member presiding over a meeting in the absence of chairman shall, for that meeting or during the period in which he presides over it, have all the powers of the chairman.

(4) All questions which may come up before the committee at any meeting shall be decided by the vote of the majority of the members present at the meeting and in

every case of equality of votes the chairman or the presiding member shall have and exercise a second or casting vote.

33. *Minute book to be kept.*—A minute book shall be kept by every market committee and a record of the proceedings of every meeting shall be entered therein by, or under the supervision of, the chairman or other presiding member and shall be signed by him. The minute book shall be permanently preserved. It shall be open to the inspection at all reasonable hours to members of the market committee, and also to the Collector, the Director or any other person authorised by the Collector or the Director in this behalf.

34. *Persons entitled to attend meetings.*—The Collector or any person authorised by him in this behalf and the Director or any person authorised by him in this behalf shall be entitled to attend any meeting of the market committee but they shall not be entitled to vote. A copy of the notice convening every meeting shall be sent to the Collector and the Director or any person authorised by the Director in this behalf.

35. *Copy of proceedings of meetings.*—A copy of the proceedings of every general meeting of the market committee shall be forwarded to the Collector and to the Director or any person authorised by the Director in this behalf.

36. *The market committee to provide for certain matters.*—After paying all sums due to Government, the market committee shall, so far as the funds at its disposal permit but subject to the provisions of the Act and these rules, provide—

(1) for the maintenance and improvement of any enclosure or building which may constitute the market yard,

(2) for the construction and repair of buildings, *chabutras* and other erections necessary for the purpose of the market, and

(3) for the health, convenience and safety of the persons using the market.

37. *Appointment of Disputes Sub-Committee.*—(1) The market committee may appoint a sub-committee called the disputes sub-committee consisting of—

(*i*) one of the nominated members of the committee, who shall be the chairman of the sub-committee ;

(*ii*) one of the representatives of the agriculturists on the market committee ;

(*iii*) one of the representatives of the traders on the market committee ; and

(*iv*) the representative of local authorities on the market committee or, if there is no representative of local authorities on the committee, any other member of the committee,

to arrange for the settlement of disputes between buyers and sellers or their agents including disputes regarding the quality or weight of the article, the allowances for wrappings, containers, dirt or impurities or deductions from any cause :

Provided that the chairman of the market committee shall not be a member of the disputes sub-committee.

(2) The Collector or any person authorised by him in this behalf may require a disputes sub-committee to appoint in respect of each market yard specified by him a panel of not less than 12 persons but not more than 24 persons to act as arbitrators in the settlement of the disputes aforesaid. Every person included in the panel shall be either an agriculturist living in or near the market area or a trader doing business in such area.

(3) Where any such dispute arises, the parties thereto may agree to the settlement thereof in accordance with the following provisions :—

(*a*) The dispute shall be reported to the Secretary of the market committee who shall try to settle the dispute. If he fails, the dispute shall be settled in the following manner on payment of fees fixed by the market committee.

(*b*) Each party to the dispute shall select one arbitrator from the panel appointed for the purpose by the disputes sub-committee.

(*c*) If the arbitrators fail to agree, they may appoint an umpire who shall also be chosen from the panel aforesaid to settle the dispute.

(*d*) An appeal shall lie against the decision of the arbitrators or umpire to the disputes sub-committee.

(*e*) The decision of the arbitrators or umpire or, where an appeal has been made to the disputes sub-committee, the decision of such sub-committee shall be final. The dispute shall, as far as possible, be decided on the spot and on the same day.

(4) No business shall be transacted at a meeting of such-sub-committee unless there be present at least two members.

(5) Every meeting of the sub-committee shall be presided over by the chairman of the sub-committee and in his absence by a member elected by the meeting to preside on the occasion.

(6) All questions which may come before the sub-committee at any meeting shall be decided by the vote of majority of the members present at the meeting and in every case of equality of votes, the chairman or the presiding member shall have and exercise a second or casting vote.

(7) The decision of the sub-committee shall be final.

(8) The market committee shall maintain a full record of all the disputes which come before the disputes sub-committee.

38. *Servants of the market committee.*—(1) The market committee shall appoint a Secretary and may employ such other officers and servants as may be necessary and proper for the efficient execution of its duties.

(2) Such officers and servants shall be divided into two classes :—

(*i*) superior officers and servants, and

(*ii*) inferior servants.

Superior officers and servants shall be the Secretary, clerks and such officers and servants as the Collector may determine. Inferior servants shall be peons, watchmen and other menial servants.

(3) The terms and conditions of service of the superior officers and servants shall be such as are approved by the Collector and those of the inferior servants shall be such as the market committee itself may decide.

(4) The appointments of superior officers and servants shall be made by the market committee subject to the approval of the Collector. Any punishment, revision in pay or terms of service or dismissal of the superior officers and servants shall also be subject to the approval of the Collector. All inferior servants shall be under

the full control of the market committee, but the committee shall make an immediate report to the Collector in regard to their appointments, pay, punishment, dismissal and other matters relating to such servants.

39. *Dutis of market committee.*—The market committee shall furnish all information which the Collector or the Director or the officers duly authorised by either of them may require. In addition to the duties prescribed by the Act and the rules and its own bye-laws the market committee shall also be responsible for—

(1) the maintenance of proper checks on all receipts and payments by its officers;

(2) the proper execution of all works chargeable to the market committee funds; and

(3) keeping a copy of the Act and of the rules and notifications issued thereunder and of its bye-laws open to inspection free of charge at its office.

PART IV.

Market Fund, Expenditure and Accounts.

40. *The Market Committee Fund.*—All money received by the market committee shall be credited to the fund called the Market Committee Fund. Except where Government on application by the market committee or otherwise shall direct, all money paid into the market committee fund shall be credited at least twice a week in full into Government treasury or sub-treasury or a bank duly approved for this purpose by the Director. All balance from the fund shall be kept in such treasury or sub-treasury or bank and it shall not be drawn upon except in accordance with these rules.

41. *Expenditure.*—(1) Every cheque drawn on behalf of the market committee shall be signed by the chairman and its Secretary. In the absence of the chairman it shall be signed by any two members of the market committee and the Secretary and in the absence of the Secretary by the Chairman and one of the members of the market Committee. No such cheque shall be drawn except on a regular detailed bill, either for payment immediately or for issue or recoupment of the imprest, which has been examined and passed by the Chairman. The amount of imprest shall be such as is authorised by the market committee.

(2) Except in the following cases the chairman shall not pass any bill unless the expenditure detailed therein has received the previous sanction of the market committee :—

(1) Salary and allowances of establishment;

(2) Payment for works and repairs sanctioned by competent authority;

(3) Urgent expenditure for which there is budget provision or which does not exceed Rs. 50 :

Provided that in the absence of the chairman the bills for payment of the above nature may be passed and signed by any two members.

42. *Remittance to treasury or bank.*—All remittances to the Government treasury or sub-treasury or bank shall be accompanied by challans or deposit slips in duplicate.

The monthly or other periodical statement of accounts furnished by the treasury or the bank shall be regularly filed and made available for audit.

43. *Pass-book.*—The pass-book shall be got written up-to-date at least once a month by the treasury or sub-treasury department or the bank by which the original account is kept.

44. *Submission of budget.*—(1) For the purposes of rules 44 to 50, the market year shall be held to commence on the 1st September and end on the 31st August.

(2) The market committee shall hold a meeting each year during the first week of July to prepare a budget of income and expenditure for the ensuing market year. The budget shall be submitted to the Director or any officer authorised by him in this behalf not later than the 15th July for approval and the abstract accounts of the receipts and expenditure of the previous market year shall be submitted to the Director or any such officer not later than the 1st November.

(3) No expenditure shall be incurred for which there is no budget provision unless it can be met by reappropriation from savings under other heads.

45. *Works to be included in the budget.*—No works for which plans and estimates have not been previously prepared and sanctioned may be included in the budget.

46. *Evidence of sanction.*—Plans and estimates for works estimated to cost less than Rs. 500 shall be signed by the chairman of the market committee. In case of original works estimated to cost more than Rs. 500 the professional approval of the municipal engineer, when the market is situated within a municipal district or a municipal borough, and in other cases, of the district local board engineer, and, cases in which there is no such municipal engineer or the district local board engineer, of the Executive Engineer of the Public Works Department division shall be obtained and evidenced by his countersignature.

47. *Supervision of Works.*—All works shall be carried out under the supervision of the Chairman of the market committee or of any member of the market committee duly authorized in this behalf by the Chairman.

48. *Permanent Fund.*—The surplus amount of the market committee fund, at the close of each year shall be credited to the permanent fund of the committee and it shall be used only towards incurring the expenses of a permanent nature such as the construction of buildings, acquisition or purchase of sites.

49. *Annual Report.*—At the end of each market year, the market committee shall prepare an annual report and submit copies of it to the Collector, the Director and to such other officers as may be appointed by the Collctor and the Director.

50. *Accounts and Audit.*—(1) The accounts of the market committee should be maintained in such manner as the Director may direct.

(2) The accounts of the market committee shall be audited locally by the auditors and ub-auditors of the Co-operative Department on payment of such audit fees as may be fixed from time to time by the Director. At the time of audit, the Chairman or any other member of the market committee authorised by him in this behalf shall cause to be produced all accounts registers, documents and other relevant papers which may be called for by the audit officer for the purposes of audit. An explanation called for by that officer for the settlement of any discrepancy shall also be immediately furnished to him.

PART V.

MARKET YARD AND MARKET PROPER.

51. *Declaration of market yard and market proper.*—Government may by notification in the *Official Gazette*, declare—

(*a*) any enclosure, building or locality in any market area to be a market yard.

(*b*) any area, including all land with the buildings thereon, within such distance of the market yard, as it thinks fit, to be a market proper :

Provided that a market proper so declared shall include industrial concerns in the said area with their compounds, godowns and warehouses, where the agricultural produce is stored.

52. *Control and conservancy of the market yard.*—(1) The market committee shall maintain one or more market yards as may be declared under the preceding rule. Subject to these rules and to the general or special orders of Government and to such control as is by these rules or by any other law vested in the Collector or Director or in the municipality, or the district local board, or the village panchayat the market committee shall manage market yards having regard always to the convenience of the trade in agricultural produce and the purposes for which the control is vested in the market committee. The market yard shall be open for trading at such hours as the market committee may from time to time fix. Carts or consignments of agricultural produce intended for sale shall be assembled in the market yard in such manner and at such times as may be permitted, and ingress and egress may be permitted to such persons and at such times as the market committee may consider proper.

(2) In the market area the market committee shall exercise only such rights as may be necessary for the convenient control of the market and for the convenience and comfort of the persons using the market and for collection of the fees, in accordance with the provisions in the bye-laws.

(3) (*a*) The market committee may require the owner or manager of any industrial concern located within the market area to furnish such information in respect of all the agricultural produce for which the market is established and which is handled or used by the industrial concern, as the committee may think necessary for the purposes of the control of the market.

(*b*) Any owner or manager so required to furnish information shall be entitled to appeal against such requisition within one fortnight from the date of the requisition to the Collector whose decision in the matter shall be final.

PART VI.

FEES—LEVY AND COLLECTION.

53. *Market fees.*—(1) The market committee shall levy and collect fees on agricultural produce brought and sold in the market area at such rates as may be specified in the bye-laws.

(2) The market committee shall also levy and collect license fees from traders, general commission agents, brokers, weighmen, measurers, surveyors and other persons operating in the market according to rates specified in the bye-laws.

(3) No fees shall be levied on agricultural produce brought from outside the market area into the market area for use by the industrial concerns situate in the market area or for export, and in respect of which a declaration has been made and a certificate has been obtained in Form IV.

(4) The seller who is himself the producer of the agricultural produce offered for sale and the buyer who buys such produce for his own private and/or household use shall be exempt from payment of any fees under this rule.

54. *Recovery of fees.*—(1) The fees on agricultural produce shall be payable as soon as it is brought into the market yard or market proper or market area as may be specified in the bye-laws.

(2) The license fees shall be paid along with the application for license but in case the market committee refuses the grant of a license, the fees recovered shall be refunded to the applicant.

55. *Receipt.*—(1) The market committee shall maintain a register showing the fees collected by it. A receipt duly signed by the person authorised by the market committee shall be granted to every person in respect of fees collected from him under these rules or the bye-laws.

(2) Every person authorised by the market committee to collect fees shall pass receipts to the payees, keeping counterfoils of the receipts so granted and shall render account of all receipts at least once a day to the person duly authorised in this behalf by the market committee.

56. *Collection of fees.*—The fees shall be collected by the paid servants of the market committee and the right to collect the fees shall not be farmed out.

57. *Servants to wear badges.*—A servant of the market committee authorised to collect fees, shall wear a suitable badge provided by the market committee.

58. *Security.*—The market committee shall take such security, as it thinks fit, from its employees who are entrusted with the handling of money.

59. *Penalty for evasion of payment of fees.*—Any person removing or attempting to remove agricultural produce from the market yard or market proper or market area, as the case may be, before the fee has been paid and the receipt prepared and granted shall, on conviction, be punishable with fine which may extend to Rs. 50.

PART VII.

Sales and Trading in Markets.

60. *Sale of Agricultural Produce.*—(1) All agricultural produce brought into the market shall pass through the market yards and shall not, subject to the provisions of sub-rule (2), be sold at any place outside such yards.

(2) Processed agricultural produce may be sold either in the market yard, or in the market or in the market area, in accordance with the provisions of the bye-laws. Full details of such sales shall be reported to the market committee by the general commission agent, or if no general commission agent is employed in the transaction, by the trader as well as the buyer.

Explanation.—For the purpose of this sub-rule " processed agricultural produce " shall include ginned cotton, cotton seed, husked paddy, groundnut seeds, but not manufactured produce.

(3) Such details of all agricultural produce resold in the market shall also be reported to the market committee in accordance with the provisions of the bye-laws.

(4) The price of agricultural produce brought into the market for sale shall be settled by open auction or by open agreement and not by secret signs and no deductions shall be made from the agreed price of the consignment except for any authorised trade allowance.

61. *Account of sales to be maintained.*—(1) The market committee shall maintain a record in which regular and proper account of each consignment of the agricultural produce brought in for sale in the market shall be kept.

Explanation.—For the purpose of this sub-rule entries collectively relating to more than one consignment shall not be deemed to be a proper and regular account of consignments.

(2) No cart or consignment which has entered a market yard shall be removed from the said yard except on the presentation at the gate of the market yard of a pass issued under the bye-laws.

62. *Agreement to be executed between buyer and seller.*—(1) Every purchaser of agricultural produce shall sign an agreement, in duplicate, in Form V in favour of the seller before removing it from the market area. One copy of the agreement shall be supplied to the seller and the other shall be kept on the record of the market committee. Printed forms of agreement shall be supplied free of cost by the market committee.

(2) Nothing in this rule shall apply to the purchasers of agricultural produce for their own private and/or household use. The purchase by such purchasers shall be subject to such conditions as may be specified in the bye-laws.

63. *Publication of prices.*—The market committee shall, so far as practicable, place at the disposal of those using the market, information on such matters as the prices of the commercial crops ruling at the principal marketing centres of the tract and at the ports serving the same and the stocks held by mills. The information shall be published in such a manner as will be readily available to all persons using the market.

64. *Penalty for disobedience of orders of committee.*—(1) No person shall—

(*a*) enter a market yard in contravention of a direction given by a servant of a member of the market committee,

(*b*) disobey any of the directions of the market committee in regard to the places where carts laden with agricultural produce may stand or loads of agricultural produce may be exposed or in regard to the road by which or in regard to the times at which they may proceed.

(2) Any person contravening or disobeying any of the directions referred to in sub-rule (1) shall, on conviction, be punishable with fine which may extend to Rs. 10 for the first offence and to Rs. 50 for any subsequent offence.

65. *Licensed Traders and General Commission Agents.*—(1) No person shall do business as a trader or a general commission agent in agricultural produce in any market area except under a license granted by the market committee under this rule.

(2) Any person desiring to hold such license shall make a written application for a license to the market committee and shall pay such fee as may be specified in the bye-laws.

(3) On receipt of such application together with the proper amount of the fee the market committee may, after making such enquiries, as may be considered necessary for the efficient conduct of the market, grant him the license applied for. On the grant of such license the applicant shall execute an agreement in such form as the market committee may determine, agreeing to confirm with these rules and the bye-laws and such other conditions as may be laid down by the market committee for holding the license.

(4) Notwithstanding anything contained in sub-rule (3), the market committee may refuse to grant a license to any person, who, in its opinion, is not solvent or whose operations in the market area are not likely to further efficient working of the market under the control of the market committee.

(5) The license shall be granted for a period of one year, after which it may be renewed on application and on payment of such fees as may be specified in the bye-laws.

(6) The names of all such traders and general commission agents shall be entered in a register to be maintained for the purpose.

(7) Whoever does business as a trader or a general commission agent in agricultural produce in any market area without a license granted under this rule or otherwise contravenes any of the provisions of this rule shall, on convition, be punishable with fine which may extend to Rs. 200 and in the case of a continued contravention with a further fine which may extend to Rs. 50 for every day during which the contravention continues after the date of the first conviction, subject to the maximum of Rs. 200.

66. *Powers of the market committee to suspend or cancel the license granted to traders and general commission agents.*—(1) The market committee may, by a resolution passed by a majority consisting of not less than two-thirds of its members, cancel or suspend for a fixed period the license granted to any trader or general commission agent if he contravenes any of the conditions of his agreement or license or of the rules or bye-laws or who, in the opinion of the market committee, is not solvent:

Provided that no order cancelling a license or suspending it for a period more than six months shall be passed without the previous approval of the Collector.

(2) An appeal shall lie against the decision of the market committee given under sub-rule (1) to such officer as may be authorised by the Collector in this behalf and the decision of such officer in such appeal shall be final:

Provided that such appeal is made within 30 days of the date of decision of the market committee and the appellant abides by the decision of the market committee from the date of such decision till the date of the orders passed in appeal.

67. *Licensed brokers, weighmen, measurers and surveyors.*—(1) No person shall do business in any market area as a broker, weighman, measurer or surveyor except under a license granted by the market committee.

(2) Any person desiring to hold such license shall make a written application for a license to the market committee and shall pay such fees as may be specified in the bye-laws.

(3) On receipt of such application together with the proper amount of the prescribed fee, the market committee may, after making such enqiuries as may be considered necessary for the efficient running of the market, grant him the license applied for. On the grant of such license the applicant shall sign an agreement in such form as the market committee may determine agreeing to conform with the bye-laws and such other conditions may be laid down by the market committee for holding the license.

(4) Notwithstanding anything contained in sub-rule (3), the market committee may refuse to grant a license to any person, who, in its opinion, is not solvent or whose operations in the market area are not likely to further the efficient working of the market under the control of the market committee.

(5) The license shall remain in force from the date on which it is granted till 31st August following and may be renewed thereafter on application and on payment of such fees as may be specified in the bye-laws.

(6) The market committee may, by a resolution, cancel or suspend for a fixed period the license granted to any broker, weighman, measurer or surveyor if he contravenes any of the conditions of his agreement or license or of the rules or bye-laws or if in the opinion of the market committee his continuance as a license-holder is likely to be detrimental to the working of the market.

(7) An appeal shall lie against the decision of the market committee given under sub-rule (6) to such officer as may be authorised by the Collector in this behalf and the decision of such officer in such appeal shall be final:

Provided that such appeal is made within 30 days of the date of the decision of the market committee and the appellant abides by the decision of the market committee from the date of such decision till the date of the orders passed in appeal.

(8) The chairman may suspend the license of any broker, weighman, measurer or surveyor for any default for a period which may extend to one month.

(9) No person shall be entitled to do business other than that for which he holds a license or licenses.

(10) No person who is in the service of another person shall be eligible to hold a license as a broker, weighman, measurer or surveyor. If any licensed broker, weighman, measurer or surveyor enters service or does business other than that for which he holds a license or licenses, his license or licenses shall be deemed to have been cancelled.

68. *Charges for brokerage, weighing, measuring and surveying.*—The fee payable to a licensed broker, weighman, measurer or surveyor in respect of his services shall be such as may be specified in the bye-laws.

69. *Keeping of books by broker, weighman, measurer and surveyor.*—Every broker, weighman, measurer and surveyor licensed under these rules shall keep such books in such form and render such periodical returns and at such time and in such form as the market committee may from time to time direct and shall render such assistance in the collection and prevention of the evasion of fees due under these rules and bye-laws and in the prevention of the breach of the rules and bye-laws as may be required by the market committee.

70. *Equipment for weighmen, measurers and surveyors.*—Every weighman, measurer and surveyor shall possess such equipment as may be laid down in the bye-laws.

71. *Employing of a general commission agent, broker or surveyor.*—No person shall, in the absence of an express agreement, be bound to employ a broker, a surveyor or a commissioned agent in any transaction or be required to pay for any broker, commissioned agent or surveyor employed by any other party to a transaction or when none is employed.

72. *Licensed weighman or measurer to wear a badge.*—Every licensed weighman or measurer when plying his trade shall wear a distinguishing badge of a suitable pattern provided by the market committee. A deposit of not less than one and not more than five rupees to cover the cost of the badge shall be paid to the market committee by every licensed weighman or measurer.

73. *Penalties for plying trade without license or badge.*—Any person working in the market as a broker, weighman, measurer or surveyor without a license or any weighman or measurer plying his trade without the authori ed badge shall, on conviction, be punishable with fine which may extend to Rs. 200.

74. *General commission agents, etc., not to receive fees other than those specified for their services.*—No licensed general commission agent or his servant and no broker, weighman, measurer and surveyor shall olicit or receive fees other than those specified for their services in the bye-laws. For contravention of the provisions of this rule their license shall be liable to be cancelled forthwith.

75. *Trader or his servant not to solicit brokerage or weighing, measuring or surveying charges.*—If any trader or his servant or agent solicits or receives any fees for brokerage or weighing, measuring a or surveying charges, his license shall be liable to be cancelled forthwith.

76. *Weighment or measuring by licensed weighmen or measurers.*—In the case of a sale or purchase of agricultural produce, all weighment and measuring shall be done by licensed weighmen and measurers.

77. *Penalties to licensed general commission agent, broker, surveyor, weighman or measurer for demanding or receiving any sum not authorised by rules or bye-laws.*—Any licensed general commission agent, broker, weighman, measurer or surveyor who shall demand, receive or retain or shall permit any other person to demand, receive or retain on account of or under the colour of, fees due in respect of his service, any sum not due under these rules or the bye-laws or a larger sum than is due under these rules or the bye-laws, or from a person who is not liable to pay under these rules or bye-laws and any person who, not being a licensed general commission agent, broker, weighman, measurer or surveyor, shall demand, receive, or retain or facilitate the demanding, receiving or retaining of such sums, shall, on conviction, be punishable with fine which may extent to Rs. 200.

78. *The licensed trader to provide equipment for weighing and measuring.*—(1) The licensed trader shall provide or arrange to provide all such necessary authorised weights and measures and authorised weighing instruments at the time of taking delivery of agricultural produce sold in the market area as may be specified in the bye-laws.

(2) No licensed trader shall use weights and measures or weighing instruments other than authorised weights and measures or weighing instruments.

(3) Any licensed trader who commits a breach of the provisions of this rule shall be deemed to have violated the conditions of his license.

79. *Weights and measures to be used in market area.*—No weight, measure or weighing or measuring instrument other than an authorised weight, measure or weighing or measuring instrument shall be used in any market area.

80. *Units of price quotations to be used in the market area.*—The units of price quotations in every market area shall be in terms of authorised weights and measures and shall be such as are approved by the Director or any officer authorised by him in this behalf.

81. *Inspection of scales, weights and measures.*—The chairman, every member of the market committee and every employee of the market committee authori ed by the market committee in this behalf, shall be entitled, at any time and without notice, to inspect, examine and compare any weight or measure, and weighing or measuring instruments used, kept or possessed in any open place within the limits of the market area, market proper or market yard.

82. *A set of standard weights and measures, weighing and measuring instruments to be kept by the market committee.*—The market committee shall keep at least one set of such weights and measures and weighing and measuring instruments as are standard weights, measures and weighing and measuring instruments, respectively, under the Bombay Weights and Measures Act, 1932, and as are in use in the market area. Such standard weights, measures and weighing and measuring instruments shall be available to the public for inspection and checking at all reasonable hours.

83. *Counterbalancing in weighment.*—If any rope or gunny bag or any other article is used to tie bundles in the pan on the goods side of the scale, a weight equivalent to the weight of the rope or of the gunny bag or of the article so used shall be added to the pan on the weight side of the scales in order to counter balance the weight of the rope or of the gunny bag or of the article used for tying the bundles.

84. *Weighment on a weigh-bridge.*—Where the funds at its disposal permit, the market committee may, and, if required by Government, shall, erect one or more weigh-bridges in the market and shall be responsible for keeping the same in proper working order. Any buyer or seller may at his option have his produce weighed on it on payment of the fees fixed under the bye-laws.

85. *Inspection of weights and measures and weighing and measuring instruments.*—(1) All weights and measures and weighing or measuring instruments which are in use in the market area shall be verified and stamped by the Inspector appointed under section 19 of the Bombay Weights and Measures Act, 1932 (hereinafter referred to as the 'Inspector of Weights and Measures') within whose jurisdiction the market is situated, in accordance with the provisions of the said Act and the rules made thereunder.

(2) Every licensed trader, general commission agent, weighman or measurer shall, on a requisition in writing being made to him by the chairman of the market committee, immediately produce for examination all and every scale and weight and measure used, kept, or possessed by him, or by any person or persons under his authority or control and shall allow the chairman to inspect, examine and compare the same.

(3) On a requisition by the market committee, the Inspector of Weights and Measures, in whose jurisdiction the market area is situated, shall carry out the inspection and testing of weights, measures and weighing or measuring instruments in use in the market area and shall take such action as is consistent with the provisions of the Bombay Weights and Measures Act, 1932, and the rules made thereunder.

(4) An appeal against the decision of the market committee under sub-section (*1*) of section 12 shall lie within thirty days of such decision to the Director of Industries whose decision in such appeal shall be final.

86. *Report regarding unauthorised weights and measures and weighing and measuring instruments.*—If in the absence of an Inspector of Weights and Measures any weight or measure or weighing or measuring instrument is, on examination, reasonably suspected to be unauthorised, a report shall forthwith be made by the chairman of the market committee in writing to the Inspector of Weights and Measures, who shall thereupon proceed in according with the provision of the Bombay Weights and Measures Act, 1932, and the rules made thereunder.

87. *Penalty for disobedience of order to produce weights or measures or weighing or measuring instruments for examination.*—Whoever being bound under the provisions of rule 85 to produce any weights or measures and weighing or measuring instruments for examination or allow the examination, inspection, or comparison of any weight or measure or weighing or measuring instrument, does not produce the weights or measures or weighing or measuring instruments or does not allow the examination, inspection or comparison of any weight or measure or weighing or measuring instrument shall, on conviction, be punishable with fine which may extend to Rs. 200.

88. *Storing of agricultural produce.*—All agricultural produce brought into a market shall be stored at such places as may be specified in the bye-laws. Pending such arrangements, the agricultural produce brought into the market when unsold may be stored in the compounds, godowns and warehouses owned or hired by the licensed general commission agent or broker for that purpose. The goods so stored shall be weighed in the presence of the seller or his representative at the time of delivery for storing and an acknowledgment indicating the kind and weight of goods shall be given by the licensed general commission agent or broker to the seller. Such storing of agricultural produce shall be subject to the payment of such storage fee and such other conditions as may be specified in the bye-laws.

89. *Regulation of advances to agriculturists.*—A licensed general commission agent or broker may give advances either in cash or in kind to agriculturists, but such advances shall be made subject to the following conditions :—

(1) If any agreement is entered into between the lender and the borrower, the lender shall supply a copy of the agreement to the borrower.

(2) When the advances are given from time to time, an account book of the advances given and repayments made shall be kept in the manner laid down in the bye-laws. The lender shall give a copy of such account book to the borrower and enter and attest with his signature every individual transaction of lending and recovery in the copy of the account book so given.

90. *Prevention of adulteration of agricultural produce.*—It shall be the duty of the market committee to take all possible steps to prevent the adulteration of agricultural propduce in the market area and no person doing business in the market area shall cause adulteration of agricultural produce in such area.

Explanation.—For the purposes of this rule, adulteration of agricultural produce shall include the mixing of last pickings of cotton or inferior variety of cotton with superior variety of cotton, bold linseed with small linseed, ghee with vegetable ghee and mixing of earth, dirt and stones or any other extraneous matter with any agricultural produce.

91. *The grading and standardisation of the agricultural produce.*—The market committee shall maintain for the use of sellers and buyers a set of samples of standard grades of agricultural produce sold at the market and shall renew the same as may be necessary from time to time. The market committee shall also arrange to keep and exhibit samples of different grades of agricultural produce with indications of parity prices based on rates ruling in terminal and key markets like ombay, for the information of sellers and buyers.

92. *Keeping of price list.*—The market committee shall maintain daily lists of prices of different types and grades of agricultural produce in respect of which the market is established.

93. *Collector empowered to call meeting of the market committee.*—On requisition from at least half of the number of members of the market committee or of his own motion the Collector may, if he is satisfied about the urgency of the matter, call a special meeting of the market committee to consider matters of immediate importance for the working of the market.

94. *Special provisions when these rules come into force for the first time.*—Government may by notification in the *Official Gazette* suspend during the first year of the establishment of the market in any market area the operation of any of the provisions of these rules for such period and to such extent as it thinks fit.

FORM I.

[*See* Rule 13 (1).]

NOMINATION PAPER.

1. Name of the constituency.
2. Full name of candidate.
3. Number of candidate in the list of voters.
4. Father's or husband's name.
5. Age.
6. Sex.
7. Community.
8. Occupation and address.
9. Full name of proposer.
10. Number of proposer in the list of voters.
11. Signature of the proposer.
12. Full name of the seconder.
13. Number of the seconder in the list of voters.
14. Signature of the seconder.

CANDIDATE'S DECLARATION.

I declare that I am willing to stand for election.

Signature of candidate.

Certificate of delivery by the Collector or other authorised person.

Serial No.

This nomination paper was delivered to me by

(person) at (date and hour).

Signature of the Collector or other authorised person.

Instruction.—Nomination papers which are not presented to the Collector or other authorised persons before (hour) on the day of 19 , shall not be received.

FORM II.

[*See* Rule 15.]

LIST OF NOMINATIONS RECEIVED ON (DATE)
FOR CONSTITUENCY.

1. Serial number.
2. Name of candidate.
3. Father's or husband's name.
4. Sex.
5. Community.
6. Occupation and address.
7. Name of proposer.
8. Name of seconder.

Note.—The nomination papers shall be taken up for scrutiny at the day of at (place) a. m./p. m.

Signature of the Collector or person authorized by him.

FORM III.

[*See* Rule 18 (2).]

LIST OF VALID NOMINATIONS.

1. Serial number.
2. Name of candidate.
3. Sex.
4. Community.
5. Address.

Note.—The poll shall be taken between and at the polling stations already notified.

Signature of the Collector or person authorized by him.

FORM IV.

[*See* Rule 53 (3).]

FORM OF DECLARATION AND CERTIFICATE.

Kind of agricultural produce.	Carts and packages.	Where bought.	Name of seller.	Through whom bought.	Name of the buyer or his agent.
1	2	3	4	5	6

I hereby certify that the above-mentioned agricultural produce has been bought outside the limits of the market area and brought in the limits of the market for the purposes of—

Dated. Signature.

FORM V.

[*See* Rule 62 (1).]

FORM OF AGREEMENT.

Name of seller and his village.
Name of general commission agent, if any.
Name of buyer or his agent.
Number of carts, packages and loads.
Kind of produce, quality.
Rate.
Place of delivery.

Date. Market fee. Ticket number.
Rs. a. p.

Signature of market committee's servant.

I hereby agree that when the above-mentioned agricultural produce is unloaded, if I refuse to take it at the rate stated above, the matter shall be referred for arbitration in accordance with the provisions contained in rule 37 of the Bombay Agricultural Produce Markets Rules, 1941. I bind myself to accept the decision given in such arbitration under the said rule.

Signature of the buyer or his agent.

G. N., R. D., No. 991/33, dated 5th April 1941 (B. G., Pt. IV-B. p, 232).

In exercise of the powers conferred by section 29 of the Bombay Agricultural Produce Markets Act, 1939 (Bom. XXII of 1939), the Government of Bombay is pleased to amend item No. VI of agricultural produce specified in the Schedule to the said Act, as follow, namely :—

For the said item No. VI following shall be substituted, namely :

"VI. Gul, sugar and sugarcane."

G. N., R. D., No. 191, dated 15th June 1950 (B. G., Pt. IV-B, p. 1322).

In exercise of the powers conferred by section 29 of the Bombay Agricultural Produce Markets Act, 1939 (Bom. XXII of 1939), the Government of Bombay is pleased to amend the Schedule of Agricultural Produce annexed to the said Act as follows :—

In item No. III, the following shall be added :—

"(10) Kulthi.

(11) Splits (Dal) of pulses."

THE BOMBAY LAND IMPROVEMENT SCHEMES ACT, 1942 (BOM. XXVIII OF 1942).

G. N., A. & F. D., No. 1707-II-G, dated 16th November 1949 (B. G., Pt. IV-B, p. 2107).

S. 24 Bombay I Improven Schemes Rules, 19

In exercise of the powers conferred by section 24 of the Bombay Land Improvement Schemes Act, 1942 (Bom. XXVIII of 1942), and in supersession of the Bombay Land Improvement Schemes Rules, 1943, the Government of Bombay is pleased to make the following rules, namely :—

1. *Short title.*—These rules may be called the Bombay Land Improvement Schemes Rules, 1949.

2. *Definitions.*—In these rules, unless there is anything repugnant in the subject or context—

(*a*) " Act " means the Bombay Land Improvement Schemes Act, 1942.

(*b*) " Form " means a form appended to these rules.

(*c*) Words and expressions used in the Act and not defined in these rules shall have the meanings assigned to them in the Act.

3. *Notice of publication of scheme under section 5 (2).*—Simultaneously with the publication of a scheme under sub-section (*2*) of section 5 of the Act, the Board shall give a notice in Form No. 1 in English as well as in the regional language of the area to which the scheme relates, of the publication of the scheme to all persons affected thereby. The notice shall be given by affixing a copy thereof on the notice board in the office of the Collector and of the Mamlatdar or Mahalkari concerned and at conspicuous places in the village or villages affected by the scheme.

4. *Manner of publication of scheme under section 9 (2).*—On a scheme being sanctioned under sub-section (*1*) of section 9 of the Act, the Board shall publish it in the *Official Gazette* and in such local newspapers, if any, as it may decide and by affixing notices in Form II in English as well as in the regional language of the area to which the scheme relates on the notice boards in the offices of the Collector and of the Mamlatdar or Mahalkari concerned and at conspicuous places in the village or villages affected by the scheme.

5. *Preparation of statement under section 13 (1).*—The statement to be prepared under sub-section (*1*) of section 13 of the Act shall be in Form III and shall be sent by the Divisional Soil Conservation Officer to the Mamlatdar or Mahalkari concerned as soon as possible after the 1st day of April in each year.

6. (1) *Notice of entry upon land under section 16.*—The notice to be given by a person authorised by the Board or the Collector under section 16 of the Act shall be in Form IV and in the regional language of the area to which it relates.

(2) The notice shall be served on the owner, occupier or person interested in the land—

(*a*) personally by delivering or tendering it to him, or

(*b*) through his agent, if any, by delivering or tendering it to the agent, or

(*c*) by affixing a copy thereof to some conspicuous place on the land to which it relates, or

(*d*) by post.

7. (1) *Extent of enhancement of rent and conditions subject to which enhancement may be made under section 18.*—The owner of any land included in a scheme in any area in which levy of rent payable by a tenant is regulated under any law for the time being in force may, after three years from the date on which the scheme comes into force under section 10 of the Act, enhance the rent payable by a tenant in receipt of such land by not more than 10 per cent. of the rent payable on the date on which the scheme comes into force.

(2) If any such owner desires to enhance the rent by more than the said 10 per cent., he shall apply in writing to the State Government for the purpose.

(3) The State Government shall forward any application received under sub-rule (2), through th Collector, to the Mamlatdar or Mahalkari, within whose jurisdiction the land in respect of which the enhancement of rent is to be made is situated, for inquiry and report on the increase in the profits of agriculture consequent on the carrying out of works on the land under the scheme.

(4) On receipt of an application under sub-rule (3) the Mamlatdar or Mahalkari, as the case may be, shall after giving notice to the tenant of the land hold an inquiry in accordance with the provisions of Chapter XII of the Bombay Land Revenue Code, 1879, and make the required report through the Collector to the State Government.

(5) On receipt of the report under sub-rule (4) the State Government shall determine the extent of enhancement of rent which may be allowed and communicate its decision to the applicant.

8. *Manner in which documents, plans and maps relating to a scheme which has come into force shall be accessible to the public under section 19.*—Documents, plans and maps relating to a scheme which has come into force shall be open for public inspection at the office of the Mamlatdar or Mahalkari concerned at any time during office hours. Certified copies thereof shall be supplied on payment of the fees for certified copies prescribed in Chapter XXII of the Land Revenue Rules (1921).

FORM No. I.

(*See* Rule 3.)

Notice of publication of draft scheme.

Notice of publication is hereby given of the scheme prepared in accordance with the provisions of section 4 of the Bombay Land Improvement Schemes Act, 1942, providing*

for the land described below and situate in the village of

in the taluka/petha district.

Survey number and other description of lands.	Nature of works to be carried out.

All persons affected by the scheme who wish to make any claims or to submit any objections to the said scheme should do so in writing or by appearing personally before the Land Assistant who has been appointed as Inquiry Officer for the scheme on or before †

at

Dated the day of 19 .

(Signed)

Secretary of the Board.

* Description of scheme.

† Date not later than 21 days of publication of the scheme in the *Bombay Government Gazette*.

FORM No. II.

(*See* Rule 4.)

Notice of publication of the scheme.

Notice is hereby given that the scheme providing for*

for the lands described below and situate at the village of

of the taluka/petha district, has been sanctioned by the Board/State Government under sub-section (*1*) of section 9 of the Bombay Land Improvement Schemes Act, 1942. The Board has appointed to execute it under sub-section (*1*) of section 11 of the said Act.

Description of Lands.	Works to be carried out.

Secretary of the Board.

* Description of scheme.

FORM No. III.

(*See* Rule 5.)

Village

Taluka or Petha

District

Rs. a. p.

Total cost recoverable ..

Total annual instalment ..

S. No. and/or Sub-division No.	Area.	Assessment.	Nature of work done.	Total cost of work done.	Total amount to be recovered from owner.
1	2	3	4	5	6

Period of recovery.	Year from which recovery should begin.	Annual instalment.	Person or persons liable to maintain and repair work individually or jointly.	Remarks.
7	8	9	10	11

FORM No. IV.

[*See* Rule 6 (1).]

Form of notice of entry upon land to be given to—

Owners of
Occupiers of
Other persons interested in
land under section 16

To

A. B., Esquire,

Owner of
Occupier of
Mortgagee
Permanent tenant
or other persons interested in

S. No.
Hissa No.
C. T. S. No.
Gaothan Plot No.

of village of taluka/petha district

Notice is hereby given that I, , being duly authorized under section 16 of the Bombay Land Improvement Schemes Act, 1942, by the Board constituted under section 3 thereof / Collector of to enter upon and survey and mark out the land and do all acts necessary for the purpose of preparing, sanctioning and executing a/the scheme, or repairing or maintaining any works under a/the scheme, under the said Act, intend to enter upon the land in the abovementioned

S. No.
Hissa No.
C. T. S. No.
Gaothan Plot No.

for the said purpose at on or after dated
day of 19 .

Person authorised by Board / Collector under section 16 of the said Act.

THE BOMBAY COTTON CONTROL ACT, 1942 (BOM. XXX OF 1942).

G. N., R. C. D., No. 3939/33/9277, dated 21st May 1945 (B. G., Pt. IV-B, p. 95). **SS. 6 (2)& 8 (1).**

In exercise of the powers conferred by sub-section (*2*) of section 6 and sub-section (*1*) of section 8 of the Bombay Cotton Control Act, 1942 (Bom. XXX of 1942), the Government of Bombay is pleased to authorise the following officers within their respective jurisdictions for the purposes of the said sub-sections, namely :—

(1) Deputy Directors of Agriculture, Northern, Central and Southern Divisions.

(2) Cotton Superintendents.

(3) Cotton Overseers.

(4) Agricultural Officers.

G. N., R. C. D., No. 3939/33/9277(a), dated 21st May 1945 (B. G., Pt. IV-B, p. 95). **S. 8(2).**

In exercise of the powers conferred by clause (*b*) of sub-section (*2*) of section 8 of the Bombay Cotton Control Act, 1942 (Bom. XXX of 1942), the Government of Bombay is pleased to authorise Cotton Breeders to exercise the powers of examining the seized cotton and submitting a report thereon to the Director of Agriculture.

G. N., R. D., No. 3939/33, dated 13th July 1944 (B. G., Pt. IV-B, p. 181). **S. 14 Bombay Cotton Control Rules, 1944.**

In exercise of the powers conferred by section 14 of the Bombay Cotton Control Act, 1942 (Bom. XXX of 1942), the Government of Bombay is pleased to make the following rules, namely :—

1. *Short title.*—These rules may be called the Bombay Cotton Control Rules, 1944.

2. *Definitions.*—In these rules, unless there is anything repugnant in the subject or context,

(i) " Act " means the Bombay Cotton Control Act, 1942.

(ii) " Form " means a form appended to these rules.

3. *Sum of money to be paid by way of composition.*—The sum of money to be paid by way of composition under section 7 may extend in the case of an offence under clause (*a*) of section 4 to twenty rupees for the first offence and to fifty rupees for every subsequent offence, and in the case of an offence under clause (*b*) of the said section to five hundred rupees for the first offence and to one thousand rupees for every subsequent offence.

4. *Form of report under section 8.*—The report required to be made under clause (*a*) of sub-section (*2*) of section 8 shall be in Form A or Form B according as the cotton to which the report relates is seized under clause (*a*) or clause (*b*) of sub-section (*1*) of section 8.

5. *Manner of forwarding cotton seized.*—Every officer seizing any cotton under sub-section (*1*) of section 8 shall forward to the officer authorised to receive it under clause (*b*) of sub-section (*2*) of the said section 8 —

(*a*) if the cotton seized weighs more than ten lbs., a sample of such cotton weighing ten lbs., and

(*b*) if the cotton seized weighs less than ten lbs., all the cotton seized.

FORM A.

To

Magistrate $\frac{\text{First}}{\text{Second}}$ Class.

I hereby make a report of the seizure of cotton under clause (*a*) of sub-section (*1*) of section 8 of the Bombay Cotton Control Act, 1942.

1. Description of the land in the controlled area in which prohibited variety of cotton was cultivated :—
   (*a*) District.
   (*b*) Taluka.
   (*c*) Village.
   (*d*) (i) Survey number, and
   (ii) Sub-division number, if any.
2. Name of owner, occupier or person in charge of the land.
3. Particulars of the cotton seized :—
   (*a*) Description.
   (*b*) Quantity.
4. Any other remarks.

Station.....

Date.....

Signature of the Reporting Officer.

FORM B.

To

Magistrate $\frac{\text{First}}{\text{Second}}$ Class.

I hereby make a report of the seizure of cotton under clause (*b*) of sub-section (*1*) of section 8 of the Bombay Cotton Control Act, 1942.

1. Description of the land, building, ship, vessel, vehicle or place in the controlled area in which prohibited variety of cotton was kept :—
   (*a*) District.
   (*b*) Taluka.
   (*c*) Village.
   (*d*) (i) Survey number, and
   (ii) Sub-division number, if any.
   (*e*) Name, number or other particulars necessary for identification of the land, building, ship, vessel, vehicle or place.
2. Name of the owner, occupier or person in charge of the land, building, ship, vessel, vehicle or place.
3. Name of the person from whose possession the cotton was seized.
4. Particulars of the cotton seized :—
   (*a*) Description.
   (*b*) Quantity.
5. Any other remarks.

Station.....

Date.....

Signature of the Reporting Officer.

THE BOMBAY GROWTH OF FOODCROPS ACT, 1944 (BOM. VIII OF 1944).

G. N., R. D., No. 7133/39, dated 20th May 1944 (B. G., Pt. IV-B, p. 144). **S. 1 (2)**

In exercise of the powers conferred by sub-section (2) of section 1 of the Bombay Growth of Foodcrops Act, 1944 (Bom. VIII of 1944), the Government of Bombay is pleased to appoint the 20th day of May 1944 as the date on which the said Act shall come into force in the areas specified in the Schedule hereto annexed.

SCHEDULE.

AREAS.

Northern Division.

1. The Ahmedabad District.
2. The Kaira District.
3. The Broach and Panch Mahals District.
4. The Surat District, excluding the Bulsar taluka and Pardi Mahal.

Central Division.

5. The Ahmednagar District.
6. The East Khandesh District.
7. The West Khandesh District.
8. The Nasik District, excluding the Igatpuri taluka and Peint Mahal.
9. The Poona District, excluding the Maval taluka.
10. The Satara District, excluding the Mahableshwar Mahal.
11. The Sholapur District.

Southern Division.

12. The Belgaum District, excluding the Khanapur and Belgaum talukas and Chandagad Mahal.
13. The Bijapur District.
14. The Dharwar District, excluding the Kalghatgi, Hangal and Kod talukas.

G. N., R. D., No. 10112/39, dated 5th July 1944 (B. G., Pt. IV-B, p. 174). **S. 13**

In exercise of the powers conferred by section 13 of the Bombay Growth of Foodcrops Act, 1944 (Bom. VIII of 1944), the Government of Bombay is pleased to make the following rules, namely:—

1. *Manner of calculating total area of cultivator's holding and area under each kind of crop.*—For the purposes of an order under section 3 or 4—

(i) only whole gunthas shall be taken into consideration and areas less than a guntha shall be rounded off in favour of the cultivator ;

Illustrations.—A cultivator's holding is 5 acres and he grew scheduled foodcrops on 70¼ per cent. of his holding in the twelve months previous to the date of the order under section 3. If he grows scheduled foodcrops on 3 acres and 20 gunthas of his holding of 5 acres in the twelve months immediately following the date of the order instead of 3 acres and 20½ gunthas as in the previous twelve months, he shall be deemed to have complied with the order under section 3.

Similarly, a cultivator, whose holding is 5 acres shall be deemed to have complied with the order under section 4, which prescribes 2/3 as the minimum proportion of the holding in which scheduled foodcrops shall be grown and 1/6 as the maximum proportion of the holding in which scheduled non-foodcrops shall be grown, if he grows scheduled foodcrops in 3 acres and 13 gunthas instead of 3 acres and 13 1/3 gunthas and cotton and tobacco in 34 gunthas instead of 33 1/3 gunthas ;

(ii) the area of a cultivator's holding in which two crops are successively grown during the relevant period of twelve months shall, except when the second crop is grown solely as a green manure crop, be counted twice in arriving at the total area of his holding ;

(iii) the area under the scheduled foodcrops (or scheduled non-foodcrops) shall, except when the second crop is grown solely as a green manure crop, be counted together in respect of the first and the second crops raised during the relevant period of twelve months in arriving at the area in which scheduled foodcrops (or scheduled non-foodcrops, as the case may be) are grown ; and

(iv) where the scheduled foodcrops are grown as a mixed crop in rows with any crop other than a scheduled foodcrop, the area under the scheduled foodcrops shall, subject to the maximum laid down in the Explanation to sections 3 and 4, be calculated according to the proportion which the rows of scheduled foodcrops bear to the rows of the other crops and where the mixed crop is not so grown in rows, the area shall be calculated in such manner as the Collector may determine.

2. *Excluding exempted area of holding from total area of cultivator's holding.*—For the purposes of any order under section 3, 4 or 5, the area of a cultivator's holding exempted from the provisions of the order under section 7 shall be excluded from the total area of the cultivator's holding.

3. *Publication of orders under section 9.*—The order fixing and guaranteeing the prices for cereal foodcrops under section 9 shall also be published by beat of drum in each village to which any order under section 3 or 4 applies.

4. *Application for determination of rent.*—An application for the determination of rent under section 10A shall be in the Form annexed hereto.

5. *Court-fee.*—Every application made to a Mamlatdar under the Act shall bear a court-fee stamp of annas eight and every memorandum of appeal filed before an Assistant or Deputy Collector shall bear a court-fee stamp of rupees two.

FORM OF APPLICATION FOR DETERMINATION OF REASONABLE RENT UNDER SECTION 10A.

(*See* Rule 4.)

To

The Mamlatdar of .....

Sir,

I am the tenant of land measuring .....acres..... .....gunthas of survey No. .....pot/hissa No..... of .....taluka .....district..... By operation of the order issued under section 4 of the Bombay Growth of Foodcrops Act, 1944, I am compelled to grow the scheduled foodcrops specified in column 1 of the schedule appended hereto in the area of my holding specified in column 2 thereof. Mr. .....is the landlord of this land from the year .....The present rent of the land is .....This rent is not reasonable for the following reasons :—

(*Here state the reasons*)

I therefore request you to determine the rent under section 10A of the said Act. I am prepared to pay a rent of Rs. .....as reasonable rent of the land.

Schedule.

Name of scheduled foodcrops.	Prescribed area of holding for growing foodcrops.
	2

Your obedient servant,

Signature.

THE BOMBAY BEGGARS ACT, 1945 (BOM. XXIII OF 1945).

G. N., H.D., No. 7701/4/II, dated 14th November 1946 (B. G., Pt. IV-B, p. 247).

S. 33 Bombay Beggars Rules, 1946.

Amended by G. N., H. D., No. 4668/5, dated 31st May 1948.

Amended by G. N., H. D., No. 4668/5, dated 21st July 1948.

Amended by G. N., H. D., No. 4668/5, dated 3rd June 1949.

In exercise of the powers conferred by section 33 of the Bombay Beggars Act, 1945 (Bom. XXIII of 1945), the Government of Bombay is pleased to make the following rules, namely :—

1. *Short title.*—These rules may be called the Bombay Beggars Rules, 1946.

2. *Definitions.*—Unless there is anything repugnant in the subject or context—

(*a*) " Act " means the Bombay Beggars Act, 1945 ;

(*b*) " Form " means a form appended to these rules ;

(*c*) " Government " means the State Government ;

(*d*) " Officer-in-charge " means an officer-in-charge of a Receiving Centre ;

(*e*) " Superintendent " means a superintendent of a Certified Institution.

3. *Manner of authorising purpose under section 2 (i) (e) (ii)*—(1) A person desiring to solicit or receive, money or food or gifts for any purpose shall apply for a permit—

(i) in respect of the City of Bombay, to the Commissioner of Police,

(ii) in respect of places without the limits of the City of Bombay but within the limits of Greater Bombay, to the State Government, and

(iii) elsewhere, to the District Magistrate concerned.

The application shall contain the following particulars :—

(*a*) full name of the applicant,

(*b*) his age,

(*c*) his occupation,

(*d*) his address,

(*e*) the period, the purpose, and the manner of collection of money, food or gifts,

(*f*) the method of its disposal and the area within which the disposal is to be made.

(2) The Commissioner of Police or the District Magistrate, as the case may be, may, after making such inquiry as he deems fit, issue a permit in Form A, subject to such conditions as he may think it necessary to impose.

(3) The permit holder shall carry the permit with him while soliciting or receiving money, food or gifts and shall, on demand, by a police officer, produce it for inspection.

(4) A breach of any of the conditions of a permit shall render the permit liable to cancellation.

(5) If the Commissioner of Police or the District Magistrate, as the case may be, is of opinion that a permit should not be issued to the applicant, he shall as soon as may be inform the applicant accordingly.

(6) The Government may issue a permit to any person and in respect of any place or area irrespective of such permit having been refused under sub-rule (5).

3A. *Persons authorised for the purposes of section 4.*—Every Superintendent shall be a person authorised for the purposes of section 4.

4. *Manner of keeping persons arrested.*—(1) The Officer-in-charge of a police station or section shall cause a person arrested under section 4 or section 7, until he can be brought before a court, to be kept in the nearest Receiving Centre or at the police station. If kept at the police station such person shall as far as possible be kept apart from other persons in custody therein :

Provided that nothing in this sub-rule shall require his being kept apart from persons kept at the police station in pursuance of this sub-rule.

(2) No person shall in pursuance of sub-rule (1) be kept with a person not of the same sex :

Provided that nothing in this sub-rule shall apply to a child under twelve years of age.

5. *Manner of summary inquiry under section 5 (1).*—So far as may be, the procedure prescribed in the Code of Criminal Procedure, 1898, for the trial of summons cases, and for recording evidence therein shall be followed in making an inquiry under sub-section (*1*) of section 5 of the Act.

6. *Cleansing and medical examination of persons remanded to or detained in Receiving Centre or Certified Institution.*—(1) Every person remanded to or detained in a Receiving Centre or Certified Institution shall —

(i) submit to—

(*a*) preliminary medical examination and such medical dressing as may in the opinion of the Medical Officer be necessary ;

(*b*) such trimming or shaving of the hair on any part of the person as may in the opinion of the Medical Officer be necessary for the administration of medical treatment or for securing cleanliness and health ;

(*c*) thorough cleansing and washing of the body with such materials as may be provided and the complete removal of clothing in order to secure this object ;

(ii) wear such clothes as may be prescribed by the officer-in-charge or the superintendent.

(2) (*a*) Notwithstanding anything hereinbefore contained, a Medical Officer who in pursuance of the provisions of sub-section (*1*) of section 25 examines a person received in a Receiving Centre under section 24 shall carefully and thoroughly examine all parts of the body of such person and shall —

(i) record the result of his examination in Form B if the person is in good health, and in Form C if he is not in good health,

(ii) keep a copy of such record in the history sheet of the person concerned, and

(iii) report the result of his examination to the officer-in-charge :

Provided that a female shall be examined in the female section of the Receiving Centre and as far as possible by a lady doctor.

(*b*) The Medical Officer shall arrange in the Receiving Centre for any immediate medical treatment of the person found to be a contagious laper or a lunatic pending further orders of the Court under sub-section (*3*) of section 25.

(3) Without prejudice to the provisions of any rule, the minimum physical force necessary may be used to secure compliance with all or any of the provisions of sub-rule (1) or (2).

7. *Persons remanded by Court to, and those detained in, Receiving Centres to be kept separate.*—A person received in a Receiving Centre on remand by a Court shall, in such Centre, as far as possible, be kept apart from persons undergoing a term of detention and shall be allowed all reasonable facilities in connection with the hearing of his case.

8. *Persons received in Receiving Centres and Certified Institutions to be kept apart from other inmates.*—Every person received in a Receiving Centre or Certified Institution shall be kept apart from other persons in such Centre or Institution, unless the officer-in-charge or superintendent, as the case may be, is satisfied on a medical report that it is unnecessary to do so.

9. *Articles found on search and inspection to be entered in register.*—(1) In every Receiving Centre and Certified Institution a register of money, valuables and other articles found with or on persons received therein shall be maintained.

(2) On a person being received in such Centre or Institution, the money, valuables and other articles found with or on him on search and inspection under section 16 and taken possession of shall be entered in such register, and the entries relating to him shall be read over to him, and in token of the correctness of such entries his signature taken in the presence of the officer-in-charge or the superintendent, as the case may be.

(3) Entries shall be made in such register showing in respect of every such search—

(*a*) what articles, if any, are respectively destroyed, sold and stored ;

(*b*) in the case of articles sold the amount realised for them ;

(*c*) the return to him of any money, valuables or articles under the provisions of rule 12 ;

(*d*) the payment to him of the amounts mentioned in clause (*b*).

(4) All entries in such register shall be attested by the officer-in-charge or superintendent, as the case may be.

10. *Disposal of property.*—The property other than money or valuables belonging to a person received or detained in a Receiving Centre or Certified Institution not being a person kept in such Centre under rule 4, shall be disposed of as follows, namely :—

(*a*) if it consists of obscene pictures or literature, tobacco, snuff, opium, any drug or liquor, or perishable articles of trivial value, it shall be destroyed ;

(*b*) if it consists of perishable articles of more than trivial value, it shall be sold by auction as soon as possible and the proceeds kept in safe custody by the officer-in-charge or superintendent, as the case may be ;

(*c*) the clothing, bedding or other articles of such person shall be destroyed if the officer-in-charge or the superintendent, as the case may be, considers it essential on hygienic grounds or considers them to be worthless, or if the clothing and bedding is ragged ; and the clothing, bedding and other articles of persons found to be suffering from any infectious or contagious disease shall be burnt ;

(*d*) clothing, bedding and other articles not covered by the provisions of sub-rules (*a*), (*b*) and (*c*) shall, after being washed and disinfected, if necessary be made up into a bundle or bundles and suitably stored. The officer-in-charge or the superintendent, as the case may be, shall be responsible for their safe custody.

11. *Staff not to buy articles auctioned.*—No person on the staff of a Receiving Centre or Certified Institution shall, whether directly or indirectly, bid at the auction of, or purchase, any property auctioned under these rules.

12. *Disposal of property after passing of Court's order.*—(1) On a court making an order other than an order of detention in respect of any person, his money and valuables and such of his articles as are not destroyed or disposed of, together with the proceeds of such of his articles as have been sold, shall at the time of his release be handed over to him in the presence of the officer-in-charge or the superintendent, as the case may be, and such officer-in-charge or superintendent shall take his signature or thumb impression in the column provided for the purpose in the register maintained under rule 9, in token of his having received such money, valuables, articles and proceeds.

(2) (*a*) On an order of detention being made by a Court in respect of any person, the officer-in-charge or the superintendent, as the case may be, shall order such person's money and valuables and his clothing, bedding and other articles if any stored under clause (*d*) of rule 10 together with the sale proceeds realised under clause (*b*) of rule 10 to be kept in safe custody and handed over to him at the time of his release.

(*b*) Any property, valuables or money belonging to such person, may with his consent and with the approval of the superintendent, be delivered to his friends or relatives at any time during the period of his detention ; or the same may be sold and the sale-proceeds disposed of in such manner as the person may desire.

(*c*) When such person is transferred from one Certified Institution to another, all his property, valuables and money in the custody of the superintendent shall be sent along with him to the superintendent of the Certified Institution to which he has been transferred together with a full and correct statement of the description and estimated value thereof.

(*d*) At the time of the release of such person, the property, valuables or money kept in safe custody shall be handed over to him and an entry made in that behalf in the register maintained under rule 9. Such entry shall be signed by the superintendent.

13. *Persons detained in Certified Institution forbidden to do certain acts.*—A person detained in a Certified Institution shall not :—

(i) refuse to receive any training arranged or ordered for him or to do the work allotted to him ;

(ii) manufacture any article without the knowledge or permission of the officers-in-charge of the various industries ;

(iii) misbehave or quarrel with any other inmate ;

(iv) omit to assist in the maintenance of discipline or to give assistance to an officer when called upon to do so ;

(v) do or omit to do any act with intent to cause to himself any illness, injury or disability ;

(vi) answer untruthfully any question or refuse to give a true account of his movements ;

(vii) cause any disturbance or violence or omit to assist in suppressing any disturbance ;

(viii) do any act or use any language calculated to hurt or offend the feelings and prejudices of a fellow inmate ;

(ix) commit a nuisance or any act of indecency in any part of the institution or refuse to obey any orders issued for proper sanitation;

(x) disobey any order regulating the cleanliness of his person, clothing, bedding, utensils or any other articles;

(xi) secrete any article whatsoever or damage any part of the kit of any other inmate or any property or implements of the institution;

(xii) refuse to eat food prescribed by the diet scale or wilfully destroy any food or render it unpalatable or unwholesome;

(xiii) leave without permission the working party to which he is assigned or the part of the premises or grounds in or at which he may be required to be present at any particular time;

(xiv) receive or possess or partake of any of the prohibited articles mentioned in rule 14;

(xv) resist or obstruct an officer in the execution of his duty or refuse or omit to obey any lawful order of an officer or refuse to perform or omit to perform work or duties in the manner indicated for that purpose.

14. *Prohibited articles.*—(1) No person shall except with the permission of the officer-in-charge or superintendent, as the case may be, or a medical officer, take into a Receiving Centre or Certified Institution a prohibited article.

(2) The following shall be prohibited articles, namely:—

(i) Alcohol and spirit of every description.
(ii) Bhang, Ganja and opium.
(iii) Betel.
(iv) Drugs of every description.
(v) Matches and materials for producing fire.
(vi) Implements of gambling.
(vii) Any implements capable of causing hurt or facilitating escape.
(viii) Snuff and tobacco.
(ix) Any other articles specified in this behalf by the superintendent or the officer-in-charge, by a special order.

15. *Poor Fund.*—(1) For every Receiving Centre and Certified Institution there shall be a Poor Fund.

(2) (*a*) All donations and subscriptions made to the Poor Fund shall be acknowledged by written receipts bearing serial numbers.

(*b*) The officer-in-charge or the superintendent shall, in consultation with the Visiting Committee, deposit all money collected for the Poor Fund, in—

(i) the Imperial Bank of India, or

(ii) a Postal Savings Bank, or

(iii) with the approval of the Chief Inspector, any other bank.

(3) The amount standing to the credit of the Poor Fund shall be spent for the following purposes namely:—

(i) to meet contingent expenses in connection with the collection of the fund; and

(ii) to provide for the welfare and comfort of the destitutes who are inmates of, or have been released on license from, the Centre or Institution, as the case may be.

(4) The officer-in-charge or the superintendent may in consultation with the Visiting Committee, subject to the requirements of sub-rule (3), spend sums out of the Poor Fund on objects previously determined by the Visiting Committee :

Provided that no amount exceeding Rs. 25 shall be spent without the previous sanction of the Chief Inspector.

(5) The fund shall be operated on by the officer-in-charge or the superintendent as the controlling and disbursing officer, and he will be responsible for the proper maintenance of the accounts of the fund.

(6) The following books shall be maintained separately in connection with the fund :—

1. Cash Book.
2. Order Book.

(7) The accounts of the fund shall be audited at the time of the annual audit of the accounts of the Receiving Centre or the Certified Institution to which it relates.

16. *The Visiting Committee.*—(1) A Visiting Committee appointed under section 12 shall consist of twelve members of whom seven including the Chairman shall be officials and five shall be non-officials.

(2) The superintendent or the officer-in-charge, as the case may be, and such six other officers including the Chairman as the State Government may from time to time appoint in this behalf, shall be the ex-officio members. In the absence of the Chairman, the senior most official member present shall act as Chairman.

(3) The non-official members, of whom, in the case of a Visiting Committee appointed for a Receiving Centre or Certified Institution intended for female beggars, not less than two shall be lady visitors, shall be nominated by the State Government.

(4) Non-official members shall hold office for a period of one year from the date of appointment and for such further period, if any, as the State Government may by general or special order direct in that behalf.

(5) The tenure of appointment of a non-official member may be terminated by the State Government at any time without assigning any reason.

(6) A non-official member shall be eligible for renomination on the expiry of his term of office.

(7) Any casual vacancy among the non-official members shall be filled by nomination of another non-official who shall hold office so long as the person in whose place he is nominated would have held it if the vacancy had not occurred.

(8) Non-official members shall not be entitled to any travelling, daily or conveyance allowances for their visits to the Centre or Institution.

17. *Duties of Visiting Committee.*—(1) It shall be the duty of members of a Visiting Committee appointed for a Receiving Centre or Certified Institution maintained by Government—

(*a*) to visit such Centre or Institution, as the case may be, once a month according to a rota which shall be drawn up by the Chairman after consulting the members ;

(*b*) to attend quarterly meetings which shall be held in the months of January, April, July and October ;

(*c*) to inspect all parts of the Centre or Institution and see every inmate remanded or detained therein.

(2) It shall be the duty of such Visiting Committee—

(*a*) to satisfy itself that necessary measures for discipline, employment, teaching of industries and medical-care are being taken ;

(*b*) to give every inmate an opportunity of making applications and complaints to it and to enquire into the same ;

(*c*) to inspect the accounts and other registers and the records of inmates ;

(*d*) to recommend to the Chief Inspector the release on license in accordance with section 20 of the Act of persons detained in the Certified Institution ;

(*e*) to recommend to the Chief Inspector the names of Societies and responsible persons willing to take charge of or provide work for persons so released ;

(*f*) to ascertain and communicate to the Chief Inspector whether any person recommended for release is willing to be placed in the charge of or work for any such society or responsible persons ;

(*g*) to consider any other matter connected with the progress of the Centre or Institution, as the case may be, and the welfare of the inmates in general or in particular.

(3) Five members shall form a quorum for the purpose of the meetings specified in clause (*b*) of sub-rule (1).

18. *Visiting Committee for Receiving Centre or Certified Institution not maintained by Government.*—The duties of a Visiting Committee appointed for a Receiving Centre or Certified Institution not maintained by Government shall subject to the terms of any agreement, entered into by Government in respect thereof, be as prescribed by rule 17.

19. *Visiting Committee Book.*—(1) At every Receiving Centre and Certified Institution, besides a general Visit Book there shall be kept a separate Visiting Committee Book, in which shall be recorded the minutes of the proceedings of each meeting of the Committee and wherein members of the Visiting Committee shall also record the dates of their visits, with any remarks or suggestions they may have to make.

(2) A copy of the proceedings of each meeting and of all such remarks shall be sent to the Chief Inspector with such remarks as the officer-in-charge or the superintendent may desire to offer in explanation or otherwise and thereupon the Chief Inspector shall pass such orders as he thinks necessary and the officer-in-charge or the superintendent shall send a copy of such orders to the members concerned.

20. A local authority which has agreed to pay any sum under sub-section (*1*) of section 14 shall pay it to the State Government not later than the 30th day of the month following the quarter to which the payment pertains.

Explanation.—" Quarter " for the purposes of this rule means a quarter of a financial year.

21. *Transfer from one Receiving Centre or Certified Institution to another.*—(1) The Chief Inspector may direct that any person detained in a Receiving Centre or Certified Institution shall be transferred to another Receiving Centre or Certified Institution subject to the following conditions, namely :—

(i) every such direction shall be issued with due regard to the accommodation available ;

(ii) no such direction shall be issued except on—

(*a*) a report from the Medical Officer recommending the transfer of such person on medical or hygienic grounds, or

(*b*) a direction given by a court, or

(*c*) a report from an officer-in-charge or a superintendent recommending transfer in the interests of discipline or for other special reasons.

(2) The Chief Inspector shall not direct the transfer of any person to a Receiving Centre or Certified Institution not maintained by Government in contravention of the terms of any agreement entered into by Government in respect of such Centre or Institution.

22. *Release on licence.*—(1) A person detained in a Certified Institution may be released conditionally on license by the Chief Inspector if in his opinion such person has been of good behaviour and is not likely to beg or employ or cause persons to beg or use them for the purposes of begging and will be able to maintain himself and his dependents by honest means and satisfies the following conditions, namely :—

(*a*) in case he is undergoing detention for the first time he has resided in the Certified Institution for not less than one-third of the term of his detention, and in any other case he has resided in the Certified Institution for not less than two-thirds of the term of detention ;

(*b*) during one month immediately preceding the date of release in the case of a first detention, three such months in the case of detention for the second time and six such months in the case of any subsequent detention, he must not have been awarded any disciplinary punishment for breach of rules, other than that specified in clauses (*i*) and (*ii*) of rule 25 :

Provided that the Chief Inspector may in special cases, for reasons to be recorded in writing, relax the provisions of clauses (*a*) and (*b*).

(2) The Superintendent shall give timely intimation of the probable date of an inmate's release from the Institution to his relative and invite the relative to come to the Institution on that date and take charge of the inmate. If the relative takes charge of the inmate accordingly actual expenses of the journey undertaken by the relative both ways and of the inmate's return journey shall be paid by the Superintendent to the relative at the time of the inmate's release. If the relative does not come to take charge of the inmate, the inmate shall be taken to his native place by a guard from the Institution.

23. *Daily routine in Certified Institution.*—(1) At dawn the inmates of a Certified Institution shall be marched off to perform their ablutions and a reasonable time shall be allowed for the performance of hygienic duties.

(2) The inmates shall be employed first in cleaning the dormitories, compound and other parts of the Certified Institution ; thereafter the inmates shall attend to their respective duties, such as carpentry, weaving, etc.

(3) All inmates provided they are medically fit shall ordinarily be required to work for 8 hours on every working day. Exemption from work or reduction in the hours of work may be granted by the superintendent on the recommendation of the Medical Officer for reasons to be recorded in writing.

(4) The details of the daily routine and employment of the inmates during the various hours of the day shall be fixed by the Superintendent with the approval of the Chief Inspector, who shall have power to make changes therein from time to time, if necessary. The approved time table in this behalf shall be displayed on the notice board of the Certified Institution.

24. *Grade system and Gratuities.*—(1) With a view to encouraging steady behaviour and application to the training provided, the following grade system may be employed in a Certified Institution, namely :—

(*a*) *Head Mukadam's grade.*—Not more than one person from among 10 Mukadams, of exceptionally good conduct shall be promoted as a Head Mukadam.

(*b*) *Mukadam's Grade.*—At the head of every working party consisting of 20 inmates there shall be one Mukadam selected from among the inmates who have settled down to the institutional life and whose conduct and progress have been satisfactory.

(2) Promotion or reduction in grade shall be made by the superintendent.

(3) An inmate who shows satisfactory progress in the training provided for him may be paid a gratuity not exceeding Rs. 2 per mensem.

(4) The amount earned by way of gratuities by inmates shall be kept with the Superintendent who shall deposit the total amount in a Savings Bank approved by the Chief Inspector, and keep a separate ledger for each inmate. An inmate may spend out of the balance at his credit such amount and on such articles as the Superintendent may consider to be reasonable ; on the release of an inmate the balance, if any, left in his account shall be handed over to him and the ledger closed.

25. *Penalties.*—If a person commits a breach of any of the provisions of rule 13, he shall be liable to any one or more of the following penalties which may be imposed by the Superintendent who shall record all such disciplinary measures in a register provided for the purpose :—

(i) Formal warning personally addressed to the inmate by the Superintendent.

(ii) Forfeiture of privileges, if any.

(iii) Degradation in grade, if any.

(iv) Confinement in the lockup for a period not exceeding 3 days.

(v) Imposition of hand cuffs, except in the case of a female.

(vi) Solitary confinement not exceeding 10 days at a time.

(vii) Penal diet for periods not exceeding three days at a time with intervals of not less than 12 days between every two such periods :

Provided that the penalty specified in clause (*i*) shall not be combined with any penalty other than that specified in clause (*ii*), and the penalties specified in clauses (*v*) and (*vii*) shall not be carried out in combination even when awarded at different times and for different offences.

26. *Report of certain cases to Chief Inspector.*—The Superintendent shall report to the Chief Inspector for the purposes of section 18 the case of any person detained in a Certified Institution who habitually and wilfully disobeys or neglects to comply with the provisions of rule 13.

27. *Conditions for release on license.*—A person detained in a Certified Institution shall not be released on license by the Chief Inspector under sub-section (*1*) of section 20 except on the conditions specified in Form D.

FORM A.

(*See* rule 3.)

No.

Name

Address

is permitted to solicit or receive money / food / gifts .

for the purpose of

at the following places

within the following areas

during the period commencing on the and ending on the subject to the following conditions :—

(i) This permit shall be carried by the holder when collecting alms and on demand by any police officer, produced for inspection. It shall not be transferable.

(ii) The collection shall be used only for the purpose mentioned above.

(iii) The manner of the collection shall be as under :—

(iv) This permit shall be liable to cancellation for the breach of any of its conditions.

Given under my hand and seal this day of 195 .

Commissioner of Police, Bombay.
District Magistrate of

FORM B.

[*See* rule 6 (2).]

MEDICAL EXAMINATION SLIP.
CLEARING HOUSE, WORLI.

Name (full) Age

No. Detained Sex. Wt. Ht.

Identification marks

General state of health

Fit for work at Institution.

Remarks.

Date

Medical Officer.

FORM C.

Form of Medical Examination.

[*See* rule 6 (2).]

Name of the Receiving Centre
Admission No.

(A) Name in full Married or single
Caste Age Sex
Identification marks
Date of admission in the Receiving Centre
Weight Height
General state of health, bodily condition and previous history
For which kind of work if any, he/she is fit
(B) *Result of medical examination*—

1. Eye.
2. Mouth.
3. Teeth.
4. Nose.
5. Throat.
6. Ear.
7. Heart.
8. Lungs.
9. Liver.
10. Spleen.
11. Skin.
12. Blood test, if any.
13. Mentality.
14. Urine test, if any.
15. Deformities, if any.
16. Special remarks, if any, including those on contagious or infectious diseases or nervous system.
17. Injuries or marks of violence, if any.

Diagnosis—

1. Whether suffering from contagious leprosy or other communicable infectious diseases.
2. Whether an idiot or of unsound mind.
3. Other diseases, if any.

Remarks about treatment or action proposed.

Medical Officer.

FORM D.

(*See* rule 27.)

Form of order of release on license.

I, , Chief Inspector of Certified Institutions, State of Bombay, do by this licence permit
caste , residence , number
who was ordered to be detained in a Certified Institution by the
Court at under section of the Bombay Beggars Act, 1945 (Bom. XXIII of 1945), for a term of on the day of 19 , and who is now detained in the*
at to be released from the said Institution for the remaining portion of the aforesaid period of detention.

---

* Here specify name of Certified Institution.

This license is granted subject to the conditions endorsed hereon, upon the breach of any of which, it shall be liable to be revoked.

Given under my hand and seal this day of 19 .

Chief Inspector of Certified Institutions,
State of Bombay, Poona.

Conditions.

1. The licensee shall proceed to and reside there, and may, with the consent of the Chief Inspector, reside at any place until the expiry of the period of $\frac{\text{his}}{\text{her}}$ detention unless $\frac{\text{he}}{\text{she}}$ is released unconditionally or the license is revoked earlier.

2. The licensee shall find regular employment within a period of one month from the date of $\frac{\text{his}}{\text{her}}$ release and shall obey such instructions as $\frac{\text{he}}{\text{she}}$ may receive from the Chief Inspector with regard to punctual and regular attendance at employment or otherwise.

3. The licensee shall abstain from begging or employing or causing persons to beg, or using them for the purpose of begging.

4. The licensee shall lead a sober and industrious life to the satisfaction of the Chief Inspector.

5. In the event of $\frac{\text{his}}{\text{her}}$ committing a breach of any of the above conditions the license shall be revoked and thereupon the licensee shall be liable to be detained in a Certified Institution till the expiry of the term for which $\frac{\text{he}}{\text{she}}$ had been ordered to be detained by the Court.

6. The Chief Inspector shall be the sole Judge as to whether a breach of any condition of this license has taken place.

I hereby acknowledge that I am fully aware of the above conditions which have been $\frac{\text{read over}}{\text{explained}}$ to me and that I accept the same.

Signature or mark of the licensee.

Certified that the conditions specified in the above order have been $\frac{\text{read over}}{\text{explained}}$ to (name) and that the licensee has accepted them and that $\frac{\text{he}}{\text{she}}$ has been released accordingly, on the

19 .

Signature of the Superintendent.

THE BOMBAY SALES TAX ACT, 1946 (BOM. V OF 1946).

G. N., F. D., No. 6495/33-(iii), dated 28th March 1949 (B. G., Pt. IV-A, p. 338). S. 6 (1)

Amended by G. N., F. D., No. 6495/33 (ii), dated 1st May 1949.
Amended by G. N., F. D., No. 6495/33 (ii), dated 25th June 1949.
Amended by G. N., F. D., No. 6495/33 (ii), dated 30th July 1949.

In exercise of the powers conferred by the proviso to sub-section (*1*) of section 6 of the Bombay Sales Tax Act, 1946 (Bom. V of 1946), (hereinafter referred to as the said Act), the Government of Bombay is pleased to direct that the general tax and the special tax payable by a dealer on his taxable turnover in respect of sales or supplies of goods specified in column 1 of Schedule I hereto which within the prescribed time and subject to the prescribed terms and conditions hereto are despatched or removed by him or on his behalf or by the purchaser of such goods to any place outside the Province specified in Schedule II hereto shall be levied at the rate specified in column 2 of the said Schedule I.

SCHEDULE I.

Part I.

Goods.	Rate of General tax.
1	2
1. All goods other than— (i) goods specified in Schedule I to the said Act. (ii) bullion and specie, and (iii) goods, the sales or supplies of which are declared from time to time under section 7 of the said Act as sales or supplies on which the tax is not payable.	One quarter of an anna in the rupee.
2. Bullion and specie	One-eighth per cent.

Part II.

Goods.	Rate of Special tax.
1	2
3. Goods specified in Schedule I to the said Act excluding goods specified in entry 22 thereof.	One-half of an anna in the rupee.
4. Goods specified in entry 22 of Schedule I to the said Act (i.e. all fabrics containing any material of gold, silver or gilded metal whether knitted, woven or embroidered; and thread, *zari*, or other embroidery materials of gold, silver or gilded metal).	One quarter of an anna in the rupee.

SCHEDULE II.

Names of territories.

1. Any place in the Dominion of India other than the territories comprised in the following Indian States, namely :—

Akalkot.	Savantwadi.	Jambughoda.	Sachin.
Aundh.	Wadi Jagir.	Jawhar.	Sanjeli.
Bhor.	Janjira State.	Katosan.	Sant.
Jamkhandi.	Ambaliare.	Khadal.	Sudasna.
Jath.	Balasinor.	Lunawada.	Surgana.
Kurundwad (Senior).	Bansda.	Malpur.	Tharad.
Kurundwad (Junior).	Baria.	Mansa.	Velasna.
Miraj (Senior).	Bhaderva.	Mohanpur.	Varsoda.
Miraj (Junior).	Cambay.	Palanpur.	Vasna.
Mudhol.	Chota Udepur.	Punadra.	Vijayanagar.
Phaltan.	Dharampur.	Radhanpur.	Wao.
Ramdurg.	Ghodasar.	Rajpipla (including Sogbara).	Danta State.
Sangli.	Idar.	Ranasan.	Kolhapur State.
Savanur.	Ilol.		Baroda State.

2. Any place in the French territories of—
(i) Pondichery ; (ii) Mahe ; (iii) Chandranagore ; (iv) Karikal ; (v) Yanaon.

3. Any place in the Portuguese territories of—
(i) Goa ; (ii) Daman ; (iii) Diu.

S. 7(2) **G. N., F. D., No. 6495/33-S.O., dated 2nd December 1946.**

In exercise of the powers conferred by sub-section (*2*) of section 7 of the Bombay Sales Tax Act, 1946 (Bom. V of 1946), the Government of Bombay is pleased to add to the Schedule to the said Act, the following goods with effect from 1st December 1946, namely :—

In column 1 of the Schedule to the said Act, the following shall be added :—

(50) Betel leaves.

(51) Groundnuts, Kardi (safflower) seed and Til (sesamum) seed.

(52) Cloth woven on handlooms exclusively out of handspun woollen yarn.

(53) Goods obtained from the Canteen Stores Department of the Government of India and sold by Canteen Contractors certified by that Department, to members of the Armed Forces of the Union or of Allied Forces at prices fixed by the said Government.

S. 7(2) **G. N., F. D., No. 7069/33-ST. (1), dated 28th January 1950 (B. G., Pt. I, p. 548).**

In exercise of the powers conferred by sub-section (*2*) of section 7 of the Bombay Sales Tax Act, 1946 (Bom. V of 1946), the Government of Bombay is pleased to enlarge, with effect on and from the 24th January 1950, entry 43 in Schedule II to the said Act as follows, namely :—

In the said entry, after the word " Newspapers " the following shall be inserted, namely :—

" including any journal, magazine or other periodical publication containing advertisements in respect of which a newspaper advertisement tax is levied under Part VII of the Bombay Finance Act, 1932 (Bom. II of 1932)".

S. 7(2) **G. N., F. D., No. 7069/33/66290-ST., dated 23rd March 1950 (B. G., Pt. I, p. 1673).**

In exercise of the powers conferred by sub-section (*2*) of section 7 of the Bombay Sales Tax Act, 1946 (Bom. V of 1946), the Government of Bombay is pleased to enlarge, with effect on and from the 15th March 1950, entry 30 in Schedule II to the said Act as follows, namely :—

For the said entry, the following shall be substituted, namely :—

" Turmeric and Turmeric powder ".

S. 7(2) **G. N., F. D., No. 7069/33-ST., dated 1st April 1950 (B. G., Pt. I, p. 1834).**

In exercise of the powers conferred by sub-section (*2*) of section 7 of the Bombay Sales Tax Act, 1946 (Bom. V of 1946), the Government of Bombay is pleased to add

to Schedule II to the said Act, the following goods, with effect on and from the 1st April 1950, namely :—

In column 1 of Schedule II to the said Act, the following shall be added :—

55. Vegetable seeds.
56. Bunker Coal.
57. Raw silk, and silk and art silk yarn.
58. Raw wool, wool tops, woollen yarn (other than knitting yarn) and wool-waste.
59. Cloth of any kind woven on handlooms and sold at a rate not exceeding rupees two per yard.
60. Clothes and other articles of *Khaddar*, sold by dealers recognised for this purpose by the Commissioner of Sales Tax.

G. N., F. D., No. 6513/33-S.O., dated 2nd April 1946 (B. G. Extra, Pt. IV-B, p. 22). **S. 29 Bombay Sales Tax Tribunal Rules, 1946.**

In exercise of the powers conferred by section 29 of the Bombay Sales Tax Act, 1946 (Bom. V of 1946), the Government of Bombay is hereby pleased to make the following rules :—

1. These rules may be called the Bombay Sales Tax Tribunal Rules, 1946.

2. In these rules, unless there is anything repugnant in the subject or context—

(*a*) " member " means member of the Tribunal and includes the President thereof ;

(*b*) " non-official " means a person who at the date of his appointment does not hold any office of profit under the Government of India or the Government of any State ;

(*c*) " Registered Accountant " means a person enrolled as a registered accountant in the Register of Accountants maintained by the Central Government under the Auditors Certificate Rules, 1932.

3. The Tribunal shall consist of a President, and two other members.

4. (1) Except as provided in sub-rule (2) of rule 7, the President shall be a person who has exercised the powers of a District Judge or who possesses such qualifications as are normally required for appointment to the post of District Judge, and who has held Judicial office for a period of not less than ten years.

(2) The other two members shall be non-officials, one of whom shall be a person having business experience and the other shall be a person who has for a period of not less than six years, practised professionally as a Registered Accountant, or who in the opinion of the State Government, possesses adequate qualifications and experience in accounting, which render him suitable for appointment to the Tribunal.

5. (1) The President and the members shall hold office ordinarily for a period of three years.

(2) A person who has held office as a President or member for a period mentioned in sub-rule 1 shall be eligible for reappointment.

(3) The President or a member may at any time resign his office.

6. Notwithstanding anything contained in rule 5, the State Government may terminate at any time the appointment of the President or a member if, in its opinion, such President or member is unable or unfit to continue to perform the duties of his office.

7. (1) If any vacancy occurs by leave of absence, deputation, death, resignation, expiry of the period of appointment or termination of appointment or for any cause whatsoever such vacancy shall be filled by a person qualified for appointment under rule 4.

(2) Until the vacancy in the office of the President is filled under sub-rule (1), the seniormost member shall act as the President.

8. The headquarters of the Tribunal shall be at Bombay.

S. 29
Bombay Sales Tax Rules, 1946.

G. N., F. D., No. 6506/36-SO, dated 28th June 1946 (B. G., Pt. IV-B, p. 86).

Amended by G. N., F. D., No, 6506/33, dated 18th October 1946.

Amended by G. N., F. D., No. 6506/33/39438, dated 20th December 1946.

Amended by G. N., F. D., No. 6506/33/35540, dated 30th December 1946.

Amended by G. N., F. D., No. 6506/33-ST, dated 10th April 1947.

Amended by G. N., F. D., No. 6506/33-ST, dated 30th April 1947.

Amended by G. N., F. D., No. 6506/33/16900-ST, dated 23rd May 1947.

Amended by G. N., F. D., No. 6506/33/16900-ST, dated 31st May 1947.

Amended by G. N., F. D., No. 6506/33/16900-ST, dated 15th September 1947.

Amended by G. N., F. D., No. 6506/33/16900-ST, dated 29th September 1947.

Amended by G. N., F. D., No. 6506/33/16900-ST, dated 25th May 1948.

Amended by G. N., F. D., No. 6506/33/16900-ST, dated 3rd February 1949.

Amended by G. N., F. D., No. 6506/33/16900-ST, dated 31st March 1949.

Amended by G. N., F. D., No. 6506/33/16900-ST, dated 6th May 1949.

Amended by G. N., F. D., No. 6506/33/16900-ST, dated 14th September 1949.

Amended by G. N., F. D., No. 6506/33/16900-ST, dated 5th October 1949.

Amended by G. N., F. D., No. 6506/33/16900-ST, dated 17th November 1949.

Amended by G. N., F. D., No. 6506/33/57872-ST, dated 4th January 1950.

Amended by G. N., F. D., No. 6506/33/64883-ST, dated 1st April 1950.

Amended by G. N., F. D., No. 6506/33-ST, dated 1st April 1950.

Amended by G. N., F. D., No. 6506/33-ST, dated 29th April 1950.

Amended by G. N., F. D., No. 6506/33/2396-ST, dated 7th June 1950.

In exercise of the powers conferred by section 29 of the Bombay Sales Tax Act, 1946 (Bom. V of 1946), the Government of Bombay is pleased to make the following rules :—

CHAPTER I.

Short Title and Definitions.

1. *Short title.*—These rules may be called the Bombay Sales Tax Rules, 1946.

2. *Definitions.*—In these rules, unless there is anything repugnant in the subject or context,—

(*a*) "agent" means a person authorised by a dealer in writing to appear on his behalf before any Sales Tax authority;

(*b*) "chief place of business" means in relation to a dealer in any area within the jurisdiction of a Sales Tax Officer, the place of business mentioned as his chief place of business in the certificate of registration granted under rule 7;

(*c*) "Commissioner" includes any officer to whom the Commissioner under the provisions of section 16 delegates his powers and duties;

(*d*) "Form" means a form appended to these rules;

(*e*) "Government treasury" means in relation to a dealer registered within the jurisdiction of any Sales Tax Officer, the treasury or sub-treasury as the case may be of the district or taluka where the dealer's place of business or, if he has more than one such place, where his chief place of business, within that jurisdiction is situated, and in relation to a dealer registered in the City of Bombay or the Bombay Suburban District, the Reserve Bank of India, Bombay;

(*f*) "place of business" means any place where a dealer sells any goods or keeps accounts of sales;

(*g*) "Quarter" means a quarter ending on the 31st March, 30th June, 30th September or 31st December;

(*h*) "Sales Tax Officer" means in respect of any place of business of a dealer, the Sales Tax Officer includes a Sales Tax Officer (Junior), appointed as such with jurisdiction within the area in which such place of business is situated, by the State Government under section 3 to assist the Commissioner;

(*i*) "section" means a section of the Act;

(*j*) "the Act" means the Bombay Sales Tax Act, 1946; and

(*k*) "warehouse" means any enclosure, building or vessel in which a dealer keeps a stock of goods for sale.

CHAPTER II.

Sales Tax Authorities.

3. *Appointments.*—(1) The State Government may appoint, under section 3, to assist the Commissioner, the following classes of Sales Tax authorities, with jurisdiction over specified areas, namely :—

(*a*) Deputy Commissioner of Sales Tax;

(*b*) Assistant Commissioner of Sale Tax;

(*c*) Sales Tax Officer;

(*cc*) Sales Tax Officer (Junior);

(*d*) Inspector of Sales Tax.

(2) The Inspector of an area shall be subordinate to the Sales Tax Officer exercising jurisdiction therein. The Sales Tax Officer, shall in all matters arising within the area in respect of which he exercises jurisdiction be subordinate to the Assistant Commissioner exercising jurisdiction over such area.

(3) All such Inspectors, Sales Tax Officers and Assistant Commissioners shall be subordinate to the Deputy Commissioner and the Commissioner, and the Deputy Commissioner shall be subordinate to the Commissioner.

CHAPTER III.

Calculation of Taxable Turnover.

4. [*Deleted.*]

5. [*Deleted.*]

5A. *Exemption of certain sales in calculating taxable turnover.*—(1) In calculating the taxable turnover of a dealer, the turnover on the following sales may be deducted from his gross turnover :—

(*i*) [*Deleted.*]

(*ii*) [*Deleted.*]

(*iii*) [*Deleted.*]

(*iv*) [*Deleted.*]

(*v*) Sales of Ceylon Cocoanut oil and Copra to the Civil Supplies Department of the Government of Bombay ;

(*vi*) Sales to the Electrical Commissioner with the Government of Bombay, or to an Officer authorised by him for this purpose, of goods intended for use in the generation, transmission and distribution of electricity and specified in a certificate issued in this behalf by the Commissioner of Sales Tax ;

(*vii*) Sales of goods intended for use in the transmission and distribution of electrical energy to an electrical undertaking registered under the Act ;

(*viii*) Subject to the conditions specified in sub-rule (2) sales or supplies of goods which are despatched or removed by him or on his behalf or by the purchaser of such goods within three months from the date of sale or supply to any place outside India other than the French territories of Pondicherry, Mahe, Chanderanagore, Karikal and Yanaon, and the Portuguese territories of Goa, Daman and Dieu :

Provided that the Commissioner may, if satisfied that the goods could not be despatched or removed within the period of three months due to any circumstances beyond the control of the parties, extend the period in any particular case by a further period not exceeding three months ;

(*ix*) Sales or supplies of goods to a dealer holding an authorisation in Form 1-C granted under rule 5AA ;

(*x*) Sales to a person carrying on the business of bleaching, dyeing or printing cloth or yarn on behalf of the registered dealers, of goods intended for use in the process of bleaching, dyeing or printing such cloth or yarn and specified in an authorisation granted in this behalf by the Commissioner :

Provided that such authorisation shall be subject to such conditions as the Commissioner may determine and may be modified, suspended, revoked or cancelled at any time if the Commissioner deems fit for reasons recorded in writing ;

(*xi*) Sales of edible oils manufactured in *ghanis* by human or animal agency—

(1) effected by such owners of *ghanis* as have been granted certificates by the Commissioner that the owners are persons engaged in the business of manufacturing edible oils by human or animal agency ;

(2) effected by such co-operative societies formed by the owners of *ghanis* as have been granted certificates by the Commissioner that they are engaged in the business of selling such edible oils :

Provided that such certificates shall be granted subject to such conditions as the State Government may by general or special order direct and shall be valid for one year from the date of issue, and may be renewed from time to time for a period not exceeding one year :

Provided further that such certificates shall be liable to cancellation if any of the conditions prescribed by the general or special order of the State Government is not complied with ;

(*xii*) Sales of cotton cloth in respect of which the buyer furnishes the dealer with a certificate from the Textile Commissioner, Bombay, that the cloth is intended for export to Nepal, Sikkim, Bhutan or Tibet, and has, within a period of three months from the date of sales, been despatched from a place in the State of Bombay to a suitable railway station, outside the State of Bombay for transport by means of mules or other animals to Nepal, Sikkim, Bhutan or Tibet.

(2) The conditions for the purpose of clause (*viii*) of sub-rule (1) shall be as follows, namely :—

(*i*) the goods shall be consigned from a place within the State of Bombay directly to a place outside India other than the French territories of Pondicherry, Mahe, Chandranagore, Karikal and Yanaon, and the Portuguese territories of Goa, Daman and Dieu through a railway shipping or aircraft company or public motor transport service, or by a registered parcel post ;

(*ii*) the dealer shall maintain a register of the goods so consigned by him, showing the date of the sale, number of bill or invoice, date and place of despatch, mode of despatch, name of the ship or vessel, number of railway receipt or other document, destination, name of consignee and a brief description of the goods ; and

(*iii*) the purchaser of goods who has so consigned the goods shall furnish the dealer with the necessary particulars and relevant receipts showing such consignment within one month of the date of despatch.

Explanation.—For the purposes of sub-rule (2) the goods consigned through a railway, shipping or aircraft company or public motor transport service shall not include goods carried as personal luggage through such company or service.

5AA. *Authorisation to dealers dealing in certain goods.*—(1) Any dealer who manufactures such goods as may be specified by the State Government by notification in the *Official Gazette* in this behalf with or without the use of power and whose gross turnover in any financial year in respect of such goods does not exceed Rs. 10,000, may make an application in Form 1-B for the grant of an authorisation to the Commissioner.

(2) On receipt of an application under sub-rule (1) and after making such inquiry as he deems necessary for verifying the statements made in the application, the Commissioner may grant to the applicant an authorization in Form 1-C containing such terms and conditions as may be specified therein.

(3) An authorisation granted under sub-rule (2) shall remain in force from the date of issue to the 31st day of March next following. It shall be renewable for a period not exceeding one year at a time.

(4) The Commissioner may at any time revoke, suspend or cancel such authorisation if the holder thereof commits a breach of any of the provisions of the Act or these rules or of any condition specified in the authorisation.

5B. *Goods returned to a dealer.*—The period for return of goods for the purposes of clause (*j*) of section 2 shall be three months.

5C. The goods referred to in the proviso to sub-section (*1*) of section 6 shall be despatched or removed within a period of three months from the date of the sale or supply of such goods and the following terms and conditions shall for the purpose of the said proviso apply, namely :—

(*i*) the purchaser shall be a person carrying on the business of selling or supplying goods at a place within India but outside the State of Bombay, and within the French territories of Pondicherry, Mahe, Chandernagore, Karikal and Yanaon, and the Portuguese territories of Goa, Daman and Dieu and shall furnish the dealer with a certificate in the following form :—

I.....of Messrs.....
(address).....do certify that I/the said firm/company am/is carrying on the business of selling or supplying goods at.....in the State of .....

in India ; and that I have / the said firm/company has purchased

the goods specified in.....No.....
dated.....for

resale at the said place.....

use as raw materials/machinery/engines, fuel or lubricants.

.....

in the manufacture of .....for sale at the said place.

Place ..... Signature .....

Date ..... Status .....

(*ii*) the goods shall be consigned from a place within the State of Bombay through a railway, shipping or aircraft company or public motor transport service or by registered parcel post :

Provided that this condition shall not apply to motor vehicles despatched by road driven by their own power.

(*iii*) the dealer shall maintain a register of the goods so consigned by him showing the date of the sale, the number of bill or invoice, the date and place of despatch, the mode of despatch, name of ship or vessel or number of motor vehicle as the case may be, number of railway receipt or other documents, destination, the name of consignee and a brief description of the goods, and

(*iv*) the purchaser of goods who has so consigned the goods shall furnish the dealer with the necessary particulars and relevant receipts showing such consignment and receipts, if any, in respect of payment of any local tax or octroi within one month of the date of despatch.

Explanation.—For the purposes of this rule the goods consigned through a railway, shipping or aircraft company or public motor transport service shall not include goods carried as personal luggage through such company or service :

Provided that the Commissioner may, if satisfied that the goods could not be despatched or removed within the period of three months specified in this rule due to any circumstances beyond the control of the parties, extend the period in any particular case by a further period not exceeding three months.

5D. *Deductions under proviso to sub-section (3) of section 6.*—The deductions in respect of sales or supplies of goods for the purpose of the proviso to sub-section (*3*) of section 6 shall be made at the following rates, namely :—

In the case of—	
(*a*) Sales or supplies of bullion or specie other than those to which the proviso to sub-section (*1*) of section 6 applies	One-fourth per cent.
(*b*) Sales or supplies of bullion and specie to which the proviso to sub-section (*1*) of section 6 applies ..	One-eight per cent.
(*c*) Sales or supplies of goods other than the goods specified in Schedule I and bullion and specie to which the proviso to sub-section (*1*) of section 6 applies	One-sixty-fifth part.
(*d*) Sales or supplies of goods specified in Schedule I to which the proviso to sub-section (*1*) of section 6 applies.	One-thirty-third part.

CHAPTER IV.

Registration of Dealers.

6. *Application for registration.*—(1) An application for registration under section 8 shall be made in Form II to the Sales Tax Officer within thirty days from the date on which the dealer's turnover from the 1st April preceding first exceeds the limits specified in sub-section (*1*) of section 5. It shall be signed by the proprietor of the business, or, on his behalf, by a partner of the firm or by the principal officer managing the business, and shall be verified in the manner indicated therein.

An application for registration under section 8A shall also be made in Form II, and shall be signed and verified in a similar manner.

(2) A dealer having places of business in the jurisdiction of different Sales Tax Officers shall make a separate application to each such Officer in respect of the place or places of business within his jurisdiction.

7. *Grant of certificate of registration.*—(1) The Sales Tax Officer, if satisfied that the application is in order shall register the dealer and shall issue to him a certificate of registration in Form III, with as many additional copies as he has additional places of business situated within the jurisdiction of such officer and enumerated in the application.

(2) Any dealer may obtain from the Sales Tax Officer a duplicate copy of any registration certificate issued to him and lost, destroyed or defaced.

7A. *Application for registration for the purpose of section 18.*—(1) The period for the purposes of sub-sections (*2*) and (*3*) of section 18 shall be thirty days from the date of the transfer of ownership of part of the business or dissolution of the firm, as the case may be.

(2) An application for obtaining a certificate of registration for the purposes of sub-sections (*2*) and (*3*) of section 18 shall be made not later than fifteen days from the date of transfer of ownership of part of the business or dissolution of the firm, as the case may be.

8. [*Deleted.*]

9. *Exhibition of certificate of registration.*—The appropriate certificate of registration shall be conspicuously displayed by the dealer at each place of his business to which it relates.

10. *Maintenance of list of registered dealers.*—The names of every dealer registered under section 8 or 8A shall be entered in Forms IV and V.

10A. *Declaration under section 16A.*—(1) The declaration under section 16A shall be made in Form V-O and shall be sent to each Sales Tax Officer in whose jurisdiction the dealer has a place of business.

(2) Such declaration shall be made within the period specified below :—

(*a*) In the case of a dealer who was liable to pay the tax on the 1st day of August 1949.	Before the end of October 1949.
(*b*) In the case of a dealer who becomes liable to pay tax under section 5 (*2*) or (*4*) or section 18 (*1*) after the 1st day of August 1949.	Within the period specified in rule 6 (*1*) or section 18 (*1*) as the case may be for making an application for registration or before the end of October 1949, whichever period expires later.
(*c*) In the case of any other dealer registered under the Act.	Within thirty days from the date of issue of the certificate of registration.

11. *Information under section 17 and amendment of certificate of registration.*—(1) Every dealer to whom the provisions of section 17 apply, shall within one month of the occurrence of any of the events mentioned in sub-clauses (*a*), (*b*) and (*c*) of the said section send the information under the said section in writing together with his certificates of registration if any to the Sales Tax Officer having jurisdiction.

(2) When any such dealer dies, his legal representative shall within one month of his death inform the Sales Tax Officer about it in writing.

(3) The Sales Tax Officer shall as soon as possible after an amendment is made in any certificate of registration report the name and address of the registered dealer to whom it was issued, together with a description of the goods in accordance with the amended certificate, and the nature and details of the amendment made, to the Commissioner, and the Commissioner shall transmit the said report as soon as possible to the State Government.

12. *Cancellation of registration under clause (a) of sub-section (6) of section 8.*—(1) When a registration is due to be cancelled under clause (*a*) of sub-section (*6*) of section 8, the Sales Tax Officer should, as soon as possible thereafter

cancel the registration of the dealer with effect from the date of discontinuance or transfer of the business, and report the name, address and registration number of the dealer, and the date of cancellation of his registration to the Commissioner.

(2) [*Deleted.*]

13. *Cancellation of registration under clause (b) of sub-section (6) of section 8.*—When the gross turnover of any registered dealer during each of three consecutive years fails to exceed the limits specified in sub-section (*1*) of section 5, such dealer may apply to the Sales Tax Officer for cancellation of his registration in Form V-A. The Sales Tax Officer shall, on being satisfied that the application is in order, report the name, address and registration number of the dealer to the Commissioner. On receipt of such report, the Commissioner shall, by notification in the *Official Gazette*, publish the name, address and registration number of the dealer and the date from which the cancellation of his registration shall take effect, and the registration shall be deemed to have been cancelled and the liability of the dealer to pay tax shall be deemed to have ceased under sub-section (*3*) of section 5 with effect from that date. Provided that the date so notified shall be the date of expiry of the month following that in which the notification is published.

13A. *Application for cancellation of registration under sub-section (5) of section 8-A.*—An application under sub-section (*5*) of section 8-A shall be made in Form V-A.

14. [*Deleted.*]

15. *Submission of certificate of registration to the Sales Tax Officer for cancellation.*—Within one month of the publication of his name a dealer shall, if he has not already done so under rule 11, return his certificates of registration to the Sales Tax Officer for cancellation ; if a dealer whose name is so published is dead, or dies without returning the certificates of registration, his legal representative shall transmit or deliver the certificates to the Sales Tax Officer within the said period.

16. (1) *Publication of list of registered dealers.*—The State Government shall publish the list of names and addresses of registered dealers and the particulars required by section 9 in the *Official Gazette* in alphabetical order, district by district, in the following form :—

					Goods covered by the dealer's certificate of registration.		
Serial No.	Name and address of the registered dealer.	Location of place or places of business.	Date of registration.	Registration number and mark.	Whether importer,(I) or manufacturer or processor (M)	Classes of goods manufactured or processed.	Remarks.
1	2	3	4	5	6	7	8

(2) The name and address and other particulars of a dealer who is registerde after the date notified under sub-section (*1*) of section 5 shall be published in the *Official Gazette* in the form specified in sub-rule (1) before the expiry of the month following that in which the dealer is registered, or as soon thereafter as possible.

(3) The amendments made in any certificate of registration and the name, address and registration number of any dealer whose registration is cancelled shall be published in the *Official Gazette* as soon as may be after such amendment or cancellation.

(4) The State Government shall publish in the first *Official Gazette* in the August of each subsequent year, or as soon thereafter as possible, the consolidated list mentioned in sub-clause (*b*) of section 9.

CHAPTER V.

Return of Taxable Turnover.

17. *Returns.*—Every registered dealer shall furnish to the Sales Tax Officer quarterly returns in Form VI within one calendar month from the expiry of the quarter to which the return relates ; to each return he shall attach one copy of the receipted chalan in Form X in respect of the Total tax due according to the return :

Provided that when the tax is paid within the jurisdiction of another Sales Tax Officer and the chalan submitted with a return in Form VI furnished in such jurisdiction a statement to that effect shall be submitted in lieu of the chalan.

18. *Submission of returns by unregistered dealers.*—If in the opinion of the Commissioner the annual gross turnover of any dealer other than a registered dealer is likely to have exceeded the limits specified in sub-section (*1*) of section 5 the Commissioner may serve a notice upon him in Form VII requiring him to furnish within one calendar month of the receipt of the notice to the Sales Tax Officer a return in Form VI in respect of such periods not preceding the date of notice by more than eighteen months as may be specified in the notice.

19. *Returns to be signed by the dealer.*—All returns in Form VI shall be signed by the dealer or on his behalf by a partner of the firm or the principal officer managing the business and shall be verified in the manner indicated therein, and shall be submitted to the Sales Tax Officer concerned.

20. *Exemption from the submission of returns.*—(1) If any registered dealer shows to the satisfaction of the Commissioner, that no sales made by him are liable to tax under the Act and makes an application in this behalf, the Commissioner may direct that it shall not be necessary for such dealer to furnish any return in Form VI and may grant the dealer a certificate in Form VIII :

Provided that during the validity of a certificate in Form VIII, if such a dealer makes any sale which is taxable he shall intimate the fact as early as possible to the Sales Tax Officer concerned and shall within a calendar month from the end of the quarter in which he makes any such sale furnish a return in Form VI.

(2) A certificate granted to any dealer under sub-rule (1) shall be valid till the end of the year of issue and thereafter may, on application made by the dealer accompanied by a verified statement that the business continues to be such that no sales effected by him are liable to tax under the Act, from time to time be renewed for one year at a time.

(3) Applications for renewal under sub-rule (2) shall be made at least one month before the date of expiry of the certificate. Applications received thereafter will be liable to be rejected.

(4) Applications for the issue or renewal of certificate in Form VIII shall be made to the Sales Tax Officer concerned and particulars of all such applications shall be entered by him in a register which shall be maintained by him in Form IX.

CHAPTER VI.

Payment of Tax.

21. *Payment of tax.*—Every dealer liable to pay tax under the Act shall pay the tax quarterly. The tax due for any quarter shall be paid before furnishing the return in Form VI for that quarter.

22. *Method of payment.*—(1) Every dealer shall pay the amount due from him in respect of penalty and composition money into the appropriate Government treasury. No payment of any such amount shall be accepted at the office of the Sales Tax Officer or any authority appointed by or under the Act.

(2) Every such payment shall be accompanied by a chalan in Form X. Chalan Forms shall be obtainable at any Government Treasury or at the office of any Sales Tax Officer.

(3) Chalans shall be filled up in triplicate. Two copies of the chalan shall be returned to the dealer duly receipted, of which the "duplicate" shall be attached by him to the return to be submitted to the Sales Tax Officer. The remaining copy shall be retained by the Treasury for being sent to the Audit Office with the monthly accounts.

22-A. *Notice for payment of tax and penalty due under sub-clause (a) of clause (i) and clause (ii) of sub-section 4 of section 12.*—When a dealer has furnished a return under section 10 or a statement under sub-rule (3) of rule 26-A without a receipted copy of the chalan showing full payment of the amount of tax or penalty under sub-section (*3A*) of section 12 payable according to the return, or statement, the Sales Tax Officer shall serve upon the dealer a notice in Form X-A specifying the date by which the amount remaining unpaid must be paid by him.

22-B. *Period for payment of amount into Government treasury under section 12-A (4).*—The amount of tax collected by any person or dealer in contravention of the provision of sub-section (*1*) or (*2*) of section 12-A shall be paid by him into a Government treasury within sixty days from the close of the year in which such amount is collected, or fifteen days from the date of receipt of a notice issued by the Commissioner requiring such person or dealer to pay up such amount, whichever is earlier.

23. *Maintenance by Sales Tax Officer of register showing payment of tax.*—Every Sales Tax Officer shall maintain a register in Form XI in which he shall record the receipt of every chalan produced in proof of payment of tax by dealer for whom he is the Sales Tax Officer.

24. *Maintenance of Progressive Collection Register.*—Every Sales Tax Officer shall maintain a Progressive Collection Register in Form XII showing the payment of sales tax, penalty and composition money by dealers in his jurisdiction.

25. *Submission of statement of receipts to the Sales Tax Officer.*—Every Treasury Officer shall send to the Sales Tax Officer concerned within the first week of each month a statement of the amounts credited in the treasury under the Act during the preceding month.

CHAPTER VII.

Assessment to Tax and Penalty under Section 11.

26. *Claims for deduction from gross turnover under section 6.*—(1) A dealer who wishes to claim deduction from his gross turnover under clause (*i*) of Rule I in sub-section (*3*) of section 6 shall, on demand, produce the relevant documents in support of such claim.

(2) A dealer who wishes to claim a deduction from his gross turnover under clause (*ii*) of Rule I of sub-section (*3*) of section 6 shall, on demand, produce in respect of the sale for which the deduction is claimed the copy or counterfoil of the relevant cash receipt, bill or invoice, if any, and a certificate in writing by the purchasing dealer or by a responsible person duly authorised by the purchasing dealer in this behalf, that the goods in question are required by such dealer either for resale, or for use in the manufacture of goods for sale, or for the packing of such goods.

(3) For purposes of sub-rule (2), the certificate may be in one of the following forms, as may be appropriate, and shall be affixed to the relevant invoice, bill or other document containing a description and value of the goods :—

" (*i*) Certified that these goods are purchased for resale.

Regn. No. .....of .....

Signature .....

Status .....

(Date)

(*ii*) Certified that these goods are purchased for packing of goods to be sold.

Regn. No. .....of .....

Signature .....

Status .....

(Date)

(*iii*) Certified that the goods are purchased for use in the manufacture of goods for sale, and are covered by my/our certificate of registration No..... of .....

Signature .....

Status ....."

(Date)

26-A. *Composition of General tax under sub-section (2) of section 6.*—(1) The Commissioner may, on the application in Form XII-A of any dealer who is required to furnish a return under section 10, if satisfied that his gross turnover during a year is not likely to exceed Rs. 60,000 and that due to the nature of

his business he cannot without undue difficulty maintain an account of each sale made by him, permit such dealer to furnish in lieu of a return in Form VI under section 10, a statement in Form XII-B and to compound the general tax payable by him under clause (*a*) of section 6 (*1*) during any period, by paying a lump sum determined under sub-rules (4) and (5). Provided that when a dealer has once been so permitted, he shall continue to furnish statements in Form XII-B in lieu of the returns in Form VI under section 10 and to pay the lump sum payable in lieu of the general tax under this rule until the permission is withdrawn or cancelled.

(2) The Commissioner may, on an application in Form XII-C made by a dealer to whom permission has been granted under sub-rule (1), for being again assessed for the general tax payable by him in accordance with sub-section (*3*) of section 6, if satisfied that the change is not intended or calculated to affect the assessment of tax under the Act prejudicially, withdraw or cancel such permission. The Commissioner shall also cancel such permission if—

(*a*) the total value of goods purchased by the dealer during any year has exceeded Rs. 55,000 or the gross turnover of the dealer has exceeded Rs. 60,000, or

(*b*) if the dealer has discontinued or transferred his business.

(3) Before a dealer permitted under sub-rule (1) furnishes a statement in Form XII-B, he shall pay into the appropriate treasury, the full amount payable according to such statement and shall attach a copy of the receipted chalan in Form X in respect of the amount so paid.

(4) The lump sum payable in lieu of general tax for any period shall be 1/32, part of the total value of goods purchased by the dealer during that period, after excluding therefrom—

(*a*) any cash discount allowed according to trade practice, in respect of any purchases, or any amount refunded in respect of goods returned, and

(*b*) the purchase price of goods the sales of which could be excluded from the dealer's gross turnover under Rule I in sub-section (*3*) of section 6 to compute his taxable turnover for general-tax,

and adding to the balance ten *per centum* thereof :

Provided that in the case of a dealer who prepares cooked food or beverages for sale or manufactures or processes any goods for sale, the Commissioner may require that a further amount not exceeding 50 per cent. of the value of goods purchased for preparing, manufacturing or processing such goods shall be added to the total value of goods as determined under this sub-rule and the lump sum payable in lieu of general tax shall be calculated accordingly :

Provided further that for purposes of calculating the lump sum payable in respect of the first period for which a dealer furnishes a statement under this rule, the goods held by a dealer in stock at the beginning of the period shall be deemed to have been purchased by him during that period and their value shall be included in the statement in Form XII-B.

(5) The Commissioner shall determine the amount payable by a dealer under this rule for any period of his liability to pay tax as far as may be in accordance with the provisions of sub-sections (*1*), (*1A*) and (*2*) to (*4*) of section 11 as if the statements were returns furnished under section 10.

27. *Assessment to tax.*—The notice required by sub-section (*2*) of section 11 shall be in Form XIII and the date fixed for compliance with the notice shall not be less than 10 days from the date of issue thereof.

28. *Notice under sub-sections (4) and (5) of section 11.*—The Commissioner shall before proceeding to assess a dealer to tax under sub-sections (*4*) and (*5*) of section 11 or to inflict a penalty under the said sub-section (*5*) call upon him by a notice in Form XIV to appear either in person or by an agent and produce such evidence as he may wish to and show cause as to why he should not be so assessed or penalised.

29. *Maintenance of register of cases instituted under section 11.*—The Commissioner shall maintain a register in Form XV, in which he shall enter the details of each case instituted under rule 27 or 28.

30. *Order of assessment.*—After considering the arguments put forward and evidence produced by or on behalf of the dealer, the Commissioner shall assess the amount of tax, if any, and impose the penalty, if any, to be paid by the dealer, and briefly and clearly record the reasons on which he bases his order. The order shall be in Form XVI or Form XVI-A, as may be applicable with suitable modification to cover sales of bullions and specie, if any.

30-A. One certified copy of an order required by a dealer for the purpose of making an appeal or application for revision shall be supplied to him free of charge on his making an application for the certified copy within a period of four months from the date on which the order was made. Such application shall bear a court-fee stamp of the value of annas three only.

31. *Payment of tax.*—(1) If any sum is payable by a dealer under the provisions of sub-section (*4*) of section 12, the Commissioner shall serve a notice in Form XVII as required by that sub-section and shall also fix a date on or before which the dealer shall produce the receipted chalan in proof of payment of such sum.

(2) When the chalan is produced, the Commissioner shall make the necessary entries in the appropriate columns of the register in Form XV.

32. *Recovery of tax from a defaulting dealer.*—If after the date fixed under rule 31, or when the date is extended under the proviso to sub-section (*4*) of section 12, after such extended date, the sum assessed or any part thereof remained unpaid, the Commissioner shall apply to the Collector of the area in which the dealer's place of business in respect of which the assessment has been made, is situated for recovery of the whole amount of the tax and penalty, if any, remaining unpaid as an arrear of land revenue.

33. *Report of recovery of tax by the Collector.*—(1) The Collector shall report to the Sales Tax Officer by the 10th of each month the amounts of tax and penalty recovered during the preceding month.

(2) On receipt of the Collector's report the Sales Tax Officer shall make the necessary entries in the appropriate columns of the register in Form XV.

34. *Assessment case record.*—(1) All papers relevant to the making of any assessment in respect of any particular dealer shall be kept together and shall form an assessment case record.

(2) Assessment case records shall be preserved for 12 years.

(3) Every Sales Tax Officer shall maintain register in Form XVIII showing the progress of the assessment proceedings.

CHAPTER VIII.

Refund of Excess Tax paid by Dealer.

35. *Application for refund.*—An application from a dealer for a refund of excess tax paid shall be made to the Commissioner in Form XIX and shall clearly specify the ground upon which the refund is claimed.

36. *Order sanctioning refund.*—When the Commissioner is satisfied that any refund is due, he shall record an order sanctioning such refund and communicate the order to the applicant.

37. *Refund payment order.*—When an order for refund has been passed under rule 36, the Commissioner shall, if the dealer desires payment in cash, issue to him a Refund Payment Order in Form XX simultaneously forwarding a copy thereof to the Treasury Officer concerned.

38. (1) If the dealer desires payment by adjustment against an amount subsequently payable by him, the Commissioner shall make out a Refund Adjustment Order in Form XXI authorising the dealer to adjust the sum to be refunded against the amount payable by him in respect of the quarter during which the refund is sanctioned or any subsequent quarter.

(2) The Refund Adjustment Order shall be made out in duplicate. One copy shall be issued to the dealer who shall attach the same to his return relating to the period against which the adjustment is desired. The other copy shall be retained by the Commissioner.

39. *Submission of refund adjustment order with Form VI.*—In support of any claim for deduction according to rule 38 the dealer shall attach his copy of the Refund Adjustment Order to his return in Form VI in respect of the quarter next following that in which the refund is sanctioned.

40. *Cancellation of Refund Adjustment Order.*—When the deduction has been allowed the Commissioner shall cancel his own copy as well as the dealer's copy of the Refund Adjustment Order.

41. *Maintenance of register of applications for refund.*—The Commissioner shall enter in the Register maintained in Form XXII particulars of all applications for refund and of the orders passed thereon.

CHAPTER IX.

Inspection of Accounts.

41-A. *Accounts, etc., to be preserved for three years.*—Every registered dealer and a dealer on whom a notice has been served under sub-section (*1*) of section 10 of the Act shall preserve all books of accounts, registers and other documents including bills, cash memoranda, invoices, vouchers and other documents relating to the stocks, purchases, despatches and deliveries of goods for a period of three years after the expiry of the year to which they relate provided that the books of accounts, registers and other documents pertaining to the year ended 31st March 1947 shall be preserved until 30th September 1950.

42. *Production of documents and furnishing information by dealers.*—The Commissioner may, by notice in Form XXIII, require any dealer to produce before him any accounts or documents, or to furnish any information, relating to the stocks of goods of, or purchases, sales and deliveries of goods by, the dealer as may be necessary for purposes of the Act or rules thereunder.

43. *Notice of inspection.*—Unless the Commissioner deems it necessary to make a surprise visit, he shall give reasonable notice in writing to the dealer of his intention to inspect the accounts, registers, documents or stocks of goods of such dealer and in fixing the date, time and place for the purpose, shall, as far as possible, have due regard to the convenience of the dealer.

43-A. *Retention of seized books of accounts, registers and documents.*—If the Commissioner seizes any books of accounts, registers or documents under section 15, he shall not retain them for more than 21 days without recording his reasons in writing for doing so.

CHAPTER X.

Appeals, Revision and Rectification of Mistake.

44. *Appeals.*—(1) An appeal against an order of assessment with or without penalty passed by a Sales Tax Officer under section 11 shall lie—

(*a*) to the Assistant Commissioner if the aggregate amount of the general tax and special tax assessed together with penalty imposed under section 11 (*5*) does not exceed—

(*i*) Rs. 2,500 when the order relates to a period of one quarter,
(*ii*) Rs. 5,000 when the order relates to a period of two quarters,
(*iii*) Rs. 7,500 when the order relates to a period of three quarters,
(*iv*) Rs. 10,000 when the order relates to a period of four quarters or more;

(*b*) to the Commissioner in other cases.

(2) An appeal against any order under this Act other than an order of assessment with or without penalty, passed by a Sales Tax Officer, shall lie to the Assistant Commissioner.

(3) An appeal against an order passed by an Assistant Commissioner shall lie to the Commissioner.

(4) An appeal against an order passed by the Commissioner or Deputy Commissioner shall lie to the Tribunal.

(5) The Commissioner may transfer any appeal or class of appeals to the Deputy Commissioner for disposal on his behalf. The Commissioner may also transfer any appeal from the file of an Assistant Commissioner to any other Assistant Commissioner or to himself or to the Deputy Commissioner. Any appeal transferred under this sub-rule may be again transferred by the Commissioner to himself or the Deputy Commissioner or, if the amount falls within the limits specified in clause (*a*) of sub-rule (1), to an Assistant Commissioner.

45. *Submission of memorandum of appeal.*—(1) Every appeal shall—

(*a*) be in writing,
(*b*) specify the name and address of the appellant,
(*c*) specify the date of the order appealed against,
(*d*) contain a clear statement of the facts,
(*e*) state precisely the relief prayed for, and

(*f*) be signed and verified by the appellant or an agent duly authorised in writing in this behalf by the appellant in the following form, namely :—

"I.....the appellant named in the above memorandum of appeal do hereby declare that what is stated therein is true to the best of my knowledge and belief.

.....
(Signature)"

(2) The memorandum of appeal shall be accompanied by either the order appealed against in original or an authenticated copy thereof unless the omission to produce such order or copy is explained at the time of the presentation of the appeal to the satisfaction of the appellate authority.

(3) An appeal against an order of assessment shall as far as may be possible be in accordance with Form XXIV.

(4) The memorandum of appeal shall either be presented to the appellate officer by the appellant or his agent or sent to him by registered post.

46. *Summary rejection of appeal.*—(1) If the memorandum of appeal does not comply with all the requirements of rule 45, the appeal may be summarily rejected :

Provided that no appeal shall be summarily rejected under this sub-rule unless the appellant is given such opportunity, as the appellate officer thinks fit, to amend such memorandum so as to bring it into conformity with the requirements of rule 45.

(2) An appeal may also be summarily rejected on other grounds which should be reduced to writing by the appellate authority :

Provided that before an order summarily rejecting an appeal under this sub-rule is passed, the appellant shall be given a reasonable opportunity of being heard.

47. *Fixing the date of hearing.*—If the appellate authority does not reject the appeal summarily, it shall fix a date for hearing the appellant or his agent.

48. *Appliction for revision*—(1) No application for revision of any order of assessment with or without penalty, passed in an appeal shall be entertained by any authority unless it is satisfied that the tax with penalty, if any, in respect of which the application is made has been paid.

(2) Where an application for revision is made against an order of assessment either with or without penalty, the application shall as far as may be made in accordance with Form XXV.

49. *Notice to person likely to be affected adversely.*—Before any authority empowered under sections 21 and 22 passes any order in appeal, or revision, likely to affect any person adversely, it shall send to such person a notice in Form XXVI and give him a reasonable opportunity of being heard.

50. *Transmission of copy of order to officer whose order forms subject-matter of appeal or revision.*—A copy of the order passed in appeal or revision shall be sent to the officer whose order forms the subject-matter of the appeal or revision proceedings.

50-A. *Notice for rectification of mistake under section 23A.*—The notice required to be given under the proviso to sub-section (*1*) of section 23A shall be in Form XXIV-A.

CHAPTER XI.

Service of Notice.

51. *Notices.*—(1) Notices under the Act or the rules may be served by any of the following methods :—

(*i*) by delivery to the addressee or his agent, by hand of a copy of the notice

(*ii*) by post :

Provided that if upon an attempt having been made to serve any such notice by any of the abovementioned methods, the Sales Tax authority concerned is satisfied that the dealer is evading the service of notice that for any other reason, the notice cannot be served by any of the above mentioned methods, the said authority shall cause such notice to be served by affixing a copy thereof on some conspicious part of the dealer's office or the building in which the dealer's office is located, and upon some conspicious part of any place of the dealer's business last notified by the dealer, and such service shall be as effectual as if it had been made on the dealer personally.

(2) When the officer serving a notice delivers or tenders a copy of the notice to the dealer personally or to his agent he shall require the signature of the person to whom the copy is so delivered or tendered to an acknowledgment of service endorsed on the original notice. When the notice is served by affixing a copy thereof in accordance with the proviso to sub-rule (1) the officer serving it shall return the original to the sales tax authority which issued the notice with a report endorsed thereon or annexed thereto stating that he so affixed the copy, the circumstances under which he did so and the name and address of the person, if any, by whom the dealer's office or the building in which his office is located and his place of business were identified, and in whose presence the copy was affixed. The said officer shall also obtain the signature or thumb impression of the person identifying the dealer's office or building or place of business, to his report.

(3) When service is made by post, the service shall be deemed to be effected by properly addressing, prepaying and posting by registered post, the notice and, unless the contrary is proved, the service shall be deemed to have been effected at the time at which the notice would be delivered in the ordinary course of post.

(4) The authority at whose instance the notice was issued shall, if he is satisfied from the report of the messenger or the postal acknowledgment or by taking such evidence as he deems proper that the notice has been served in accordance with this rule, record an order to that effect. If he is not satisfied that the notice has been properly served, he may, after recording an order to that effect, direct the issue of a fresh notice.

CHAPTER XII.

52. *Fees.*—Subject to the provision of rule 55, the following fees shall be payable :—

(*i*) Upon an application for revision of an order of assessment or penalty or assessment with penalty passed in an appeal.	Five per cent. of the amount in dispute calculated to the nearest rupee subject to a minimum of one rupee and a maximum of one hundred rupees.
(*ii*) Upon a memorandum of appeal against any order of assessment or penalty or assessment with penalty.	Rupee one.
(*iii*) Upon a memorandum of appeal against, or an application for revision of, any order other than an order specified at (*i*) and (*ii*) above.	Do.
(*iv*) Upon an application for the issue of a duplicate copy of a certificate of registration under rule 7 (2).	Do.

Explanation.—In this rule "the amount in dispute" means the difference between the amount of tax or penalty, if any, or both, demanded and the amount admitted by the dealer to be payable.

53. *Payment of fees in court-fee stamps.*—All fees payable under the Act or the rules shall be paid in court-fee stamps.

CHAPTER XIII.

54. *Maintenance of Register of complaints and prosecutions.*—The Sales Tax Officer shall maintain a register in Form XXVII showing the prosecutions instituted under section 24 of the Act.

55. *Payment of composition money.*—(1) When the Commissioner accepts under section 26 a sum from any dealer by way of composition of any offence, he shall issue an order in Form XXVIII directing the Officer-in-charge of the Government treasury to receive, on his behalf, the sum specified in the order and he shall make over the order to the dealer for presentation at the treasury at the time of payments simultaneously forwarding a copy to the Officer-in-charge of the treasury for his information.

(2) The Commissioner shall fix a date on which the dealer shall produce before such authority as he may direct a receipted chalan in proof of payment.

CHAPTER XIV.

Penalty.

56. *Penalty.*—Any person contravening any provision of these rules shall be punishable with fine which may extend to one thousand rupees and when the offence is a continuing one, with a daily fine not exceeding fifty rupees during the continuance of the offence.

FORM I.

[*Deleted.*]

FORM I-B.

[*See* Rule 5AA.]

To

THE SALES TAX OFFICER,

.....

.....

I.....carrying on the business known as .....
in the District of .....
within the jurisdiction of the Sales Tax Officer.....and
whose place of business is situated at Room/Flat No.....
Name of Building.....Ward/Locality .....
Road.....Village.....Post Office .....
.....Taluka.....do hereby apply for an authorisation in Form I-B.

2. The nature of my business is manufacturing of.....
.....

3. My gross turnover during the last 3 years was as indicated below :—

		Rs.
19.....	19.....	
19.....	19.....	
19.....	19.....	

4. I request that I may be authorised to purchase the following classes of goods on a tax free basis under rule 5-A (1) (*ix*) :—

(1)
(2)
(3)

5. I shall pay to the Commissioner of Sales Tax in respect of any sales or supplies made by me on or after the issue of this authorisation to a person other than a dealer registered under the Act and any goods utilised by me for a purpose other than that specified in paragraph 1 above, an amount calculated at the rate of one-half of an anna in the rupee on the price of goods other than those specified in Schedule I and one anna in the rupee on the price of goods specified in Schedule I; and when this authorisation expires or is cancelled I shall also pay to the Commissioner of Sales Tax an amount calculated in a like manner on the price of any stocks remaining with me at that time.

6. I shall furnish to the Sales Tax Officer.....with returns under section 10 for my turnover relating to every quarter.

7. I shall at all times comply with the provisions of the Bombay Sales Tax Act and the rules made thereunder.

I solemnly declare that the above statements are true to the best of my knowledge and belief.

Date.....19 . Signature.....

FORM I-C.

[*See* Rule 5AA.]

No. .....

Mr. .....
of.....carrying on the business of manufacturing .....by manual labour, or the help of animal power, or by using a mechanical or electrical contrivance is authorised under Rule 5-A (1) (*viii*) of the Bombay Sales Tax Rules, 1946, to purchase the classes of goods specified in the following list free of sales tax under the Bombay Sales Tax Act, 1946 :—

(1)
(2)
(3)

2. This authorisation is subject to the following conditions :—

(1) The holder of this authorisation shall furnish every dealer from whom he purchases any good specified in the above list with a certificate in the following form :—

"Certified that these goods are purchased for use in the manufacture of .....by me personally and that I hold an authorisation No.....dated.....granted by the Sales Tax Officer.....covering the goods purchased.

Date..... Signature .....

(2) The holder of this authorisation shall pay to the Commissioner of Sales Tax in respect of any sales or supplies made by him on or after the issue of this authorisation to a person other than a dealer registered under the Act, and any goods utilised by him for a purpose other than that specified in paragraph 1 above, an amount calculated at the rate of one-half of an anna in the rupee on the price of goods other than those specified in Schedule I and one anna in the rupee on the price of goods specified in Schedule I ; and when this authorisation expires or is cancelled the holder shall also pay to the Commissioner of Sales Tax an amount calculated in a like manner on the price of any stocks remaining with him at that time.

(3) The holder of this authorisation shall furnish the Sales Tax Officer..... with returns under section 10 for his turnover relating to every quarter.

(4) The holder of this authorisation shall at all times comply with the provisions of the Bombay Sales Tax Act and the rules made thereunder.

This authorisation is valid from.....to.....

Seal. Dated..... Sales Tax Officer.....

This authorisation is renewed from.....to.....

Seal Dated..... Sales Tax Officer.....

FORM II.

Application for Registration under Section 8 or 8-A of the Bombay Sales Tax Act, 1946.

(*See* Rule 6.)

To

THE SALES TAX OFFICER,

.....

I....., carrying on the business known as ..... whereof the only/chief place of business within jurisdiction of the Sales Tax Officer..... .....in the district of..... ....., is situated at Room/Flat No..... ....., Name of Building ..... Municipal No. of Building .....

Ward / Locality .....

road.....village..... post office.....Taluka ..... hereby apply for registration in respect of the said business under the Bombay Sales Tax Act, 1946.

**I desire to be registered with effect from the date of commencement of my liability to pay the sales tax under section 5 of the Act.

**I desire to be registered voluntarily under section 8-A of the Act.

**I am not registered under the Act and have not been formerly registered.

**I am already registered in the District/City of.....for my place of business at.....with certificate of registration No.....

**I was formerly registered in the District/City of.....under certificate of registration No.....which was cancelled on.....

The business is

*wholly
mainly
partly
partly
partly

The accounts of the business are kept in the..... language.

My gross turnover of sales and supplies of goods for all my places of business in the State of Bombay, and my turnover in respect of goods brought within the State of Bombay during the past three years and for the current year from the 1st April 19 to † were as under :—

Period.	Gross turnover.	Value of goods brought within the State of Bombay.
19 –19	.. ..	..
19 –19	.. ..	..
19 –19	.. ..	..
From 1st April 19	.. ..	..
To ‡		

In the case of an application for voluntary registration, if the gross turnover of the previous year has not exceeded Rs. 10,000, state here the grounds to show that the gross turnover is likely to exceed Rs. 10,000 in a year.

****The value of goods brought within the State of Bombay during the whole year 19.....to 19.....was Rs.....(in figures) Rupees.....(in words)

The following classes of goods are ordinarily purchased :—

(*a*) for purposes of manufacture ;

(*b*) for resale ;

* Enter here whether business is wholly agriculture, horticulture, mining, manufacturing, wholesale distribution, retail distribution, catering, etc. or any combination of two or more of them.

† Strike out whichever is not applicable.

‡ In the case of dealers who bring goods within the State of Bombay from outside.

The following classes of goods are manufactured for sale :—

The following classes of goods are / Goods are not imported direct from places outside the State :—

I have.....additional places of business and warehouses at the addresses* enumerated below and have no other warehouse or place of business in the district of.....

Complete list of additional places of business :

Complete list of warehouses :—

I have.....places of business and warehouses in the State of Bombay outside the district of.....

Complete list of places of business :

Complete list of warehouses :—

In the case of business not being a Company registered under the Indian Companies Act, the following particulars must be furnished :—

Serial No.	Full name of the Partner including his surname and father's name.	Permanent address of the partner.	Extent of interest in the partnership.

The above statements are true to the best of my knowledge and belief.

Signature .....

Dated.....19 .

ACKNOWLEDGMENT.

Received an application in Form II from..... for registration under section 8 or 8-A of the Bombay Sales Tax Act, 1946.

Receiving Officer.

* Give all the particulars of addresses as in paragraph 1 above.

FORM III.

Certificate of Registration under Section 8 or 8-A of the Bombay Sales Tax Act, 1946.

(*See* Rule 7.)

No..... District .....

This is to certify that..... carrying on the business known as.....where of the only/chief place of business in my jurisdiction in the District of..... is situated at Room/Flat No....., Name of Building..... .....Municipal No. of Building....., Ward/Locality ..... Road....., Village....., post office..... .....,taluka.....has been registered as a dealer under the Bombay Sales Tax Act, 1946. The business is—

*wholly

mainly

partly

partly

partly

This dealer has additional places of business and warehouses at the addresses† specified below :—

Additional places of business :—

Warehouses :—

Sales of other dealers to this dealer will be free of tax in the case of—

(*a*) goods certified as purchased for the purpose of resale or for the packing of goods to be sold ; or

(*b*) goods included in any classes of goods specified in the following list when certified as purchased for the purpose of use in the manufacture of goods for sale :—

List.

* * * * * *

The following classes of goods are manufactured for sale :—

Seal of the
Sales Tax Officer.

.....

Dated ..... Sales Tax Officer.

The Sales Tax Officer will sign against the last entry at the time of issuing the certificate and against any subsequent excisions or additions.

---

* State here whether business is wholly agriculture, horticulture, mining, wholesale, distribution, retail distribution, catering, etc. or a combination of any two or more.

†Give all the particulars of addresses as in paragraph 1 above.

FORM IV.

Alphabetical List of Registered Dealers.

(*See* Rule 10.)

District .....

(Arranged according to the initial letter of the name of the dealer.)

Serial No.	Dealer's name.	Taluka / Village/Town and Post Office / Ward.	Road.	Building and Room/Flat No.	Registration certificate.		Remarks.
					Number	Date.	
1	2	3	4	5	6	7	8

FORM V.

List of Registered Dealers topographically arranged.

(*See* Rule 10.)

District.....

Taluka / Village/Town and Post Office / Ward.	Road.	Building and Room/Flat No.	Name of the dealer.	Nature of business.
1	2	3	4	5

Language in which the dealer maintains his accounts.	Registration.	
	Number.	Date.
6	7	

FORM V-A.

**Application for cancellation of registration under section 8-A of the Bombay Sales Tax Act, 1946.*

(*See* Rule 13-A.)

To

The Sales Tax Officer,

.....

I....., carrying on the business known as.....
.....holding a certificate of registration bearing number .....
whose only/chief place of business in the district of .....
is situated at.....P. O. .....
(full address).
hereby apply for the cancellation of the said certificate of registration under
†sub-section (*5*) of section 8-A of the Bombay Sales Tax Act, 1946.
†sub-section (*6*) (*b*) of section 8 of the Bombay Sales Tax Act, 1946.

I import / do not import goods for sale.

I manufacture and process the following / do not manufacture or process any goods for sale :—

My gross turnover, and my turnover in respect of goods imported during the past three years, and for the current year up to now for all my places of business in the State of Bombay are as under :—

Period.	Gross turnover.	Value of imports.
19 –19	..	
19 –19	..	
19 –19	..	

From 1st April 19

to.....

[Here state any grounds in support of the application.]

I.....do hereby declare that what is stated herein is true to the best of my knowledge and belief.

Place..... Signature .....‡

Date..... Status .....

* A separate application must be made to each Sales Tax Officer who has granted a certificate of registration to the dealer.

† Delete whichever is not applicable.

‡ To be signed by the proprietor of the business, or, on his behalf, by a partner of the firm or by the principal officer managing the business.

FORM V-O.

(*See* Rule 10-A.)

Declaration under Section 16-A.

I/We, ... of ..... carrying on the business(es) known as..... at.....and other places in the State of Bombay as the guardian/trustee or.....on behalf of $\frac{\text{who am/are}}{\text{which is}}$ the manager of the Hindu undivided family $\frac{\text{Association, club or society}}{\text{firm or Company}}$ known as.....and who am/are which is liable to pay the tax under the Bombay Sales Tax Act, 1946, do hereby declare that I.....Mr.....who is member/partner/manager/Director of the said family/Association, Club or Society/Firm or Company, shall be deemed to be the Manager of the said business(es) at all places within the State of Bombay for the purpose of the said Act, and the said Mr. .....shall at all times comply with the provisions of the said Act and the rules made thereunder :—

Place	Signature
Date	Status
Place	Signature
Date	Status
Place	Signature
Date	Status
Place	Countersignature of person nominated .....
Date	
	Status.....

The declaration shall be signed in the case of—

(*i*) a Hindu Undivided family, by its manager,

(*ii*) an association, club or soceity, by its President or Chairman and the Secretary,

(*iii*) a firm, by the partners having a total share of not less than 50 per cent.

(*iv*) a private limited company, by all its members,

(*v*) a public limited company, the Managing Director or the Chairman of the Directors and countersigned by the person nominated.

FORM VI.

Return of Sales Tax payable by a Dealer.

(*See* Rules 17 and 18.)

(Separate returns should be submitted to each Sales Tax Officer in whose jurisdiction a dealer has a place or places of business.)

Return of Sales Tax payable for the quarter ending on the.....

day of.....

Name of the dealer .....

Address of the dealer .....

Dealer's Registration number .....

Gross turnover in respect of—

Rupees.

1. Sale of goods during the quarter.....

Less—

2. (*i*) Cost of freight, delivery or installation on sales made during the quarter, when separately charged to customer.
   (*ii*) Cash discount allowed during the ..... quarter when separately shown.
   (*iii*) Value of goods returned within three months (rule 5-B) .....

Turnover ...

Less—

3. Deductions under section 6 (*3*) Rule I on account of sales effected during the quarter—
   (*i*) Under sub-clause (*i*)—goods exempted under section 7 .....
   (*ii*) Under sub-clause (*ii*)—specified goods sold to registered dealers .....
   (*iii*) Under sub-clause (*iv*)—(*a*) under rule 5-A (1) (*viii*) .....
   (*b*) Under other clauses of rule 5-A (1) .....

Balance (A) ...

4. Balance (A) includes sales and supplies as under :—

(*a*) (1) Goods not specified in Schedule I and other than Bullion and Specie :—

(*i*) Despatched to places notified under the proviso to section 6 (*1*).....

.....

(*ii*) Remainder not so despatched .....

(2) Bullion and Specie :—

(*i*) Despatched to places notified under proviso to section 6 (*1*).....

(*ii*) Remainder not so despatched .....

(*b*) Goods specined in Schedule I :—

(*i*) Despatched to places notified under the proviso to section 6 (*1*).....

.....

(*ii*) Remainder not so despatched .....

4-A. Calculation of taxable turnover and tax payable thereon—

(*a*) *General tax*—

(1) Goods not specified in Schedule I and other than Bullion and Specie :—

Rupees.

(*i*) Item 4 (*a*) (1) (*i*) above is .....

Less 1/65th part .....

Balance taxable .....

Tax at the rate of one-quarter of an anna in the rupee .....Rs.

Rupees.

(*ii*) Item 4 (*a*) (1) (*ii*) above is .....Rs.

Less 1/33rd part .....

Balance .....

Add—

(1) Prices of goods utilised for purposes other than those specified in certificate of registration.....

(2) Value of stocks under sections 18 and 18-A.....

Total taxable turnover .....

Tax at the rate of one-half of an anna in the rupee .....Rs.

(2) Bullion and Specie—

Rupees.

(*i*) Item 4 (*a*) (2) (*i*) above is .....

Less 1/8th per cent. .....

Balance taxable .....

Tax payable at 1/8th per cent.....Rs. .....

Rupees.

(*ii*) Item 4 (*a*) (2) (*ii*) above is .....
Less 1/4th per cent. .....
Balance .....

Add—

(*i*) Prices of goods utilised for purposes other than those specified in certificate or registration.....
(*ii*) Value of stocks under sections 18 and 18-A .....
Total taxable .....

Tax payable at 1/4th per cent. .....Rs. .....

(*b*) *Special Tax*—

Rupees.

(*i*) Item 4 (*b*) (*i*) above is .....
Less 1/33rd part .....
Balance taxable .....
Tax at the rate of one-half of an anna in the rupee ....
.....Rs. .....

(*ii*) Item 4 (*b*) (*ii*) above is .....
Less 1/17th part .....
Balance .....

Add—

(*i*) Prices of goods utilised for purposes other than those specified in certificate of registration.....
(*ii*) Value of stocks under sections 18 and 18-A .....
Total taxable .....

Tax at the rate of one anna in the rupee .....Rs. .....

4-B. (*i*) Total amount of tax payable .....Rs. .....

(*ii*) Penalty on above at 3/4th per cent. per month during which default in paying tax continues .....Rs. .....
(*iii*) Gross amount of tax and penalty payable .....
.....Rs. .....

5. Amount, if any, credited by refund adjustment order.....
.....Rs. .....

6. Net Tax payable. .....Rs. .....

7. Tax paid, under chalan number .....dated .....
(The chalan should be attached to this return.)

The above statements are true to the best of my knowledge and belief.

Date.....19 . Signature .....

FORM VI-A.

[*Deleted.*]

FORM VII.

Notice under Section 10 of the Bombay Sales Tax Act, 1946.

(*See* Rule 18/28.)

To

.....(dealer).

.....(address) Registration No. if any.

You are required to submit a return(s) within (one calendar month) of the receipt of this notice for the quarter ending.....day of..... 19 , in Form VI which is enclosed and to pay the tax due according to the return(s) within the said period into the Government Treasury and furnish the receipted treasury chalan to me along with your return.

Seal.

(Signed) .....

Designation .....

Date.....

(Failure without sufficient cause to submit a return(s) as required by section 10 or submission of a false return(s) renders a dealer liable to prosecution under section 24 of the Act.)

FORM VIII.

Certificate issued to a Dealer when no Sale effected by him is liable to Tax under the Bombay Sales Tax Act, 1946.

(*See* Rule 20.)

Whereas.....(dealer).
(Registration number.....)
of District.....has shown to my satisfaction that no sales effected by him are liable to tax under the Bombay Sales Tax Act, 1946, it is hereby certified that the said .....
dealer) is not required to furnish any return in Form VI appended to the Bombay Sales Tax Rules, 1946, in respect of the year ending .....
day of 19.....

Seal.

(Signed) .....

Designation .....

Date.....

Renewals.

Renewed on.	Renewed till.	Signature and designation of Renewing Officer.

FORM IX.

Register of Certificates issued in Form VIII.

(*See* Rule 20.)

Dealer's name.	Dealer's address.	Registration Number.	Date of issue of certificate in Form VIII.	Renewals of Certificate in Form VIII.										
				19	19	19	19	19	19	19	19	19	19	
				Date of application.	Date of renewal.	Date of application.	Date of renewal.	Date of application.	Date of renewal.	Date of application.	Date of renewal.	Date of application.	Date of renewal.	Remark
1	2	3	4	5	6	7	8	9	10	11	12	13	14	15

Note.—The Sales Tax Officer shall initial against the date of issue and renewal of every certificate.

FORM X.

Chalan.

(*See* Rule 22.)

THE BOMBAY SALES TAX ACT, 1946

XIII—Other Taxes and Duties—D-Other Items—Sales Tax.

Chalan of tax* penalty composition money* paid to.....

Treasury/Sub-treasury
Branch of the Imperial Bank of India, for the quarter ending .....
Reserve Bank of India.

By whom tendered.	Name and address of the dealer on whose behalf money is paid and registration number.	Payment on account of.	Amount (to be entered in figures).
1	2	3	4
			Rs. a. p.
	(*a*) Total Sales Tax payable		
	(*b*) Penalty under sectin 12 (*3-A*)		
	(*c*) Penalty under section 11 (*5*)		
	(*d*) Composition money		

Total :—Rs. ..... Rupees.....
(in words)

.....

Signature of Dealer or depositor.

Dated .....

* Enter Tax, Penalty and composition money separately.

For Use In The Treasury.

1. Received payment of Rs. ..... (Rupees .....
(in figures) (in words)

.....)

2. Date of entry .....

Treasurer. Accountant. Treasury Officer.
Agent or Manager.

FORM X-A.

Notice for payment of Tax due according to a Dealer's Return under Section 10 or Statement under rule 26-A (3).

(*See* Rule 22-A.)

To
.....(dealer of) .....(address)

Registration No. .....

WHEREAS the return under section 10/statement under rule 26-A (3) for the quarter ended.....has been furnished by you (strike out the clause not applicable) without a receipted copy of the chalan showing payment of the amount of tax Rs.....which is due according to the return/statement (strike out the clause not applicable) with a receipted copy of a chalan showing payment of only Rs. as against the amount of tax of Rs. which is due according to the return/statement without payment of penalty at ¾ per cent. for each month during which default in payment of tax continued, which will be Rs. .....up to 19 .....

You are hereby directed to pay the sum of Rs.....(in words Rupees.....) into the Government Treasury at.....on or before (date) .....and to produce the receipted copy of the chalan in proof of payment before me on a date not later than the.....day of..... 194 , failing which the said sum of Rs.....will be recoverable from you as an arrear of land revenue.

Seal.

(Signed) .....
Sales Tax Officer.

Dated .....

FORM XI.

Collection Register.

(*See* Rule 23.)

Name and Registered No. of dealer.	Address of dealer.	Quarter Number. I II III IV	Amount of tax payable according to return.	Amount paid.	Date of payment and treasury chalan No.
1	2	3	4	5	6

Serial No. of entry in Form XII.	Serial No. of entry in Form XV.	Period of assessment		Date of issue of notice in Form XIII or Form XIV.	Date of issue of notice in Form XVII.
		From	To		
7	8	9	10	11	12

Balance paid after assessment.	Date and Treasury Chalan Number.	Serial No. of entry in Form XII.	Amount refunded.	No. and Refund Payment Order or Refund Adjustment.	Remarks.
13	14	15	16	17	18

FORM XII.

Progressive Collection Register.

Month .....

(*See* Rule 24.)

Serial No.	(*a*) Chalan No. (*b*) Refund Adjustment Order No. (*c*) Recovered by Collr. Ref. No.	(*a*) Date of payment. (*b*) Date of Order. (*c*) Date of Recovery.	Registration certificate No.	Name of the dealer.	AMOUNT PAID. General Tax.			
					½ anna.	¼ anna.	¼ per cent.	⅛ per cent.
1	2	3	4	5	6			

AMOUNT PAID—*contd.*								
Special Tax.		Total tax payable.	Penalty under section.		Composition money under section 26.	Total.	Remarks.
1 anna.	½ anna.		11 (*5*)	12 (*3A*)			
7		8	9		10	11	12

FORM XII-A.

(*See* Rule 26-A.)

To

The Sales Tax Officer,

I.....the holder of Registration Certificate No.....carrying on the business known as.....whereof the only/ chief place of business within the jurisdiction of the Sales Tax Officer,..... .....in the district of.....is situated at Room/Flat No.....Name of Building..... Municipal No. of Building.....Ward/Locality..... .....Road.....Village..... Post Office.....Taluka.....

do hereby apply for permission to compound the general tax payable by me under clause (*a*) of section 6 (*1*) of the Bombay Sales Tax Act, by paying the lump sums determined in accordance with rule 26-A of the B. S. T. Rules.

2. The nature of my business is..... .....

3. My gross turnover during the year 19 -19 was Rs..... and that during.....months of the current year from 1st April 19 to.....was Rs.....

4. I do hereby undertake that I shall regularly furnish statements in Form XII-B and pay the amounts due accordingly by the due dates prescribed under section 10 of the Act.

[Here state reasons.]

I solemnly declare that the above statements are true to the best of my knowledge and belief.

Date.....19 . Signature.....

FORM XII-B.

(*See* Rule 26-A.)

Statement under Rule 26-A for the Quarter ended the.....day of.....19

Name of the dealer.....

Address of the dealer.....

Dealer's Registration No. .....

Part I.—Calculation of lump sum in lieu of general tax.

1. Particulars of goods purchased other than those specified in Schedule I and Bullion and Specie during the period from..... to.....

Serial No.	Class of goods.	Quantity.	Price.
1	2	3	4
			Rs.
		Total ..	

Rupees.

Less—

2. (*i*) Cash discount allowed during the quarter when separately shown .....

(*ii*) Value of goods returned within 3 months (Rule 5-B) ..

Net purchases ..

Less—

3. Deduction under section 6 (*3*) Rule I in respect of goods sold during the period .....

(*i*) Under sub-clause (*i*) sales of goods exempted under section 7 .....

(*ii*) Under sub-clause (*ii*) specified goods sold to registered dealers .....

(*iii*) Under sub-clause (*iv*)—(*a*) under rule 5-A (1) (*viii*).... .....

(*b*) Under other clauses of rule 5-A (1).....

Balance (X) ..

4. *Add*—

(*i*) Ten per cent. of balance (X).....

(*ii*) .....per cent. of balance (X) .....

5. Total ..

5A. Item 5 includes sales or supplies of goods as under :—

(*i*) Despatched to places notified under proviso to section 6 (*1*) .....

(*ii*) Remainder not so despatched .....

Total ..

6. Amount payable in respect of—

(*i*) Item 5A (*i*) (1/64th part) Rs. .....

(*ii*) Item 5A (*ii*) (1/32nd part) Rs. .....

7. Gross turnover of Bullion and Specie .....

(*a*) (*i*) Cost of freight or delivery when separately charged ..... *Rupees.*

(*ii*) Cash discount allowed when separately shown .....

(*iii*) Value of goods returned within 3 months (Rule 5-B).... .....

Net Turnover ... Rs. .....

(*b*) Deductions under section 6 (*3*), Rule 1, in respect of goods sold during the period :—

(*i*) Under sub-clause (*ii*)—specified goods sold to the registered dealers.....

(*ii*) Under sub-clause (*iv*)—(*a*) under rule 5A (1) (*viii*) ....

(*b*) Under other clauses of rule 5A (1) .....

BALANCE.....(X) .....

(*c*) Balance (X) includes sales or supplies of goods as under :—

(*i*) despatched to places notified under proviso to section 6 (*1*) .....

(*ii*) Remainder not so despatched .....

(*d*) Amount payable in respect of :—

Rupees.

(*i*) Item 7 (*c*) (*i*) above is .....
Less $\frac{1}{8}$ per cent. .....
Balance Taxable .....
Tax payable at $\frac{1}{8}$ per cent. ..... Rs. .....

Rupees.

(*ii*) Item 7 (*c*) (*ii*) above is .....
Less $\frac{1}{4}$ per cent. .....
Balance .....

Add—

(*i*) Prices of goods utilised for purposes other than those specified in certificate of registration .....
(*ii*) Value of stocks under sections 18 and 18A .....
Total Taxable .....
Tax payable at $\frac{1}{4}$ per cent. ..... Rs. .....

PART II.—Calculation of Special Tax.

Rupees.

8. Gross turnover in respect of sale of goods specified in Schedule I during the quarter .....

Rupees.

Less—

9. (*i*) Cost of freight, delivery or installation on sales made during the quarter, when separately charged to customer .. ..

(*ii*) Cash discount allowed during the quarter when separately shown .....

(*iii*) Value of goods returned within 3 months (Rule 5-B) ....

Turnover ..

Less—

10. Deductions under section 6 (*3*), Rule 1, on account of sales effected during the quarter—

(*a*) under sub-clause (*ii*) specified goods sold to registered dealers .....

(*b*) under sub-clause (*iv*) (1) under Rule 5-A (1) (*viii*) ....

(2) Under other clauses of Rule 5A (1) .....

Balance (A)

11. Balance (A) includes sales and supplies as under :—
(*i*) despatched to places notified under proviso to section 6 (*1*) .....
(*ii*) Remainder not so despatched.....

Total .....

12. Calculation of special tax payable :—

Rupees

(*i*) Item No. 11 (*i*) above is .....Rs. .....
Less 1/33rd part .....
Balance Taxable .....
Tax at the rate of half of an anna in the rupee..... Rs.....

(*ii*) Item 11 (*ii*) above is .....
Less 1/17th part .....
Balance .....

Add—
(*i*) Price of goods utilised for the purposes other than specified in the certificate of registration .....Rs. .....

Rupees

(*ii*) Value of stocks under sections 18 and 18A .....
Total taxable turnover .....

Tax at the rate of one anna in the rupee.....Rs.....

13. Total amount payable as lump sum for General Tax and Special Tax—
Part I, Item 6 (*i*).
Part I, Item 6 (*ii*).
Part I, Item 7 (*d*) (*i*).
Part I, Item 7 (*d*) (*ii*).
Part II, Item 12 (*i*).
Part II, Item 12 (*ii*)

14. Total amount payable as lump sum for general tax and as special tax shown in Part I and Part II .....

15. Amount, if any, credited by Refund Adjustment Order .. ..

16. Net amount payable.

17. Amount paid under Chalan No..... dated.....(the chalan should be attached to this return).

The above statements are true to the best of my knowledge and belief.

.....,
Signature,

Dated.....19 ,

MG-II Bk H 160—71a

FORM XII-C.

(*See* Rule 26-A.)

To

The Sales Tax Officer,

.....

I.....holder of Registration Certificate No.....carrying on the business known as..... whereof the only/chief place of business within the jurisdiction of the Sales Tax Officer,..... in the district of.....is situated at Room/Flat No.....Name of building..... .....Ward/Locality ..... Road.....Village.....Post office .....Taluka.....do state that I have been permitted by the.....to compound the general tax payable by me under clause (*a*) of section 6 (*1*) by paying lump sums under rule 26-A. I do hereby apply for permission to pay the general tax payable by me in future with effect from.....in accordance with sub-section (*3*) of section 6 for the following reasons :—

[Here state reasons.]

My total purchases during the current year for.....months from 1st April to.....were Rs.....and my gross turnover during the same period was Rs.....

I solemnly declare that the above statements are true to the best of my knowledge and belief.

Date..... **Signature**.....

FORM XIII.

Notice under Section 11 (2) of the Bombay Sales Tax Act, 1946.

(*See* Rule 27.)

To

(Name) .....

(Address) .....

Registration No.....

Whereas I desire to satisfy myself that the returns furnished by you in respect of the period from ..... 19 ..... to .....19... are correct and complete, you are hereby directed to *attend in person/or by* an agent and to *produce or cause to be produced any evidence on which you rely in support of the said returns

at .... on .....
(place) (date)

at.....
(time)

Seal

(Signed) .....

Designation .....

Date..... .....

*Strike out whichever is not required.

FORM XIV.

Notice under Section 11 (4) (5) of the Bombay Sales Tax Act, 1946.

(*See* Rule 28.)

To

(Name) ....

(Address) .....

Registration No. if any .....

*Whereas being a registered dealer you have not furnished by the prescribed date returns in respect of the period, ...

*Whereas being liable to pay tax under the Bombay Sales Tax Act, 1946, in respect of the period ..... you have wilfully failed to apply under section 8 of the said Act for registration.

You are requested to attend in person or by an agent at .....
(place)

on ..... at ..... and show cause as to
(date) (time)

why you should not be assessed to tax in respect of the said period† and in addition to a penalty under sub-section (5) of section 11 of the said Act and produce such evidence as you wish.

Seal

(Signed) .....

Designation .....

Date .....

*Strike out whichever inapplicable.

†Delete if inapplicable.

FORM XV.

Register of Cases instituted under Section 11 of the Bombay Sales Tax Act, 1946.

(*See* Rule 29.)

Serial No.	Name of the dealer. / Registration No.	Period under assessment.	Date of issue of Form XIII or XIV	Form XVII.			Amount of tax assessed.
				Date of issue.	Date fixed for payment.		
1	2	3	4	5	6		7
					(*a*) General Tax.	(*b*) Special Tax.	

Amount and penalty imposed, if any.	Amount paid before assessment.	Balance demanded in Form XVI	Amount paid after assessment before requisition is sent to Collector.	Date(s) of payment.	Tax, as modified on appeal/revision.	
8	9	10	11	12	13	
					(*a*) General Tax.	(*b*) Special Tax.

Penalty as modified on appeal/revision.	Amount for which requisition is sent to Collector.	Serial No. in the certificate Register.	Amount recovered through Collector.	Date of recovery.	Remarks.
14	15	16	17	18	19

FORM XVI.

Form of Order of Assessment under Section 11 of the Bombay Sales Tax Act, 1946.

(*See* Rule 30.)

District .....

Registration No. .....

1. Year of assessment.....period of assessment .....

2. Name and address of the dealer .....

3. Location of places of business .....

4. (*i*) Account books produced .....

(*ii*) Method of accounting .....

	As in dealer's Return.		As determined under section 11.	
	Turnover.	Tax.	Turnover.	Tax.
5. Gross turnover—				
6. Deductions under section 6 (*3*) Rule 1—				
(*i*) Value of the goods exempted under section 6 (*3*), Rule 1 (*i*).				
(*ii*) Value of goods sold to registered dealers.				
(*iii*) (1) Value of goods despatched or removed under Rule 5A (*1*) (*viii*).				
(2) Value of goods exempted under other clauses of Rule 5A (*1*).				
7. Balance *A*				
8. Calculation of tax—				
I. For Part of *A* relating to goods other than those specified in Schedule I and bullion and specie :—				
(*i*) Despatched to places notified under proviso to section 6 (*1*)				

	As in dealer's Return.		As determined under section 11.	
	Turnover.	Tax.	Turnover.	Tax.
	Rs.	Rs.	Rs.	Rs.
Less —1/65th part				
Balance taxable				
Tax at the rate of $\frac{1}{4}$ anna in the rupee				
(*ii*) Remainder not so despatched				
Less 1/33rd part				
Balance				
Add—				
(*i*) Price of goods utilised for purposes other than those specified in the certificate of registration.—				
(*ii*) Value of stocks under sections 18 and 18A.				
Total taxable				
Tax at the rate of $\frac{1}{2}$ anna in the rupee				
II. For part of *A* relating to bullion and specie—				
(*i*) Despatched to places notified under proviso to section 6 (*1*).				
Less— $\frac{1}{8}$ per cent.				
Balance Taxable.				
Tax at the rate of $\frac{1}{8}$ th per cent.				
(*ii*) Remainder not so despatched.				
Less— $\frac{1}{4}$ per cent.				
Balance				

	As in dealer's Return.		As determined under section 11.	
	Turnover.	Tax.	Turnover.	Tax.
	Rs.	Rs.	Rs.	Rs.
Add—				
(*i*) Price of goods utilised for purpose other than those specified in the certificate of registration.				
(*ii*) Value of stocks under sections 18 and 18A.				
Total Taxable ...				
Tax at the rate of $\frac{1}{4}$th per cent. ...				
III. For part of *A* relating to goods specified in Schedule I—				
(*i*) Despatched to places notified under proviso to section 6 (*i*).				
Less—1/33rd part ...				
Balance taxable ...				
Tax at the rate of $\frac{1}{2}$ anna in the rupee.				
(*ii*) Remainder not so despatched.				
Less—1/17th part ...				
Balance ...				
Add—				
(*i*) Price of goods utilised for purpose other than those specified in the certificate of registration.				
(*ii*) Value of stocks under sections 18 and 18A.				
Total Taxable ...				
Tax at the rate of 1 anna in the rupee.				
9. Total tax payable ...				
10. Penalty payable under section 12 (3) (*a*).				
11. Total amount of tax and penalty payable.				

	As in dealer's Return.		As determined under section 11.	
	Turnover.	Tax.	Turnover.	Tax.
	Rs.	Rs.	Rs.	Rs.
12. Amount already paid with Return.				
13. Net balance due ...				
14. Assessment order ...				

(Signed).....

(Designation).....

Seal.

Dated .....

FORM XVI-A.

Form of Order of Assessment under Section 11 of the Bombay Sales Tax Act, 1946, and Rule 26-A.

(*See* Rule 30.)

District.....

Registration No.....

1. Year of assessment..... Period of assessment.....

2. Name and address of the dealer.....

3. Location of place of business.....

4. (*a*) Account books produced.....

   (*b*) Method of accounting.....

5. Section and sub-section under which assessment made.....

	As in the dealer's return.		As determined under section 11.	
	Turnover.	Tax.	Turnover.	Tax.
	Rs.	Rs.	Rs.	Rs.
6. Calculation of lump sum payable under rule 26-A—				
(*i*) Value of goods purchased other than those specified in Schedule I and bullion and specie.				

	As in dealer's Return.		As determined under section 11.	
	Turnover.	Tax.	Turnover.	Tax.
	Rs.	Rs.	Rs.	Rs.
(*ii*) *Less* : Deductions—				
(*a*) Value of goods exempted under section 6 (*3*) Rule 1 (*i*).				
(*b*) Value of goods sold to registered dealers.				
(*c*) (1) Value of goods despatched under rule 5-A.				
(2) Value of goods sold under other clauses of rule 5-A (*i*).				
Balance (*X*) ...				
(*iii*) *Add*—10 per cent. of Balance (*X*). ...				
(*iv*) *Add*— per cent. of Balance (*X*) ...				
(*v*) Total on which lump sum is payable (*A*).				
(*vi*) Portion *A* relates to Sales and Supplies of goods as under :—				
(*a*) despatched to places notified under proviso to section 6 (*i*).				
(*b*) Remainder not so despatched.				
7. Amount of tax payable in respect of—				
Item 6 (*vii*) (*a*) at 1/64th part. Rs.....				
Item 6 (*vii*) (*b*) at 1/32nd part. Rs.				
8. (*a*) Bullion and Specie—				
(*i*) Total value of the goods sold ...				
(*ii*) Cash discount allowed during the quarter when separately shown.				

	As in dealer's Return.		As determined under section 11.	
	Turnover.	Tax.	Turnover.	Tax.
	Rs.	Rs.	Rs.	Rs.
(*iii*) Value of goods returned within 3 months (rule 5-B).				
Balance ...				
(*b*) Deductions under section 6 (*3*) Rules 1 in respect of goods sold during the period.				
(*i*) Under sub-clause (*ii*) specified goods sold to registered dealers.				
(*ii*) Under sub-clause (*iv*) (1) under rule 5-A (1) (*viii*).				
(2) Goods sold under other clauses of rule 5-A (*i*).				
Balance ...			*X*	
(*c*) Balance (*X*) includes sales or supplies of goods as under—				
(*i*) Despatched to places notified under the proviso to section 6 (*i*).				
(*ii*) Remainder not so despatched.				
(*d*) Amount payable in respect of—				
(*i*) Despatched to places notified under proviso to section 6 (*1*).				
Less $\frac{1}{8}$ per cent. ...				
Balance taxable ...				
Tax at the rate of $\frac{1}{8}$th per cent.				
(*ii*) Remainder not so despatched.				
Less $\frac{1}{4}$ per cent. ...				
Balance ...				

	As in the dealer's return.		As determined under section 11.	
	Turnover.	Tax.	Turnover.	Tax.
	Rs.	Rs.	Rs.	Rs.
Add—				
(*i*) Price of goods utilised for purpose other than those specified in the certificate of registration.				
(*ii*) Value of stocks under sections 18 and 18-A.				
Total Taxable ..				
Tax at the rate of ¼th per cent.				
Total tax payable as lump sum in lieu of General Tax.				
9. Gross turnover of goods specified in Schedule I.				
10. *Less*—				
(*i*) Under sub-clause (*ii*) specified goods sold to registered dealers.				
(*ii*) Under sub-clause (*iv*) (1) under rule 5-A (1) (*viii*) (2) under other clauses of rule 5-A (1).				
11. Balance A ..				
12. Balance A includes sales and supplies as under :—				
(*i*) Despatched to places notified under the proviso to section 6 (*1*).				
(*ii*) Remainder not so despatched ..				
13. Calculation of the special tax payable.				
(*i*) Item No. 12 (*i*) above.				
Less 1/33 part.				
Balance Taxable.				
Tax payable at the rate of half an anna in the rupee.				
(*ii*) Item No. 12 (*i*) is				
Less 1/17th part,				
Balance,				

	As in dealer's return.		As determined under section 11.	
	Turnover.	Tax.	Turnover.	Tax.
	Rs.	Rs.	Rs.	Rs.
Add—				
(*i*) Price of goods utilised for purpose other than those specified in the certificate of registration.				
(*ii*) Value of stocks under sections 18 and 18-A.				
Total taxable turnover. ...				
Tax at the rate of one anna in the rupee.				
Tax payable as Special Tax ...				
14. Total amount assessed including lump sum under Rule 26-A and Special Tax.				
15. Amount of penalty payable—				
(*i*) under section 12 (3*A*) ...				
(*ii*) under section 11 (*5*) ...				
16. Total due ...				
17. Amount already paid with return ...				
18. Net balance due ...				
19. Assessment order ...				

Seal.

(Signed) .....

Dated.....19 Designation.....

FORM XVII.

Final Notice of Assessment under Section 12 of the Bombay Sales Tax Act, 1946.

(*See* Rule 31.)

To

.....(dealer) of.....

.....(address) Registration No. .....

1. *In continuation of the notice in Form XIII/XIV served on you on the ..... day of ..... 19.....

*With reference to your petition of appeal/revision dated the .... day of ..... 19 before the

Assistant Commissioner,
Deputy Commissioner of Sales Tax,
Commissioner of Sales Tax, ...
Sales Tax Tribunal,

(*i*) The amount of tax payable by you has been finally assessed at Rs. ..... as shown in the table below :—

	Rate of Tax.	Taxable turnover.	Tax assessed.	Amount paid.	Balance due.
	1	2	3	4	5
		Rs. a. p.	Rs. a. p.	Rs. a. p.	Rs. a. p.
(*a*) General tax for sales of,					
(*i*) Goods other than those specified in Schedule I and Bullion and Specie.					
$\frac{1}{4}$ anna	———				
$\frac{1}{2}$ anna	———				
(*ii*) Bullion and Specie					
$\frac{1}{8}$th per cent.	———				
$\frac{1}{4}$th per cent.	———				
Total General Tax	..				
(*b*) Special tax, for sales of goods specified in Schedule I.					
$\frac{1}{2}$ anna	———				
1 anna	———				
Total Special Tax payable	..				
Amount of tax	..				

*Strike out whichever not applicable.

(*ii*) The penalty payable by you under section 12 (*3A*) for default in paying tax up to the ..... has been determined at Rs. .....

(*iii*) A penalty of Rs. ..... has also been imposed on you under sub-section (*5*) of section 11.

2. You are hereby directed to pay the sum of Rs. ..... (Rupees .....) (as shown in the table below) plus a further penalty of 3/4 per cent. on Rs. ..... for every month during which the amount remains unpaid after the (end of month in which assessment is made), into the Government treasury at ..... on or before (date) ..... and to produce the receipt in proof of the payment before the undersigned not later than the ..... day of ..... 19 ..... failing which the said sum of Rs. .....(Rupees .....) together with the penalty as specified above will be recoverable from you as an arrear of land revenue.

3. Any appeal against the assessment must be presented to

*Assistant Commissioner of Sales Tax
Deputy Commissioner of Sales Tax
Commissioner of Sales Tax
Sales Tax Tribunal

....., under section 21 of the Bombay Sales Tax Act, 1946, in the manner prescribed by the Bombay Sales Tax Rules, 1946, within sixty days from the passing of the order of assessment. The order of assessment was passed on the ..... 19 .

Tax payable.	Amount Assessed	Amount paid	Balance Due
Penalty under section 12 (*3A*)			
Penalty under section 11 (*5*)			
Total			

Seal.

Dated .....

Signed .....

Designation .....

*Strike out whichever not applicable.

FORM XVII-A—[*Deleted.*]

FORM XVIII—[*Deleted.*]

FORM XIX.

Application for Refund of Sales Tax under Section 13 of the Bombay Sales Tax Act, 1946.

(*See* Rule 35.)

To

The Commissioner,

.....

I,....., carrying on the business known as.....bearing registration certificate number .....whose only/chief place of business in the district of.....is, situated at .....P. O....., pray for a refund of Rs.....being the amount of excess tax paid by me $\frac{\text{*in cash}}{\text{by Refund Adjustment Order}}$ payable at the..... $\frac{\text{Treasury}}{\text{Sub-treasury}}$

1. Period of asses sment for which refund is claimed .....

	General tax	Special
	Rs.	Rs.
2. Amount of tax already paid on.....under chalan number		
3. Amount of tax finally assessed		
4. Amount of refund claimed		

5. Grounds of refund .....

I, ..., the applicant named in the above application do hereby declare that what is stated herein is true to the best of my knowledge and belief.

Dated ..... Signature .....

*Strike out whichever is in applicable.

FORM XX

Refund Payment Order.

[*See* Rule 37.]

Book No. Voucher No.	Book No. Voucher No.	Book No. Voucher No.
Refunds.	Refunds.	Refunds.
Counterfoil Order for the refund of sales tax.	Order for the refund of sales tax. (Payable at the Government Treasury within one month of the date of issue).	Order for the refund of sales tax (Payable at the Government Treasury within one month of the date of issue.)
Refund payable to—	To the Treasury Officer,	To the Treasury Officer,
Registration Certificate No.	.....	.....
Assessment Record No.	1. Certified that with reference to the assessment record of ..... bearing Registration Certificate number	1. Certified that with reference to the assessment record of ..... bearing Registration Certificate number .....
Date of Order directing refund—	For the period from 19 , to 19 , ... a refund of Rs. ..... is due to	For the period from 19 , to 19 ..... a refund of Rs. ..... is due to
Amount of refund.	.....	.....
Number in collection register showing the collection of amount regarding which refund is made.	2. Certified that the amount of Sales Tax concerning which this refund is allowed has been duly credited to the Government Treasury.	2. Certified that the amount of Sales Tax concerning which this refund is allowed has been duly credited to the Government Treasury.
(Signed) ..... Designation .... Dated	3. Certified that no refund order regarding the sum now in question has previously been granted and this order of refund has been entered in the original file of assessment under my signature.	3. Certified that no refund order regarding the sum now in question has previously been granted and this order of refund has been entered in the original file of assessment under my signature.
Signature of the recipient of the Voucher.	4. Please pay to ..... the sum of Rs. ..... (in figures) (Rupees.....) (in words)	4. Please pay to ..... the sum of Rs. ..... (in figures) (Rupees.....) (in words)
Date of encashment in the Government Treasury.	Date	Date .....
	(Signed)	(Signed) .....
	Designation	Designation .....
	Date of encashment in the Government Treasury.	Date of encashment in the Government Treasury.
	Date .....Place	Date .....Place .....
	Pay rupees .....only.	Pay rupees .....only.
	The .....19 . Treasury Officer.	The .....19 . Treasury Officer.
	Received payment. Claimant's signature.	Received payment. Claimant's signature.

FORM XXI.

Refund Adjustment Order.

(*See* Rule 38.)

Book No. .....

Voucher No. ....

19 19 Refunds.

To

.....

.....

1. Certified with reference to the assessment records of the dealer (Name)..... ..... bearing registration certificate number .... for the period from 19 to 19 a refund of Rs. ..... is due to (Name) ....

2. Certified that the tax concerning which this refund is allowed has been credited to the Treasury.

3. Certified that no refund order regarding the sum in question has previously been granted and this order of refund has been entered in the original file of assessment under my signature.

4. This refund will be adjusted towards the amount of sale-tax due from the said dealer for the ..... 19 –19 , or any subsequent quarter. The dealer shall attach this Order to the return to be furnished by him for the quarter against which the adjustment is desired.

(Signed) .....

Seal.

Designation .....

Date .....

FORM XXII.

Register of Applications for Refund of Sales Tax.

(*See* Rule 41.)

Serial No.	(*i*) Date of application for refund. (*ii*) Date of order of assessment or where an appeal was preferred the date of passing of order by the appellate authority. (*iii*) Period of assessment for which refund is claimed.	Name of the applicant and his registration number.	Address of the applicant.	Amount of refund applied for.
1	2	3	4	5

Amount, if any, ordered to be refunded and the name and designation of the officer allowing the refund.	Method of payment.	No. and date of issue of Refund Payment Order or Refund Adjustment Order and signature of the officer issuing the order.	Date for encashment or adjustment.	Period of assessment towards which the adjustment is made.	
6	7	8	9	10	

FORM XXIII.

Notice under Section 15 (1) of the Bombay Sales Tax Act, 1946.

(*See* Rule 42.)

To

(Name) .....

(Address) .....

Registration No., if any .....

You are required, under sub-section (*1*) of section 15 of the Bombay Sales Tax Act, 1946, to produce *before me the following documents and accounts and/to furnish me with the following information at ..... on .....

(place) before (date).

at (time) .....

.....

.....

Seal.

(Signed) .....

Designation .....

Date .....

*Strike out whichever is not required.

FORM XXIV.

Form of Appeal against an Order of Assessment or Penalty under Section 11 of the Bombay Sales Tax Act, 1946.

(*See* Rule 45.)

To

The .....

.....

The ..... day of ..... 19 ..

Date of order appealed against .....

Name and designation of the officer who passed the order .....

Period of assessment from ..... to .....

	Rs.
Amount of general tax assessed	
Amount of special tax assessed	
Amount of penalty imposed under section 11 (*5*) ..	
Total ..	

The petition of.....
carrying on the business known as.....
bearing registration certificate number.....whose only/
chief place of business in the district of.....is
situated at....., Post Office.....sheweth
as follows :—

1. Under the Bombay Sales Tax Act, 1946, your petitioner has been assessed for a taxable turnover of Rs.....for the general tax and a taxable turnover of Rs.....for the special tax for the period from .....to.....

2. Under sub-section (*5*) of section 11 of the Bombay Sales Tax Act, 1946, a penalty of Rs.....has been imposed on your petitioner.

3. The notice of demand is attached hereto.

4. A certified copy of the order appealed against is attached.

5. Your petitioner has paid all tax assessed and penalty imposed under the order appealed against by treasury Chalan number.....dated the.....19 .

6. Your petitioner's gross turnover, taxable turnover and penalty payable under section 12 (*3-A*) according to the provisions of the Act, of the business places situated in the District of....., for the period from..... to.....were as under :—

General Turnover.....

Taxable turnover subject to :—

(*a*) Gross Tax at the rate of—

(*i*) half anna in the rupee.....

(*ii*) quarter anna in the rupee.....

(*iii*) $\frac{1}{4}$ per cent.....

(*iv*) $\frac{1}{8}$ per cent.....

(*b*) Special tax at the rate of—

(*i*) one anna in the rupee.....

(*ii*) half anna in the rupee.....

7. Such turnover was the whole turnover of your petitioner during the quarter. Your petitioner had no other turnover either taxable or otherwise during the said period.

8. Your petitioner has made a return of his turnover to the office of..... .....under section 10 of the Act and has complied with all the terms of the notice served on him by the.....under section 11 of the Act.

9. Enter here the grounds on which you rely for the purpose of this appeal.

10. Your petitioner, therefore, prays that he may be assessed accordingly or that he may be declared not to be chargeable under the Act or that the assessment may be cancelled and/or remanded to.....for re-assessment or that the order of the.....imposing a penalty under section 11 (*5*) of Rs.....upon your petitioner may be set aside.

Your petitioner.....named above, does hereby declare that what is stated herein is true to the best of his knowledge and belief.

(Signed).....
(To be signed by the appellant or by an agent duly authorised in writing in this behalf by the appellant.)

Note.—Strike out whichever is not required.

FORM XXV.

Form of Application for Revision under Section 22 of the Bombay Sales Tax Act, 1946.

[*See* Rule 48.]

To

The .....

The.....day of.....19 .

Date of order against which the application for revision is submitted.....

Name and designation of the officer who passed the order.....

Period of assessment from.....to.....

	Rs.
Amount of general tax assessed	
Amount of special tax assessed	
Amount of penalty imposed under section 11 (5)	
Total ..	

The petition of.....carrying on the business known as.....bearing registration certificate number.....whose only/chief place of business in the district of.....is situated at.....; Post Office.....sheweth as follows :—

1. Under the Bombay Sales Tax Act, 1946, your petitioner has been assessed for a taxable turnover of Rs .....for the general tax and a taxable turnover of Rs.....for the special tax for the period from.....to.....,

2. Under sub-section (5) of section 11 of the Bombay Sales Tax Act, 1946, a penalty of Rs.....has been imposed on your petitioner.

3. The notice of demand is attached hereto.

4. A certified copy of the order against which the petition for revision is submitted is attached.

5. Your petitioner has paid all tax assessed and the penalty imposed under the order sought to be revised hereby, by treasury Chalan number..... dated, the.....19 .

6. Your petitioner's gross turnover, taxable turnover and penalty payable under section 12(*3A*) according to the provisions of the Act, of the business places situated in the district of.....for the period from..... to.....were as under :—

	Rs.
Gross Turnover	

Taxable Turnover subject to—

(*a*) General tax at the rate of—

(*i*) half anna in the rupee.....

(*ii*) quarter anna in the rupee.....

(*iii*) $\frac{1}{4}$ per cent.....

(*iv*) $\frac{1}{8}$ per cent.....

(*b*) Special tax at the rate of—

(*i*) one anna in the rupee.....

(*ii*) half anna in the rupee.....

7. Such turnover was the whole turnover of your petitioner during the quarter. Your petitioner has no other turnover either taxable or otherwise during the said period.

8. Your petitioner has made a return of his turnover to the office of..... ..... under section 10 of the Act and has complied with all the terms of the notice served on him by the..... under section 15 of the Act.

9. Enter here the grounds on which you rely for the purpose of this revision.

10. Your petitioner, therefore, prays that he may be assessed accordingly or that he may be declared not to be chargeable under the Act or that the assessment may be cancelled and/or remanded to..... for reassessment or that the order of the..... imposing a penalty under section 11 (5) of Rs..... upon your petitioner may be set aside.

Your petitioner.....named above, does hereby declare that what is stated herein is true to the best of his knowledge and belief.

(Signed).....

(To be signed by the petitioner by an agent duly authorised in writing in this behalf by the petitioner.)

Note.—Strike out whichever is not required.

FORM XXVI.

Letter to a Dealer when it is proposed to pass an Order which affects him prejudicially under Section 22 of the Bombay Sales Tax Act, 1946.

(*See* Rule 49.)

To

.....(dealer)

of.....Registration No.....

Whereas it is proposed to pass an order to the effect mentioned below, you are hereby informed that if you wish to prefer any objection against such order you

should attend either personally, or by agent duly authorised for the purpose at the office of the undersigned at..... on the..... .. day of ....19 .

Gist of the order proposed to be passed :—

Seal.

(Signed).....

Designation.....

Date.....

FORM XXVI-A.

Notice under the proviso to section 23A (1) of the Bombay Sales Tax Act, 1946.

(*See* Rule 50-A.)

To

Name ... .

(Address) .....

Registration No., if any ....

WHEREAS it appears that in the $\frac{\text{order}}{\text{decision}}$ No..... dated ..... $\frac{\text{passed}}{\text{given}}$ by.....for the period from..... to.....in your case, there is the following mistake, namely :—

AND WHEREAS it is proposed to rectify the mistake as stated below, which will have the effect of $\frac{\text{enhancing the tax,}}{\text{reducing the amount of a refund,}}$ you are hereby given notice under $\frac{\text{the proviso to sub-section (1) of section 23A}}{\text{sub-section (2) read with the proviso to sub-section (1) of section 23A}}$ of the Bombay Sales Tax Act, 1946, that if you wish to prefer any objection against the proposed rectification, you should attend either personally or by agent duly authoised for the purpose at ..... at ..... on.....the day of.....19 .

Gist of the rectification proposed to be made :—

Seal.

(Signed) .....

Dated.....19 .

Designation .....

FORM XXVII.

Register of Complaints and Prosecutions.

(*See* Rule 54.)

Serial Number.	Dealer's name, address and registration number.	Date of report.	Date of sanction of prosecution.	Designation of officer sanctioning prosecution.	Offence charged.	Date of order for payment of composition money.	Authority making the order for payment of composition money.	Amount of composition money ordered to be paid.
1	2	3	4	5	6	7	8	9

Amount of composition money paid (if any) and date of payment with treasury chalan number.	Court before which complaint is lodged.	Date on which complaint is lodged.	Date of Court's final order.	Nature of Court's final order.	Sentence awarded by Court (if any).	Order passed by the appellate authority.	Remarks.
10	11	12	13	14	15	16	17

FORM XXVIII.

Order directing Acceptance of Composition Money levied under Section 26 of the Bombay Sales Tax Act, 1946.

(*See* Rule 55.)

To

The Officer-in-charge of the Government Treasury
at.....

Whereas in accordance with the provision of section 23 of the Bombay Sales Tax Act, 1946, I have agreed to accept by way of composition the sum of Rs..... (in figures)
(Rupees..... (in words))
from.....(dealer) of.....
(address), you are hereby requested to receive the said sum on my behalf and to place it to the credit of the Consolidated Fund of the State " XIII-Other Taxes and Duties—D-Other Items—Sales Tax ", and to return two receipted chalans to the aforesaid dealer.

Seal.

(Signed).....

Dated.....19 .

Designation.....

MEMORANDUM No.....dated.....19 .

Copy forwarded to .....
for information with reference to his application dated the.....19 .
He is directed to submit a copy of the receipted chalan/money-order acknowledgement to the Sales Tax Officer..... and to report compliance to the undersigned by the.....19 .

(Signed).....

Seal.

Designation.....

MEMORANDUM No. .....dated.....19 .

Copy forwarded to the Sales Tax Officer, for information and necessary action.

(Signed).....

Seal.

Designation.....

APPENDIX A.

S. 4 (4) Bombay Sales Tax Tribunal Regulations, 1948.

G. N., F. D., No. 6513/33-S.T., dated 6th August 1948 (B. G., Pt. IV-B, p. 659).

The following regulations made by the Tribunal constituted under section 4 of the Bombay Sales Tax Act, 1946 (Bom. V of 1946), read with the Bombay Sales Tax (Repeal and Re-enactment) Act, 1948 (Bom. XXIV of 1948), in exercise of the powers conferred on it by sub-section (*4*) of the said section 4 and with the previous sanction of the Government of Bombay, are hereby published as required by sub-section (*5*) of the said section 4 :—

REGULATIONS.

CHAPTER I.

General.

1. *Short title.*—These regulations may be called the Bombay Sales Tax Tribunal Regulations, 1948.

2. *Definitions.*—In these regulations, unless there is anything repugnant in the subject or context,—

(*a*) " Act " means the Bombay Sales Tax Act, 1946, read with the Bombay Sales Tax (Repeal and Re-enactment) Act, 1948 ;

(*b*) " appeal " means a memorandum of appeal to the Tribunal filed under section 21 of the Act ;

(*c*) " application for revision " means an application for revision made to the Tribunal under section 22 of the Act ;

(*d*) " application for reference " means an application made under section 23 requiring the Tribunal to refer to the High Court any question of law ;

(*e*) " Form " means a form appended to these regulations ;

(*f*) " Government agent " means an officer or pleader appointed by Government to receive on its behalf notices issued by the Tribunal and generally to appear, act and plead on its behalf in all proceedings before the Tribunal ;

(*g*) " legal representative " means a person who in law represents the estate of a deceased person and includes any person decided by the Tribunal to represent the deceased person in the proceedings pending before the Tribunal, unless and until a competent court has decided otherwise ;

(*h*) " pleader " means a pleader as defined in section 2 (*15*) of the Code of Civil Procedure, 1908 ;

(*i*) " President " means the President of the Tribunal ;

(*j*) " Registrar " means the person who is for the time being discharging the functions of the Registrar of the Tribunal ;

(*k*) " Rules " means the Bombay Sales Tax Rules, 1946, and the word " rule " shall be construed accordingly ;

(*l*) " Tribunal " means the Tribunal constituted under section 4 of the Act ;

(*m*) Words and expressions used but not defined in these regulations shall have the meanings assigned to them in the Act and the Rules.

CHAPTER II.

Sittings and office hours.

3. *Place of hearing.*—(1) The headquarters of the Tribunal shall be at Bombay.

(2) All appeals and applications for revision and reference shall ordinarily be heard at Bombay :

Provided that the Tribunal may, by reason of the great number of such appeals or applications in respect of any area or for any other reason, hear them at any other convenient place in the State of Bombay.

(3) Sufficient notice about the sitting of the Tribunal outside Bombay shall be given by publication on the notice board of the Tribunal and in any two newspapers having circulation at the place where the sitting is to be held.

4. *Notice of date of hearing.*—The Registrar shall, with the approval of the President, arrange for the sittings of the Tribunal for hearing the appeals and applications for revision and reference and publish the days fixed for the hearing thereof on the notice board of the Tribunal sufficiently in advance.

5. *Office hours.*—The office of the Tribunal shall observe the same office hours as the other offices of the State Government. It shall remain closed on Sundays and such holidays as may be declared by Government for such offices.

CHAPTER III.

Presentation, registration and admission of appeals and applications.

6. *Presentation of appeals and applications.*—(1) An appeal or an application for revision or reference shall be presented in person by the appellant or applicant, as the case may be, or by his pleader or duly appointed agent to the Registrar during office hours or sent to him by registered post.

(2) When such appeal or application is presented by a pleader or an agent, other than Government agent whose appointment as such agent has been notified in the *Official Gazette*, it shall be accompanied by a letter of authority appointing him as such.

(3) Every such appeal or application shall be made in accordance with the provisions of the Act, the Rules and these regulations and shall be accompanied by the fees prescribed under the Rules.

(4) An appeal shall be accompanied by a duplicate copy of the chalan showing that the tax, with penalty, if any, has been paid.

(5) An application for reference shall clearly set out the question of law required to be referred to the High Court and the manner in which it arises and give concisely the reasons for urging that the Tribunal has ignored it or wrongly decided it. Every such application when made by a dealer shall be accompanied by the fee prescribed under sub-section (*1*) of section 23 of the Act.

(6) Every appeal or application shall be accompanied by one certified copy and two uncertified copies of the order complained of and by two copies of the appeal or application, unless the production of any such copy is dispensed with by the President.

(7) Every appeal or application by a dealer shall specify the name and address of the appellant or the applicant and specify the Government of Bombay as the respondent or the opponent, as the case may be. Where Government is the appellant or the applicant, the name and address of the respondent or the opponent, as the case may be, shall be specified in the appeal or application, so far as they can be ascertained.

7. *Registration of appeals and applications.*—(1) On receipt of an appeal or an application for revision or reference, the Registrar shall endorse on it the date of its receipt. The Registrar shall, as soon as possible, examine it and see—

(*i*) that the person presenting it has authority to do so ; and

(*ii*) that it conforms with all the provisions of the Act, the Rules and these regulations.

If the Registrar is satisfied on these points, he shall cause it to be registered in the appropriate register maintained under regulation 8.

(2) If the Registrar finds that the appeal or application presented to him does not conform with any of the said provisions or is not accompanied by the requisite fees, he shall make a note on the appeal or application to that effect and may call upon the party concerned or his pleader or his agent to remedy the defect within a period of 7 days of the receipt of notice to do so. The Registrar may, for good and sufficient cause, extend the period for the purpose of remedying the defect, provided that if the extension of more than seven days in the aggregate is sought for, the Registrar shall place the matter before the President and obtain his orders in that behalf.

(3) If the defect is remedied within the period allowed under sub-regulation (2), the Registrar shall cause the appeal or application, as the case may be, to be registered in the appropriate register.

(4) If the party concerned or his pleader or his agent fails to remedy the defect within the said period the Registrar shall make his report to the Tribunal and, with the approval of the President, fix a date for the hearing, of which due notice shall be given to the party or his pleader or his agent.

(5) On the date so fixed, the Tribunal shall go through the relevant papers, hear the party, or his pleader or his agent, if present and pass suitable orders directing that the appeal or application be registered or rejecting it. Where the appeal or application is rejected, the Tribunal shall record its reasons for doing so.

(6) When an appeal or application has been ordered to be registered under this regulation the Registrar shall see that it is registered as soon as practicable and in any case not later than seven days from the date of the order requiring it to be registered.

8. *Maintenance of Registers.*—The Registrar shall maintain separate registers for—

(*i*) appeals in Form A ;

(*ii*) applications for revision in Form B ; and

(*iii*) applications for reference in Form C.

9. *Intimation of registration to the Commissioner.*—When any appeal or application has been registered under regulation 7, the Registrar shall, as soon as may be, send an intimation thereof in Form D to the Commissioner calling for the record and proceedings relating to such appeal or application, unless the papers are already in the office of the Tribunal.

10. *Admission.*—(1) On receipt of the record and proceedings of the appeal or application, as the case may be, the President shall go through the papers and if he is of the opinion that there is substance in the appeal or application, he shall admit it.

(2) If the President is of the opinion that there is no substance in such appeal or application, he shall direct that it be placed before the Tribunal for preliminary hearing on a date fixed by him of which notice shall be given to the appellant or applicant, as the case may be, or to his pleader or his agent.

(3) A notice under sub-regulation (2) shall declare that if the parties do not appear before the Tribunal either in person or through a pleader or an agent on the date mentioned in the notice, the appeal or application, as the case may be, shall be heard and decided *ex-parte*.

(4) On the date so fixed the Tribunal shall, after hearing the appellant or applicant, as the case may be, or his pleader or his agent, pass orders either admitting the appeal or application or dismissing it. Where the appeal or application is dismissed, the Tribunal shall record its reasons for doing so.

(5) Where the appellant or applicant or his pleader or his agent, as the case may be, is absent on the date fixed for hearing, the Tribunal may dismiss the appeal or application or pass such orders as it deems just and proper.

CHAPTER IV.

Hearing, Adjournment and Judgment.

11. *Notice to respondent or opponent.*—After any appeal or application has been admitted a notice shall be delivered or sent by post to the respondent or opponent calling upon him to appear before the Tribunal on the date specified in the notice. The notice shall also declare that if he does not appear before the Tribunal either in person or through a pleader or an agent on the date specified in the notice or on any subsequent date to which the hearing may be adjourned, the Tribunal shall hear and decide the appeal or application *ex-parte*.

12. *Procedure at the hearing.*—On the date fixed or on any other day to which the hearing may be adjourned, the appellant or applicant or his pleader or his agent, shall ordinarily be heard first in support of his appeal or application. The respondent or the opponent or his pleader or his agent shall, if necessary, be heard next and in such case the appellant or applicant or his pleader or his agent shall be entitled to reply.

13. *Hearing in the absence of parties.*—(1) If, on the day fixed for hearing or on any other day to which the hearing may be adjourned, the appellant or applicant does not appear either in person or through his pleader or his agent when the appeal or application is called for hearing, the Tribunal may dismiss the appeal or application or may decide it on merits, after hearing the respondent or opponent or his pleader or his agent, if present.

(2) If, on the day fixed for hearing or on any other day to which the hearing may be adjoured, the respondent or opponent does not appear either in person or through his pleader or his agent when the appeal or application is called for hearing, the Tribunal may decide the same on merits, after hearing the appellant or applicant or his pleader or his agent, if present.

14. *Restoration of appeals and applications decided ex-parte.*—If any of the parties was absent at the date of the hearing, either preliminary or final, and the appeal or application was heard and decided *ex-parte*, the party concerned may apply for a restoration of the appeal or application and if the party satisfies the Tribunal that he had no notice of the date of the hearing or that he was prevented by any sufficient cause from appearing when the appeal or application was called for hearing, the Tribunal may restore the appeal or application to its file, provided that where the other party had appeared in the appeal or application, such party shall be given notice and an opportunity of being heard before the order for restoration of the appeal or application is made.

15. *Fresh evidence and witnesses.*—(1) No party to an appeal or application for revision or reference shall be entitled to adduce fresh evidence, whether oral or documentary, before the Tribunal. The Tribunal may accept documents tendered by a party or call for them, if it is of opinion that they are necessary for deciding the appeal or application: provided that the other party shall in that case be entitled to produce rebutting evidence.

(2) If the Tribunal is of opinion that any witness should be examined, it may, instead of examining him before itself, ask the Commissioner to have him examined by the Assistant Commissioner of Sales Tax or the Sales Tax Officer of the area from which the appeal or application is received and submit his deposition.

(3) Where fresh evidence has been adduced under sub-regulation (1) or a witness has been examined, as provided in sub-regulation (2), the parties, may, if they so desire, address the Tribunal on points arising out of the fresh evidence or the deposition of the witness.

16. *Adjournment.*—The Tribunal may on such terms as it thinks fit, and at any stage adjourn the hearing of any appeal or application.

17. *Procedure in case of death of one of several appellants or applicants or of sole appellant or applicant.*—If an appellant or applicant dies while the appeal or application is pending and it cannot be proceeded with unless his legal representative is made a party to the appeal or application, the Tribunal shall adjourn further proceedings to enable his legal representative to appear and apply for being made a party. If the legal representative fails to do so within ninety days from the date on which the appellant or applicant died, the appeal or the application shall abate as regards the deceased and if he be the sole appellant or applicant the appeal or application shall be dismissed. Otherwise, it shall be proceeded with as regards the remaining appellants or applicants.

18. *Procedure in case of death of one of several respondents or opponents or of sole respondent or opponent.*—If a respondent or opponent dies while the appeal or application is pending and it cannot be proceeded with unless his legal representative is made a party to the appeal or application, the appellant or the applicant shall apply to the Tribunal for making the legal representative of such respondent or opponent a party to the appeal or application within ninety days from the date on which the respondent or opponent died. If the appellant or applicant fails to do so, the appeal or application shall abate as regards the deceased. If the deceased be the sole respondent or opponent, the appeal or application shall be dismissed. Otherwise, it shall be proceeded with as regards the remaining respondents or opponents.

19. *No abatement by reason of death after hearing.*—Notwithstanding anything contained in regulations 17 and 18, there shall be no abatement by reason of the death of any party, between the conclusion of the hearing and the pronouncing of the judgment, but the judgment may in such case be pronounced notwithstanding the death and shall have the same force and effect as if it had been pronounced

before the death took place. No legal representative need be made party in such case.

20. *Determination of legal representative.*—If a question arises in any appeal or application whether a person is or is not the legal representative of a deceased party, such question may be determined by the Tribunal in a summary way after taking evidence, if necessary.

21. *Procedure in case of assignment.*—In any case where the business of a dealer who is a party to an appeal or application before the Tribunal is, during the pendency of it, assigned or devolved wholly or in part to or upon some other person, the appeal or application may, by leave of the Tribunal, be continued by or against such person.

22. *Procedure in case of insolvency.*—If a dealer, who is a party to an appeal or application, becomes insolvent and his estate becomes vested in the assignee or receiver, the latter may, by leave of the Tribunal, be made a party to the appeal or application.

23. *Abatement or dismissal for failure of legal representative, etc., to apply in time may be set aside.*—A person claiming to be the legal representative of a deceased appellant or applicant or the assignee or receiver of an insolvent appellant or applicant may apply within sixty days from the date of abatement or dismissal of the appeal or application to have the abatement or dismissal set aside and if it is proved to the satisfaction of the Tribunal that he was prevented by sufficient cause from appearing within time, the abatement or dismissal shall be set aside by the Tribunal and the appeal or application be proceeded with.

24. *Benches.*—(1) The President shall have power to constitute benches from among the members of the Tribunal, including himself, to hear any appeal or application. Every appeal, application for revision or application for reference shall be heard by a bench :

Provided that any interlocutory application during the hearing of such appeal or application may be heard by a single member of the bench.

(2) Such benches shall consist of two or more members, including the President. Where a bench consists of three members, the opinion of the majority shall prevail and decision shall be in accordance with the opinion of the majority. Where a bench consists of two members and if the two members differ, the appeal or application shall be referred for hearing to the third member who was not party to the original decision.

25. *Pronouncement of judgment.*—(1) When the hearing of an appeal or application is complete, the Tribunal shall pronounce its judgment forthwith or shall fix a date for the same. Such date shall be notified on the notice board of the Tribunal.

(2) Every judgment of the Tribunal shall be in writing.

26. *Unanimous or majority judgment.*—Where the judgment is unanimous, it shall be signed and dated by all the members in open court. Where it is a judgment of the majority, it shall be similarly signed and dated by the members forming the majority. The dissenting member shall also write his judgment and record his opinion on the point or points on which he dissents.

27. *Certain matters to be specified in the judgment.*—The Tribunal shall, in its judgment, state at the end, whether the appeal or application is dismissed or allowed wholly or in part and mention the relief, if any, granted to the appellant applicant.

28. *Judgment to contain statement of case to High Court.*—In its judgment on an application for reference, the Tribunal shall give a concise but clear statement of the facts leading to the application and shall formulate with precision the question of law to be referred to the High Court for decision.

29. *Costs.*—(1) The costs of the appeal or application shall be in the discretion of the Tribunal.

(2) In its final order the Tribunal shall state who shall bear the costs and in what proportion, if any.

(3) A bill of costs shall be drawn up by the Registrar in Form E, and attached to the judgment.

30. *Supply of certified copies of judgment to Commissioner and other party.*—A certified copy of every judgment of the Tribunal shall be forwarded to the Commissioner as soon as practicable. A certified copy of it shall also be supplied free of cost and without application to the other party to the appeal or application.

CHAPTER V.

Miscellaneous.

31. *Copies of documents on payment of fees.*—(1) Any party to the appeal or application before the Tribunal may apply to the Registrar for a certified copy of any document (including the judgment) in the record of the appeal or application to which he is a party.

(2) The application shall be accompanied by deposit of an amount to cover the cost of preparing copies according to the following scale of copying fees, namely :—

(*a*) for the first 200 words or less—

English	12 as.
Vernacular	6 as.

(*b*) For every additional 100 words or fraction thereof—

English	6 as.
Vernacular	3 as.

A uniform extra fee of Re. 1 shall be charged on an application for copies required urgently. The amount calculated according to the above scale shall be retained by the Registrar as copying fees and the surplus amount, if any, deposited by the party shall be refunded to him at the time of supplying the copy : provided that the party shall, if the amount deposited by him is not sufficient to cover copying fees, pay the deficit before taking delivery of the copy.

(3) If the Registrar feels any doubt about the propriety of granting a copy of any such document, he shall place the application before the President and act in accordance with the orders of the President.

(4) Persons who are not parties to an appeal or application may be supplied with a copy of any such document only under the orders of the President and on payment of the copying fees.

32. *Forms of notices.*—Forms F to J with suitable modifications shall be used for the purpose of the notices to be issued by the Tribunal.

33. *Service of notices on Government.*—Notices required to be served on Government shall be served on Government agent and pending his appointment on the Commissioner.

34. *Service of notices in general.*—(1) The notices required to be issued to the parties under the Act or these regulations shall be served in the manner provided in rule 51, subject to the modification that the words "by post" in the said rule shall mean by registered post with acknowledgment due. An acknowledgment containing the signature of the addressee or his pleader or his agent or an endorsement by the postal authorities to the effect that the notice was refused by the addressee shall, unless the contrary is proved, be deemed to be sufficient to hold that the notice was duly served.

(2) Where the Tribunal is satisfied that the addressee is evading service or that it is not possible to serve the notice in the ordinary way, it may direct that a copy of the notice should be affixed on its notice board and another copy on the outer door or some other conspicuous part of the dealer's office or place of business last notified by the dealer.

FORM A.

(*See* Regulation 8.)

THE SALES TAX TRIBUNAL, BOMBAY.

Register of Appeals.

Serial No.	Names of parties and their pleaders or agents, if any.	Date of the decision of the Commissioner.	Date of filing the appeal.
1	2	3	4

Date of appearance of the respondent, his pleader or his agent.	Date of decision by the Tribunal.	Final order passed by the Tribunal.	Whether decided unanimously or by majority.	Remarks.
5	6	7	8	9

FORM B.

(*See* Regulation 8.)

THE SALES TAX TRIBUNAL, BOMBAY.

Register of Applications for Revision.

Serial No.	Names of parties and their pleaders or agents, if any.	Date of the decision of the Commissioner.	Date of filing the application.
1	2	3	4

Date of appearance of the opponent, his pleader or his agent.	Date of decision by the Tribunal.	Final order passed by the Tribunal.	Whether decided unanimously or by majority.	Remarks.
5	6	7	8	9

FORM C.

(*See* Regulation 8.)

THE SALES TAX TRIBUNAL, BOMBAY.

Register of Applications for Reference.

Serial No.	Names of parties and their pleaders, or agents, if any.	Date of the original decision of the Tribunal.	Date of filing the application.
1	2	3	4

Substance of the application.	Date of the order of the Tribunal on the application.	The order passed by the Tribunal.	Whether passed unanimously or by majority.	Remarks.
5	6	7	8	9

FORM D.

(*See* Regulation 9.)

BEFORE THE SALES TAX TRIBUNAL OF THE STATE OF BOMBAY.

Appeal / Application No. of 19 .

Appellant. / Applicant.

versus

Respondent. / Opponent.

To

The Commissioner of Sales Tax,
Bombay.

Please take note that the abovenamed appellant / applicant has filed an appeal / application for revision / application for reference before the Tribunal against your decision in appeal / application No. of 19 (of your file). You are requested to send the record and proceeding of the above appeal / application with all practicable despatch.

Given under my hand and the seal of the Tribunal.
(Date).

By order,

Seal.

Registrar.

FORM E.

(*See* Regulation 29.)

BILL OF COSTS (TO BE ATTACHED TO THE JUDGMENT.)

Sales Tax Tribunal Appeal / Application No. of 19 .

Appellant. / Applicant.

versus

Respondent. / Opponent.

For the Appellant. / Applicant.	For the Respondent / Opponent.

Prepared by

Clerk.

Examined by

Clerk.

(Date)

Seal.

By order,

Registrar.

FORM F.

(*See* Regulation 32.).

BEFORE THE SALES TAX TRIBUNAL OF THE STATE OF BOMBAY.

Appeal/Application No. of 19 .

Appellant./Applicant.

versus

Respondent./Opponent.

To

The abovenamed Appellant./Applicant.

You have filed an appeal/application for revision/reference against the order of the Commissioner of/the Tribunal in the Sales Tax, Bombay, in appeal/application No. of 19 of his file./abovementioned appeal/application. It does not comply with provisions of the Bombay Sales Tax Act, 1946, and the rules and regulations made thereunder in the following respects :—

2. You are hereby required to remedy the defects within 7 days of the receipt of this notice by you. If you fail, the matter will be placed for orders before the Tribunal.

Given under my hand and the seal of the Tribunal.

(Date).

By order,

Seal.

Registrar.

FORM G.

(*See* Regulation 32.)

BEFORE THE SALES TAX TRIBUNAL OF THE STATE OF BOMBAY.

Appeal/Application No. of 19 .

Appellant./Applicant.

versus

Respondent./Opponent.

To

The abovenamed Appellant./Applicant.

Take notice that the appeal/application for revision/reference filed by you against the decision of/the order of the the Commissioner of Sales Tax, Bombay, in Appeal/Application No. of Tribunal in the abovementioned Appeal/Application. 19 , of his file has been placed before the Tribunal for orders as it is defective as already intimated to you. The Tribunal will hear the matter on . If you want to be heard, you should be present at the time of the hearing in person or through duly appointed pleader or agent. If you fail to do so, the Tribunal will pass suitable orders in your absence.

Given under my hand and the seal of the Tribunal.

(Date). By order,

Seal.

Registrar.

FORM H.

(*See* Regulation 32.)

BEFORE THE SALES TAX TRIBUNAL OF THE STATE OF BOMBAY.

Appeal/Application No. of 19 .

Appellant./Applicant.

versus

Respondent./Opponent.

To

The abovenamed Appellant./Applicant.

Take notice that the above Appeal/pplica ion for revision/reference has been set down for

hearing by the Tribunal on to decide whether the appeal/application should be admitted or not, and that you should attend on that day personally or through your duly appointed pleader or agent. On your failure to do so, the Tribunal will hear and decide the appeal/application *ex parte*.

Given under my hand and the seal of the Tribunal.

(Date). By order,

Seal.

Registrar.

FORM I.

(*See* Regulation 32.)

BEFORE THE SALES TAX TRIBUNAL OF THE STATE OF BOMBAY.

Appeal/Application No. of 19 .

Appellant./Applicant.

versus

Respondent./Opponent.

To

The abovenamed Respondent/Opponent.

Take notice that the abovenamed Appellant/Applicant has filed an Appeal/Application for revision/reference before this Tribunal against the decision of the Commissioner of Sales Tax, Bombay, in Appeal/Application No. of 19 of his file/against the order of the Tribunal in the above mentioned Appeal/Application and that the Tribunal has fixed as the date for hearing. The Tribunal will hear it on that day or on a subsequent date to which it may adjourn it, after notifying the date on the notice board.

If you do not appear on the above date or dates, personally or through duly appointed pleader or agent the Tribunal will hear and decide the appeal *ex parte*.

Given under my hand and the seal of the Tribunal.

(Date). By order,

Seal.

Registrar.

FORM J (GENERAL).

(*See* Regulation 32.)

BEFORE THE SALES TAX TRIBUNAL OF THE STATE OF BOMBAY

Appeal / Application No. of 19 .

Appellant. / Applicant.

versus

Respondent. / Opponent.

To

The

This is to give you notice that

Given under my hand and the seal of the Tribunal.

(Date).

By order,

Seal.

Registrar.

Bombay, 19 .

THE BOMBAY SALES OF MOTOR SPIRIT TAXATION ACT, 1946 (BOM. VI OF 1946).

G. N., R. D., No. 2305/45, dated 9th July 1948 (B. G., Pt. IV-B, p. 457).

25 Bombay Sales of Motor Spirit Taxation Rules, 1948.

In exercise of the powers conferred by section 25 of the Bombay Sales of Motor Spirit Taxation Act, 1946 (Bom. VI of 1946), and in supersession of the Bombay Motor Spirit Sales Tax Rules, 1939, the Government of Bombay is pleased to make the following rules, namely :—

1. *Title.*—These rules may be called the Bombay Sales of Motor Spirit Taxation Rules, 1948.

2. *Definitions.*—In these rules, unless there is anything repugnant in the subject or context—

(*a*) "Act" means the Bombay Sales of Motor Spirit Taxation Act, 1946 ;

(*b*) "form" means a form appended to these rules ;

(*c*) "licensing authority" means the Collector or any officer authorised by him in this behalf ;

(*d*) "manager or agent" means the person authorised by the trader with the approval of the licensing authority to act as his manager or agent for all or any of the purposes of these rules ;

(*e*) "section" means a section of the Act ;

(*f*) "tax" means the tax on sales of motor spirit levied under section 3 ;

(*g*) words and expressions not defined in these rules shall have the meanings assigned to them under the Act.

3. *Application for licence.*—Any person desirous of obtaining or renewing a licence under section 6 shall submit an application in Form A to the licensing authority of the area in which his place of business is situate.

4. *Form and particulars of licence.*—Every licence shall be in form B or D, as the case may be, and shall be subject to the conditions and restrictions therein specified and to the provisions of these rules.

5. *Fee for grant or renewal of licence.*—(1) A fee of Rs. 2 shall be imposed for the grant or renewal of every licence. Such fee shall be paid by every applicant into a Government Treasury or a Sub-Treasury or into the Reserve Bank of India on Government account or sent by money-order to the licensing authority.

(2) No application for the grant or renewal of a licence shall be entertained unless the amount of the licence fee is so paid or sent.

6. *Amendment of licence.*—(1) Any licence granted under these rules may at any time be amended by the licensing authority, provided that no such amendment shall be inconsistent with the provisions of the Act or of these rules.

(2) Any trader desirous of having his licence amended shall submit the licence to the licensing authority along with an application stating the nature of the amendments desired and the reasons therefor.

7. *Renewal of licence.*—(1) A licence may be renewed by the licensing authority by whom the original licence was granted.

(2) Every application for the renewal of a licence shall be made not less than thirty days before the day on which the licence expires.

(3) If an application for renewal of a licence is made within the time specified in sub-rule (2) the licence shall be deemed to be renewed until the licence is actually renewed or in case it is rejected until such rejection is duly communicated to the trader.

8. *Suspension or cancellation of licence.*—Every licensing authority ordering the suspension or cancellation of any licence under section 13 shall record his reasons for such order and shall, if so requested, furnish a copy of such order together with the reasons for it to the holder of the licence.

9. *Transfer of licence and partnership.*—(1) Every licence granted under these rules shall be deemed to have been granted personally to the trader named therein.

(2) No such trader shall sell or otherwise transfer, or enter into a partnership with any person for the working of such licence without a written permission granted by the licensing authority. The permission so granted shall be endorsed on the licence.

(3) Every such transferee or partner shall be bound by all the conditions of the licence, provided that in the case of a partnership the original trader shall also continue to be personally liable for payment of the tax.

10. *Procedure on death or disability of trader.*—If any trader holding a licence dies or becomes insolvent or mentally incapable or is otherwise disabled the person carrying on the business of such trader shall not be liable to any penalty under the Act or these rules for doing any act which such trader was authorised to do by or under the licence during such time as may reasonably be required by uch person to make an application for the transfer of the licence in his own name for the unexpired period of the licence.

11. *Loss of licence.*—When any licence granted under these rules is lost or is destroyed or if a holder so desires a duplicate copy thereof may be furnished to the holder by the licensing authority on payment of a fee of one rupee.

12. *Production of licence on demand.*—Every person holding or acting under a licence granted under hese rules shall produce the same or a copy thereof furnished to him under rule 11 at the shop or place of business in respect of which the licence is granted whenever called upon to do so by an officer duly empowered in this behalf.

13. *Rate of tax payable by trader.*—(1) Every retail trader shall pay the tax on the retail sales of motor spirit at the rate of two annas per gallon, if the sale price per gallon is one rupee or more and at the rate of 12½ per cent. of such price, if the sale price per gallon is less than one rupee :

Provided that in calculating the amount of the tax payable, the fraction of a pie shall not be taken into account.

(2) Any trader purchasing motor spirit for re-sale and consuming either the whole or part of it without such resale shall pay the tax on the amount of the purchase price at the rates specified in sub-rule (1).

14. *Every trader to furnish return of sales of motor spirit.*—(1) Every wholesale trader shall, within thirty days of the close of each calendar month, submit to the licensing authority a return in Form " C " of all motor spirit sold or consumed by him during the month and every retail trader shall likewise, within thirty days of

the close of each calendar month, submit to the licensing authority a return in Form " E " of all motor spirit sold or consumed by him during the month.

(2) Every wholesale trader shall, along with the return in Form " C " and every retail trader shall, along with the return in Form " E " furnish evidence of his having paid the amount of the tax mentioned in such return into the Government Treasury or a Sub-Treasury of the district or into the Reserve Bank of India on Government account or of his having sent the amount of the tax by money-order to the licensing authority.

(3) Nothing in this rule shall apply in case of motor spirit consumed by an importer direct.

15. *Every retail trader to keep and maintain accounts.*—Every retail trader shall keep and maintain daily accounts in Form " F " of the value of motor spirit purchased, sold or consumed by him and shall submit monthly statements in the said form to the licensing authority by the first week of the following month.

16. *Procedure in case of non-payment of tax.*—(1) If any trader fails to pay the amount of tax referred to in sub-rule (2) of rule 14, the licensing authority shall cause a notice in Form " G " to be served on the licensee requiring him to pay the aforesaid tax within fifteen days of the date of service of the said notice.

(2) Every notice under sub-rule (1) may be served on a licensee by delivering it to him personally at his ordinary place of business or if the licensee is not found at such premises, by delivering it to any person in the employ of the licensee who may be found at such premises or if no such person is found there, by leaving it at such premises or by affixing it in a conspicuous position upon some building or erection in the occupation of the licensee at such premises.

(3) If such tax is not paid within the time stated in the notice referred to in sub-rule (1) the licensing authority may proceed to recover from him the sum leviable under the provisions of sub-section (3) of section **3.**

17. *Deposit equal to probable amount of tax may be required.*—The Collector may, at any time, in any month, call upon any person holding a retail traders' licence in Form " D " to deposit in cash or in Government securities or in Post Office Cash Certificates an amount equal to the probable amount of the tax payable by him for that month. If such holder fails to pay the amount of the tax within the due period, such amount may be recovered from the amount so deposited and in such event the holder shall forthwith make good the deficit in the amount deposited, or deposit a fresh amount, as the case may be.

18. *Investigating officer.*—Every police officer not below the rank of a Sub-Inspector of Police shall have the powers referred to in section 14 of the Act and also the power to investigate all offences punishable under the Act.

19. *Fine for contravention of these rules.*—Any person contravening any of the provisions of these rules, shall on conviction, if such offence is not otherwise punishable under the Act, be liable to a fine which may extend to Rs. 50.

Forms.

FORM A.

(*See* Rule 3.)

Application for the grant/renewal of a licence to deal in motor spirit.

The replies to be written in this column.

1. Full name of the applicant*

   Occupation

   Address (in full)

2. Situation of the shop or place of business—

   Town or village (and name of street and house No. in the case a town)

   Taluka

   District

3. Nature of the licence applied for—

   Wholesale trader
   †Retail trader

4. Estimated quantity of motor spirit

expected to be $\frac{\text{sold}}{\text{purchased}}$ during the year—

5. Remarks

Signature of the applicant

Date of application

*In case the application is made on behalf of a Company the name and the address of the Company and the name of the Manager or agent should be given.

†*Note.*—In cases where retail sale is also made by an importer direct to certain consumers, e.g., Military authorities, the importer should also apply for a licence as a retail trader, which shall be valid for the whole of the State.

FORM B.

Wholesale.

LICENCE No.

(*See* Rule 4.)

Form of licence for wholesale of motor spirit.

Name of the wholesale trader

Occupation

Address

is hereby granted a licence subject to the provisions of the Bombay Sales of Motor Spirit Taxation Act, 1946 (Bom. VI of 1946) (hereinafter called " the said Act "), and the rules thereunder conferring on him the privilege of selling by wholesale sale motor spirit in—

Situation of the shop or place of business—

Town or village (in the case of a town mention street and house No.)

Taluka

District

for the period from 19 to 31st March 19 , both days inclusive, subject to the conditions hereinafter mentioned, viz. :—

1. That the licensee, if he desires to sell motor spirit by retail sale, shall obtain a separate licence therefor on payment of the prescribed fee and such retail sales shall be governed by the conditions laid down in such separate licence. Such separate licence shall be valid for the whole of the State of Bombay.

2. That the licensee shall be responsible for all acts of his manager, agent or servant.

3. That the licensee shall keep and maintain such records and books of accounts as will admit of ready comparison to the satisfaction of the licensing authority with the entries made in the return prescribed in rule 14 of the Bombay Sales of Motor Spirit Taxation Rules, 1948, and shall submit to the licensing authority, monthly statements in Form " C " within thirty days of the close of the preceding month in respect of the sales effected by him during the said month.

4. That the licensee shall afford all facilities for the checking of his stock and shall, at all reasonable times, produce for inspection, accounts or other documents and shall furnish fully and correctly any information in his possession as may be required for the purposes of the said Act by the Collector or any officer authorised by him in this behalf.

5. That the licensee shall at the end of each month pay to Government tax payable by him under rule 13 (2) of the Bombay Sales of Motor Spirit Taxation Rules, 1948.

6. That the licence shall be suspended or cancelled at any time for breach of any of the aforesaid conditions or of any of the provisions of the said Act or the rules made thereunder.

Dated this day of 19 .

Official seal of the licensing authority.

Licensing Authority.

Renewal Endorsements.

Date of renewal.	Date of expiry.	Licence fee levied.	Signature of licensing authority.

FORM C.

(*See* Rule 14.)

Particulars of motor spirit sold and consumed during the month ended 19 .

Name of Licensee Wholesale Licence No.

Quantity of motor spirit sold to each trader in the State of Bombay during the month.	Names, addresses and licence numbers of the traders to whom motor spirit has been sold.	Quantity* of motor spirit issued for consumption by motor vehicles owned or hired by the licensee.	Price of motor spirit referred to in column 3.	Tax payable to Government on the quantity of motor spirit in column 3 on the prices mentioned in column 4 at the rate of two annas per gallon if the price is one rupee or more per gallon and at 12½ per cent. if the price is less than one rupee per gallon.	Challan No. and date or reference to evidence of payment to Government of the tax mentioned in column 5.
1	2	3	4	5	6
Total ..					

* This shall not apply to consumption direct by an importer.

I do hereby declare that I have compared above particulars with my records and books and that they are, in so far as I can ascertain, accurate and complete.

Dated this day of 19 .

Signature of the wholesale trader or his manager or agent.

MO-III Bk H 160—71

FORM D.

Retail.

LICENCE No.

(*See* Rule 4.)

Form of licence for retail sales of motor spirit.

Name of the retail trader

Occupation

Address

is hereby granted licence subject to the provisions of the Bombay Sales of Motor Spirit Taxation Act, 1946 (Bom. VI of 1946), (hereinafter called "the said Act"), and the rules thereunder conferring on him the privilege of selling by retail sale motor spirit in—

Situation of the shop or place of business—

Town or village (in the case of town mention street and house number).

Taluka

District

for the period from 19 to 31st March 19 , both days inclusive, subject to the conditions hereinafter mentioned viz. :—

1. That the licensee shall have constantly fixed upon a conspicuous part of the front of his shop or place of business a signboard bearing in legible characters in the language of the district or in English his name, the licence number and the words "Licensed to sell motor spirit by retail sale".

2. That the licensee shall be responsible for all acts of his manager, agent or servant.

3. That the licensee shall keep and maintain a correct account of the quantity and value of motor spirit purchased* and* sold by him in such form as will admit of ready comparison to the satisfaction of the licensing authority with the entries made in the return prescribed in rule 14 of the Bombay Sales of Motor Spirit Taxation Rules, 1948, and shall submit to the licensing authority monthly statements in form "E" within thirty days of the close of the preceding month in respect of the sale effected by him in the said month.

4. That the licensee shall afford all facilities for the checking of his stock and shall at all reasonable times, produce for inspection accounts or other documents and shall furnish fully and correctly any information in his possession as may be required for the purposes of the said Act by the Collector or any officer authorised, by him in this behalf.

* To be omitted in the case of a licence for retail sale by an importer.

5. That the licensee shall, at the end of each month, pay to Government tax payable by him under rule 13 of the Bombay Sales of Motor Spirit Taxation Rules 1948.

6. That the licence shall be suspended or cancelled at any time for breach of any of the aforesaid conditions or any of the provisions of the said Act or the rules made thereunder.

7. That the licensee shall, if called upon by the licensing authority to do so at any time, deposit in cash or in Government Securities or in Post Office Cash Certificates an amount equal to the probable amount of the tax payable by him in the month.

Dated this day of 19

Seal of the licensing authority.

Licensing Authority.

Renewal Endorsements.

Date of renewal.	Date of expiry.	Licence fee levied.	Signature of licensing authority.

FORM E.

(*See* Rule 14.)

Particulars of motor spirit sold and consumed during the month ended 19 .

Name of Licensee Retail Licence No.

Quantity of motor spirit in stock at the beginning of the month.	Quantity of motor spirit added to stock during the month.	Name, address and licence number of the wholesale trader from whom the motor spirit in column 2 has been purchased.	Quantity of motor spirit (1) sold by the licensee by retail sale during the month and (2) issued for consumption by motor vehicles owned or hired by licensee.
1	2	3	4

Prices at which motor spirit mentioned in column 4 (1) in the case of sale, was sold by the licensee and (2) in the case of consumption by or on behalf of the licensee, was purchased by him.	Tax payable to Government on the quantity of motor spirit in column 4 on the prices mentioned in column 5 at the rate of two annas per gallon if the price is one rupee or more per gallon and at 12½ per cent. if the price is less than one rupee per gallon.	Challan No. and date or reference to evidence of payment to Government of the tax mentioned in column 6.	Quantity of motor spirit remaining in stock at the end of the month.
5	6	7	8

I do hereby declare that I have compared the above particulars with my records and books and that they are, in so far as I can ascertain, accurate and complete.

Dated this day of 19 .

Signature of the retail trader or his manager or agent.

FORM F.

(*See* Rule 15.)

Daily Register showing particulars of motor spirit sold or consumed and purchased on month year.

Name of Licensee Retail Licence No. Petrol Pump at

Quantity of motor spirit in stock at the opening of the day.	Quantity of motor spirit purchased during the day.	Total of column 1 and 2.	Quantity of motor spirit sold. *Vide* coupon Gallons rate sold.	Quantity of motor spirit remaining in stock at the close of day (Deduct column 4 from column 3).	Signature of the Retail Trader or Manager or Agent, with date.
1	2	3	4	5	6

FORM G.

(*See* Rule 16.)

Notice of demand for payment of tax under rule 16 of the Bombay Sales of Motor Spirit Taxation Rules, 1948.

Licence No.

Name of trader

For the month ended

Amount (Rs.).

Take notice that on behalf of the Government of Bombay I hereby demand payment by you of the sum of Rs. now due and unpaid on account of tax on sales of motor spirit for the month ended 19 , and that if the above amount be not paid into this office within fifteen days after the date of the service hereof on you, I shall proceed to obtain payment of the same according to the provisions of the Bombay Sales of Motor Spirit Taxation Act, 1946 (Bom. VI of 1946).

Licensing Authority.

THE BOMBAY ELECTRICITY (SPECIAL POWERS) ACT, 1946 (BOM. XX OF 1946).

G. N., P. W. D., No. 1932/36, dated 8th October 1946 (B. G., Pt. IV-B, p. 169). **S. 5 (2)**

In exercise of the powers conferred by sub-section (*2*) of section 5 of the Bombay Electricity (Emergency Powers) Act, 1946 (Bom. XX of 1946), the Government of Bombay is pleased to prescribe the following form of application for permission required under sub-section (*1*) of section 5 of the said Act :—

GOVERNMENT OF BOMBAY.

Application for a new supply or increase in supply.

1. Supply Undertaking.
2. Consumer's Name and Address.
3. Address at which supply is required.
4. Nature of service (viz. Residential, Industrial or Public Building).
5. Data on Consumer's load :—

—	As on 31st January 1943.	Additional sanctions subsequent to 31st January 1943.	Estimated requirement now applied for.	Total.
Notified connected load in kW.	(*a*)	(*c*)	(*e*)	(*g*)
Maximum demand in kW.	(*b*) Highest for 12 months ending 31st January 1943.	(*d*)	(*f*)	(*h*)

—	Brief details of purpose to be served.	No. of shifts, if any.	Probable date of load maturing.	Remarks. (Evidence as to essentiality of supply enclosing certificate of Essentiality from the appropriate authority.)
Notified connected load in kW.	(*k*)	(*l*)	(*m*)	(*n*)
Maximum demand in kW.				

6. Data to be furnished by Supply Undertaking.

Signature of consumer.
Date

Estimated increase in Maximum demand of undertaking if application is recommended. (a)	Capacity of existing service if any. (b)	Nature of supply A.C., D.C., H.T., or L.T. etc. (c)	Brief list of materials required, i.e., Cable, Transformer, Switchgear, etc. (d)

Approximate cost of giving service.		Remarks on effect of this service on the system of the undertaking with particular reference to plant, site or location of consumer's installations, etc. (g)
Materials in stock. (e)	Materials to be ordered. (f)	

7. Reference to last order of State or Central Authority, if any, regarding this consumer.

*8. Remarks by Bulk Supplier.

9. Orders of Government.

Signature of Electricity Supply Authority.

Date

Deputy Secretary to the Government of Bombay,
Public Works Department.

Date

* This item is applicable only to the Licensees deriving supply from the Tata System.

G. N., P. W. D., No. 1932/36, dated 8th February 1949 (B. G., Pt. IV-B, p. 306). S. 5 (2).

In exercise of the powers conferred by sub-section (*2*) of section 5 of the Bombay Electricity (Emergency Powers) Act, 1946 (Bom. XX of 1946), the Government of Bombay is pleased to prescribe the following form of application for permission required under sub-section (*1*) of section 5 of the said Act for the purposes of domestic purposes, including lights, fans and water pumps and for temporary supply :—

[Form laid down in Government Notification No. 1932/36-El (C), dated the 8th February 1949.]

GOVERNMENT OF BOMBAY.

Name of the Electric Supply Undertaking :—

Consolidated application for a new supply or increase in supply for domestic purposes including lights, fans and water pumps temporary supply.

Serial No.	Comsumer's Name and address.	Address where supply is required.	Existing load. Kw.	Load applied for. Kw.	Purpose.	Remarks.
1	2	3	4	5	6	7

Signature of the licensee.

Orders of Government.

No.

Dated the

Under Secretary to the Government of Bombay,
Public Works Department.

THE BOMBAY COTTON (STATISTICS) ACT, 1946 (BOM. XXVII OF 1946).

G. N., F. D., No. 6280/33-D, dated 3rd July 1947 (B. G., Pt. IV-B, p. 359).

Amended by G. N., F. D., No. 6280/33, dated 29th August 1947.

S. 13 Bombay Cotton (Statistics) Rules, 1947.

In exercise of the powers conferred by section 13 of the Bombay Cotton (Statistics) Act, 1946 (Bom. XXVII of 1946), the Government of Bombay is pleased to make the following rules, namely :—

1. *Short title.*—These rules may be called the Bombay Cotton (Statistics) Rules, 1947.

2. *Definitions.*—In these rules, unless there is anything repugnant in the subject or context—

(1) "Act" means the Bombay Cotton (Statistics) Act, 1946;

(2) "Form" means the form appended to these rules;

(3) Words and expressions not defined in these rules but defined in the Act shall have the meanings assigned to them in the Act.

3. *Form of return under section 3 of the Act.*—(1) The return to be submitted to the Director of Agriculture (Extension), Bombay State, Poona, in accordance with section 3 of the Act shall be in Form "A" hereto appended.

(2) A copy of the form duly filled in shall be sent to the Director of Agriculture (Extension).

4. *Exercise of the right of access, inspection and search under section 4 of the Act.*—The Officers authorised under section 4 of the Act shall exercise the right of access, inspection and search conferred by that section during any time between sunrise and sunset.

FORM A.

(*See* rule 3.)

To

The Director of Agriculture (Extension),
State of Bombay, Poona.

I/We.....trader/owner hereby declare that I/We possessed the following stocks of cotton detailed below on 31st August 19..... according to

the records maintained by me/us and that the same actually tally with the stocks on hand :—

(*a*) Full name and address of the trader or owner .....

.....

(*b*) House No. and complete address of the premises where the cotton is stocked

.....

(*c*) Stock per variety :—

Name of variety of cotton.	Unginned cotton (Kapas) (lbs.)		Ginned cotton not pressed (lbs.)		Full pressed bales (392 lbs.) of lint.		Premises where stored.
	Old	New	Old	New	Old	New	
1	2	3	4	5	6	7	8
(*i*) Dharwar-Upland ...							
(*ii*) Jarila ...							
(*iii*) Barsi-Nagar Oomras							
(*iv*) Broach Vijaya ...							
(*v*) Surti-Suyog ...							
(*vi*) Gujarat Dholleras ...							
(*vii*) Kumpta-Jayawant...							
(*viii*) Kumpta ordinary ...							
(*ix*) Others ...							
Total ...							
(*x*) Cotton Waste (fly) ...							

Note 1.—Under "Others" should be included the stocks of cotton, if any, from outside the State specifying the quantity held under each variety.

Note 2.—No statistics need be given if stock of cotton stored in any premises is less than 100 lbs. in weight.

I/We declare that the above information is true and correct.

Signature of trader or owner .....

THE BOMBAY HOME GUARDS ACT, 1947 (BOM. III OF 1947).

G. N., H. D., No. 893/5, dated 12th November 1946 (B. G., Pt. IV-B, p. 185).

S. 8 Bombay Home Guards Rules, 1946.

Amended by G. N., H. D., No. 893/5, dated 6th June 1947.
Amended by G. N., H. D., No. 2494/5, dated 21st October 1947.
Amended by G. N., H. D., No. 893/5, dated 31st December 1947.
Amended by G. N., H. D. No. 4415/2, dated 2nd June 1948.

In exercise of the powers conferred by section 8 of the Bombay Home Guards Ordinance,* 1946 (Bombay Ordinance No. 1 of 1946), and of all other powers enabling it in this behalf, the Government of Bombay is pleased to make the following rules, namely :—

1. *Short title.*—These rules may be called the Bombay Home Guards Rules, 1946.

2. *Recruitment and appointment.*—(1) No person shall be appointed as a member of the Home Guards unless he has attained the age of 20 and is below the age of 50 years. A member of the Home Guards may continue as such till he reaches the age of 55 years :

Provided that the age limits prescribed above may be relaxed by the Commandant in suitable cases.

(2) No person shall be appointed a member of the Home Guards unless he has passed at least the primary fourth standard examination :

Provided that in the Ahmedabad area a member of the Citizens' Volunteer Corps may be appointed a member of the Home Guards, even if he has not such qualifications ;

Provided further that the State Government may in respect of any area for which the Home Guards has been constituted, fix any other qualifications which it may deem fit.

(3) Every person desiring to be appointed as a member of the Home Guards shall make an application in Form A appended hereto.

(4) In making appointments the Commandant shall be assisted by a Committee called the Home Guards Recruitment Committee, consisting of, in the case of Greater Bombay 5 persons, and in the case of other areas 3 persons, nominated by the State Government.

(5) Before any person is appointed as a member of the Home Guards, the Commandant may require him to undergo a medical test to his satisfication.

(6) No person shall be appointed as a member of the Home Guards unless he has signed a pledge in Form B appended hereto before an officer authorised in that behalf by the Commandant.

---

*These rules made under the Bombay Home Guards Ordinance, 1946, continue in force and are deemed to be made in pursuance of the Bombay Home Guards Act, 1947 (Bom. III of 1947).

(7) Every person enrolled as a member of the Home Guards shall receive a certificate of appointment from the Commandant or a person authorised by him.

(8) Appointment of a member of the Home Guards shall be for a term of 5 years : Provided that the Commandant may for special reasons accept the resignation of a member of the Home Guards before the expiry of his term of appointment.

3. *Organisation.*—The Home Guards consist of a Commandant, an Assistant Commandant, an Adjutant, such staff officers as the Commandant may consider necessary, Divisional Commanders, Company Commanders, Platoon Leaders, Assistant Leaders, Section Leaders, Assistant Section Leaders and sections that consist of twelve men. Three Sections will form a Platoon, three Platoons a Company and three companies a Division. As far as possible, each Company will have a Motorized Unit in addition.

4. *Powers of Commandant.*—Subject to the orders of the Commissioner of Police, Bombay, or the District Superintendent of Police concerned, as the case may be, or a police officer authorised by the said officers, the Commandant may exercise all powers conferred under section 4 of the Ordinance on the Commissioner of Police, Bombay, or the District Superintendent of Police, concerned.

5. *Discipline.*—(1) The Commandant shall comply with all orders issued to him by the Commissioner of Police, Bombay, or the District Superintendent of Police, concerned, as the case may be, or any police officer authorised in this behalf by the said officers.

(2) A member of the Home Guards shall perform such duties and functions as may be assigned to him and shall obey every order of his superior officer.

(3) Nothing in the rules or orders made under sections 7 (*2*) and 13 (*1*) (*a*) (*i*) and (*ii*) of the City of Bombay Police Act, 1902, or sections 27 and 29 (*3*) of the Bombay District Police Act, 1890, shall apply to the members of the Home Guards.

(4) For the purposes of administration and discipline, the members of the Home Guards shall, subject to the provisions of sub-rule (5), be under the control of their own officers :

Provided that if a contingent of Home Guards is acting in conjunction the ordinary Police Force the Senior Officer of such contingent present shall be under the immediate control and subject to the directions of the senior officer of such police force present not below the rank of an Inspector, in the area of Greater Bombay and Ahmedabad and, not below the rank of a Sub-Inspector, elsewhere.

(5) The Commissioner of Police, Bombay, the District Superintendent of Police concerned, or the Commandant, may for good and sufficient reasons, direct the removal of a member from the Home Guards.

6. *Uniform, accoutrements, etc.*—(1) A member of the Home Guards shall, while on duty, wear the uniform supplied to him or, if he has not been supplied with a uniform, the armlet prescribed by the Commandant in this behalf. He may also carry a rifle or a revolver or any other weapon, sanctioned by Government.

(2) A member of the Home Guards shall, on ceasing to be a member forthwith deliver to the Commandant or to such person and at such place as he may direct—

(*a*) his certificate of appointment, and

(*b*) the uniform, armlet and any other article supplied to him while he was a member of the Home Guards.

7. *Training.*—The members of the Home Guards shall before they are called out to perform any of the functions laid down in rule 8 undergo a course of training at such time as may be fixed by the Police Officers duly authorised in that behalf by the Commissioner of Police, Bombay, in the Greater Bombay, and the District Superintendent of Police concerned, elsewhere. The course shall consist of physical training squad drill, practical training in effecting arrests, carrying raids, searches and other suitable matter and lectures on the duties of members of the Home Guards. Members of the Home Guards selected by the Commissioner of Police, Bombay, or the District Superintendent of Police concerned, as the case may be, may also be given training in the use of arms.

8. *Functions.*—(1) The functions of members of the Home Guards shall ordinarily consist of—

(*a*) guarding public buildings,

(*b*) patrolling for the prevention of crime, and the enforcement of such regulations and orders made under the City of Bombay Police Act, 1902, in Greater Bombay, or the Bombay District Police Act, 1890, elsewhere, or any other law for the time being in force as it would be the duty of a Police Officer to enforce under the said Acts or law, and

(*c*) assisting the ordinary police force in its other duties.

(2) A member of the Home Guards constituted for any area shall be bound to serve in any part of such area :

Provided that as far as possible each platoon shall be assigned duties near the locality in which the members composing such platoon reside.

(3) Except in an emergency no member of the Home Guards shall without his consent when called out, be required to be on duty for more than four times a week or in the aggregate more than eight hours a week.

9. *Remuneration.*—A duty allowance of Rs. 2-8-0 per day shall be paid to each member of the Home Guards who is called out to aid the Police, or when he is required to attend a training camp. No other remuneration of any kind shall be paid to the member except under the provisions of rule 11.

10. *Compensation.*—If a member of the Home Guards suffers any damage to his person or property while under training or on duty, he shall be paid such compensation as may be determined by the State Government, provided that such damage or injury is caused in circumstances over which the Home Guard has no control.

11. *Motorised unit.*—A motorised unit of the Home Guards may be formed for members owning motor vehicles who desire to place the services of themselves and their vehicle at the disposal of the Commandant when called out under section 4 of the Ordinance. Only member-owners who know how to drive and whose motor vehicles conform to the required specifications shall be enrolled in this unit. The State Government shall bear the cost of petrol for the use of the motor vehicles and extra ration shall be given in respect of such vehicles, so long as rationing of petrol lasts.

The State Government shall also bear the difference between the riot and ordinary insurance in respect of such vehicles in cases in which the member-owners have taken out riot insurance policies in respect of such vehicles.

FORM A.

Form of Application.

To

The Commandant, Home Guards, "Greater Bombay".

I declare that I am a citizen of India that I desire to be enrolled in the Home Guards for Greater Bombay* and that I am not under any obligation to serve in any other force.

I understand that—

(1) in any emergency I shall be liable to be called out on duty at any time and for any period;

(2) I shall not ordinarily be liable when called out, to be on duty for more than 4 times a week nor in the aggregate for more than 8 hours a week;

(3) I shall be required to take the following pledge, namely :—

"I.....residing at .....
....., do solemnly and sincerely declare and affirm that I will well and truly serve the Government of Bombay as a member of the 'Home Guards' in Greater Bombay* without favour or affection, malice or ill-will, or communal or political bias: and that I will with the best of my powers, cause peace to be kept and preserved, and prevent all offences against persons and property and that, while I continue to be a member of the Home Guards I will to the best of my skill and knowledge, discharge all the duties as such member faithfully, according to law and will not allow any communal or political bias to interfere with the duties assigned to me by Government or my superior officers."

(4) I shall, except for special reasons accepted by the Commandant, be required to serve for a period of 5 years in the Home Guards;

(5) I shall be liable to serve in any part of Greater Bombay.*

1. Name in full .....

2. Address ... (Residence) ..... (Business) .....

3. Telephone No. ... (Residence) ..... (Business) .....

4. Date of birth .....

5. Place of birth ... (Town) ..... (Country or District) .....

6. Occupation or profession .....

7. Education (Degrees held or examination passed)—

(Special qualifications such as knowledge of foreign languages or of stenography or typing should be mentioned.)

* Here insert the name of the area concerned.

8. Particulars of war service or military or naval training or training with any First Aid or ambulance Corps.

9. Father's name .....

10. Father's occupation or profession .....

.....

11. State between what hours you would prefer to do normal duty, for example:

(1) 8-0 p.m. and 8-0 a.m.;

(2) at any time on Sundays and Bank holidays;

(3) at any time of day, but not more than one day a week.

I declare that the above particulars are correct.

Date

(Signature).

Certificates of character signed by two gentlemen of position who have known you personally for at least 3 years should be written in space below.

1. .....

2. .....

Note.—After completing the form you should post it or deliver it to the Commandant, Home Guards, A.F. (I) Building,

Mahatma Gandhi Road, Dhobi Talao, Bombay
Head Police Office of the area concerned

You will receive intimation in due course whether your services can be utilised.

FORM B.

Form of Pledge.

"I..... residing at.....do solemnly and sincerely declare and affirm that I will well and truly serve the Government of Bombay as a Member of the 'Home Guards', in Greater Bombay* without favour or affection, malice or ill-will, or communal or political bias; and that I will, with the best of my powers cause peace to be kept and preserved, and prevent all offences against persons and property and that, while I continue to be a member of the Home Guards, I will, to the best of my skill and knowledge, discharge all the duties as such member faithfully, according to law and will not allow any communal or political bias to interfere with the duties assigned to me by Government or my superior officers."

* Here insert the name of the area concerned.

THE BOMBAY PUBLIC SECURITY MEASURES ACT, 1947 (BOM. VI OF 1947).

G. N., H. D., No. 1678/5 (ii), dated 2nd April 1947 (B. G., Pt. IV-B, p. 231). S. 6 (3)

In exercise of the power conferred upon it by sub-section (*3*) of section 6 of the Bombay Public Security Measures Act, 1947 (Bom. VI of 1947), the Government of Bombay is pleased to make the following rule, namely :—

An order imposing a collective fine issued by any officer empowered by the Government of Bombay under sub-section (*2*) of section 6 of the Bombay Public Security Measures Act, 1947 (Bom. VI of 1947), should be published either in the *Official Gazette* or in any such other manner as such officer considers best calculated to bring the order to the notice of the inhabitants of the area concerned.

THE BOMBAY INDUSTRIAL RELATIONS ACT, 1946 (BOM. XI OF 1947).

G. N., L. & H. D., No. 1237/46, dated 19th June 1950 (B. G., Pt. IV-B, p. 1443). S. 62 (1)

In exercise of the powers conferred by sub-section (*1*) of section 62 of the Bombay Industrial Relations Act, 1946 (Bom. XI of 1947), and in supersession of Government Order, Labour Department, No. 1237/46, dated the 3rd March 1948, the Government of Bombay is pleased to fix for each stage of the conciliation proceedings provided for under Chapter X of the said Act mentioned in column I of the Schedule hereto appended the time limit specified opposite thereto in column II of the said Schedule.

Schedule.

I Stage of conciliation proceedings.	II Time limit.
(1) Holding of the conciliation proceedings under section 56.	Within ten days from the date on which the dispute is entered in the register under section 55.
(2) Close of the proceedings before the Conciliator.	Within nine days from the date on which the proceedings are held under section 56, after excluding the period of extension mutually agreed to by the parties under sub-section (*2*) of section 62.
(3) Submission of a report under sub-section (*1*) or (*2*) of section 58, as the case may be.	Within two days from the last day on which conciliation proceedings are held.
(4) Forwarding of the report under sub-section (*3*) of section 58.	Within two days from the date of the submission of the report under sub-section (*1*) or (*2*) of section 58, as the case may be.
(5) Publication of the report under sub-section (*4*) of section 58.	Within seven days of the submission of the report under the proviso to sub-section (*2*) or under sub-section (*3*) of section 58.

G. N., L. & H. D., No. 717/48, dated 17th May 1950 (B. G., Pt. IV-B, p. 985). S. 113

In exercise of the powers conferred by section 113 of the Bombay Industrial Relations Act, 1946 (Bom. XI of 1947), the Government of Bombay is pleased to amend Schedules I and III to the said Act as follows, namely :—

In item 9 of Schedule I and item 7 of Schedule III, for the word "stoppages" the word "closures" shall be substituted.

S. 123 Bombay Industrial Relations Rules, 1947.

G. N., P. & S. D., No. 1237/46, dated 20th September 1947 (B. G., Pt. IV-B, p. 594).

Amended by G. N., Lab. D., No. 1237/46, dated 8th February 1949.

Amended by G. N., Lab. D., No. 1237/46, dated 8th March 1949.

Amended by G. N., Lab. D. No. 717/48, dated 31st May 1949.

Amended by G. N., L. & H. D., No. 717/48, dated 16th January 1950.

Amended by G. N., L. & H. D., No. 717/48, dated 14th June 1950.

In exercise of the powers conferred by section 123 of the Bombay Industrial Relations Act, 1946 (Bom. XI of 1947), the Government of Bombay is pleased to make the following rules, namely :—

1. *Short title.*—These rules may be called the Bombay Industrial Relations Rules, 1947.

2. *Definitions.*—(1) In these rules unless there is anything repugnant in the subject or context,—

(*i*) "Act" means the Bombay Industrial Relations Act, 1946 ;
(*ii*) "Form" means a form appended to these rules ;
(*iii*) "Schedule" means a Schedule appended to the Act ;
(*iv*) "Section" means a section of the Act.

(2) Words and expressions not defined in these rules shall have the meanings assigned to them under the Act.

3. The State Government shall maintain two separate panels of an equal number of persons representing the interests of employers and employees for the purposes of appointment on Boards of Conciliation constituted under section 7. Before making appointments to these panels the State Government shall invite such organizations of employers and workers and such other bodies and persons as it may deem fit to recommend the names of suitable persons for this purpose. The members of the panels shall be selected from the names so recommended.

4. The list of panels constituted under rule 3 shall be published in the *Official Gazette.*

5. The name of any member of a panel who has been adjudged a bankrupt, or has been declared insane or who has been convicted in a criminal proceeding, for an offence involving moral turpitude shall be removed from the panel.

6. Any vacancy on these panels which may have been caused by resignation, death or by virtue of rule 5 shall be filled in the manner provided for in rule 3. The appointment of a person in every vacancy so filled shall be notified in the *Official Gazette.*

7. Any vacancy which has been created on a Board shall be filled by the State Government in the case of a member either by an independent person or from the panel concerned according as the original member was an independent person or a person from the panel and in the case of the Chairman by an independent person. The name of the person so appointed shall be notified in the *Official Gazette.*

8. If a Chairman or any member of a Board is adjudged a bankrupt or is declared insane or is convicted in any criminal proceeding for an offence involving moral turpitude, he shall cease to be a member of such Board and the vacancy so created shall be filled in the manner laid down in rule 7.

9. A person shall not be eligible to be appointed to preside over a Labour Court unless he is or has been a Civil Judge or possesses the following qualifications :—

(*a*) He has practised as an advocate or pleader in the High Court of Bombay or in the Civil or Criminal Courts subordinate to it for at least 7 years and either—

(1) is a Bachelor of Laws of the University of Bombay, or

(2) has passed the examination for Pleaders held by the High Court, or

(3) has passed the Advocates' Examination conducted by the Bombay Bar Council, or

(4) has been admitted to the Bar of England, Northern Ireland or Scotland;

(*b*) He has sufficient knowledge of any one of the following regional languages of the State, viz. Gujarati, Marathi and Kannada to enable him to speak read and write and transalate with facility from the written character into English and *vice versa* ; and,

(*c*) He has had practical experience of labour and industrial problems or has done research in such problems or made a study of labour and industrial law.

10. The registers of unions referred to in section 12 shall be maintained in Forms A, B and C.

11. The list of approved unions referred to in section 12 shall be maintained in Form D.

12. Applications by unions for registration under section 13 shall be in Form E.

13. The fee payable for registration of a union under section 14 shall be rupee one.

14. The certificate of registration issued by the Registrar under section 14 shall be in Form F.

15. The fee payable by a union which makes an application to the Registrar under section 16 shall be Rs. 10.

16. Every application made by a union under section 16 shall be published by the Registrar in the *Official Gazette*.

17. Any union making an application for re-registration under section 17 shall apply in Form G.

18. The fee payable by a union for re-registration under section 17 shall be rupee one.

19. Any change in the address of the head office of a registered union shall be communicated in writing to the Registrar within seven days of such change, and the changed address shall be recorded in the appropriate register maintained under section 12.

20. (1) Any change in the name of a registered union shall be communicated in writing to the Registrar within seven days of the registration of such change under the Indian Trade Unions Act, 1926. The change in name shall be recorded by the Registrar in the appropriate register maintained under section 12 and notified in the *Official Gazette.*

(2) The Registrar shall certify under his signature at the foot of the certificate issued under rule 14 that the new name has been registered.

21. (1) Every employer in any industry in any local area to which the Act applies under sub-section (*3*) of section 2 shall within seven days of the dates on which the Act comes into force and every employer in any industry in any local area to which all or any of the provisions of the Act have been applied under sub-section (*4*) of section 2 shall also within seven days of the date on which such provisions of the Act have been applied to that industry and thereafter on or before the tenth day of every month forward by registered letter to the Registrar a statement in such form as the Registrar may require, showing correctly the number of employees employed by him on the first working day of the month. In all cases where work is done in two or more shifts, the employees in all the shifts shall be included in the number of employees for whom the return is to be made but the figure for each shift shall be shown separately.

(2) Every employer of an undertaking in any such industry shall also forward to the Registrar such statement in the manner provided in sub-rule (*1*) within seven days of the date on which such undertaking was started by him after the coming into force of the Act or as the case may be, after the application of all or any the provisions of the Act to such industry and thereafter on or before the tenth day of every month.

22. Every registered union shall, on or before the twentieth day of every month, forward by registered letter to the Registrar a statement in such form as the Registrar may require. Such statement shall, in the case of a union other than a Representative Union, show correctly the number of members the union had in each occupation on the first day of the month separately for each undertaking of each employer, within the local area for which the union is registered, with whom the members of the union were employed. In the case of a Representative Union such statement shall show correctly the total number of members the Union had in the industry concerned on the first day of the month within the local area for which the Union is registered. Where the Union is registered for more local areas than one there shall be a separate statement for each such local area.

23. The Registrar may call upon any employer or any union to produce such documents and supply such further information as he may deem necessary to prove that the information supplied under rules 21 and 22 is correct

24. (1) The Registrar shall forward in the month of January, April, July and October every year a consolidated statement for the three previous months for every industry separately to the Labour Officer of each local area containing—

(*i*) where there is no Representative Union for an industry in a local area—

(*a*) the number of members each Registered Union has in each occupation in each undertaking in the local area, and

(*b*) the number of employees employed in each occupation in each undertaking in the local area ; and

(*ii*) where there is a Representative Union for an industry in a local area—

(*a*) the number of members of the Representative Union in the industry in the local area and

(*b*) the total number of employees in the industry in the local area.

(2) Such statements shall be open to inspection by any employer or any union in the industry in the local area.

25. (1) Where no Representative Union exists for an industry in a local area any employer or any union in such industry may call upon the Registrar in writing for information in connection with the total number of employees in any occupation or undertaking in such industry and the number of members each registered union has in any occupation in such industry.

(2) Where a Representative Union exists for an industry in a local area any employer or union may call upon the Registrar in writing for information in connection with the total number of employees employed in the industry in the local area and the total number of members of the Representative Union in the industry in the local area.

26. Every order passed under section 14, 15 or 16 and every order passed in appeal under section 20 shall be published by the authority making the order in the *Official Gazette* and a copy of the same shall be forwarded to the Deputy Commissioner of Labour Information for publication in the *Labour Gazette*.

27. Any union desirous of being registered for an industry for more than one local area shall apply in Form E and the provisions of rules 13 and 14 shall apply to such registration.

28. An application by a union for being entered in the approved list shall be in Form H.

29. The President, the Vice-President, the General Secretary, the Secretary, the Joint Secretary, the Assistant Secretary, the Treasurer of an approved union and such members of the union as have completed at least six months of membership and been authorised by the President in this behalf shall, subject to the following conditions, be entitled to collect sums payable by its members on the premises of an undertaking where wages are paid to them :

(*a*) the name or names of the officer or officers or member or members authorised in this behalf shall be intimated in advance to the employer and changes, if any, therein shall be communicated to the employer at least 24 hours before the date of collection ;

(*b*) the officers or members visiting the undertaking for this purpose shall carry a letter of authority in Form I-A.

(*c*) no coercion or force shall be used on any employee ;

(*d*) the collection shall be made without causing hindrance to the staff of he undertaking or interference in the management's work ;

(*e*) not more than 25 employees at a time shall be allowed to gather at the place where such sums are collected ;

(*f*) collections shall be made on the usual pay day or days and the subsequent three days and the day or days on which unclaimed wages are paid :

Provided that (*i*) on the usual pay day or days the collection shall be made during the hours of payment, and (*ii*) on any other days the collection shall be made during such hours as may be mutually agreed upon between the employer and the union subject to the condition that the period shall not be more than three hours on each of such days.

30. The President, the Vice-President, the General Secretary, the Secretary, the Joint Secretary, the Assistant Secretary and the Treasurer of an approved union, shall be entitled to put up or cause to be put up a notice board outside the time-keeper's office or at any other conspicuous place mutually agreed upon between the employer and the union and affix notices thereon during the hours the undertaking is open :

Provided that—

(*a*) the notice board to be put up shall be of a reasonable size ;

(*b*) the notices to be affixed shall be signed either by the President, the Vice-President, the General Secretary, the Secretary, the Joint Secretary, the Assistant Secretary or the Treasurer ; such notices shall relate to lawful activities of the union and shall not be of an offensive or provocative nature.

31. Subject to the provisions of rules 32, 33 and 34, the President, the Vice-President, the General Secretary, the Secretary, the Joint Secretary, the Assistant Secretary and the Treasurer of an approved union shall, for the purpose of the prevention or settlement of an industrial dispute, have a right and shall be permitted by the employer to do all or any of the acts mentioned in sub-clauses (*i*), (*ii*) and (*iii*) of clause (*c*) of section 25.

32. The officers specified in rule 31 shall have a right and shall be permitted by the employer to hold discussions on the premises of the undertaking with the employees concerned who are members of the approved union :

Provided that—

(*a*) the union shall intimate in advance to the employer the name or names of the officer or officers authorised for the purpose and the name of the department or departments in which the members concerned are employed ; and

(*b*) the discussions shall be held in such manner as not to interfere with the working of the undertaking.

33. The officers of an approved union specified in rule 31 shall have a right to meet and discuss with an employer or any person appointed by him for the purpose the grievances of its members employed in his undertaking subject to the following conditions, namely :—

(*a*) the discussion shall ordinarily be held on two days in a week during such hours as may be fixed by agreement between the employer and the union except in urgent cases when it may be held on any day at any time by previous appointment ;

(*b*) the union shall ordinarily communicate in advance the nature of the grievances which it desires to discuss ;

(*c*) the name of the officer authorised in this behalf shall either be communicated to the employer in advance or such officer shall carry a letter of authority in Form I-B.

34. Any of the officers specified in rule 31 shall have a right and shall be permitted by the employer to inspect in any undertaking any place where any member of the union is employed provided he carries with him a letter of authority in Form I-C and informs the employer beforehand which place in the undertaking he desires to inspect.

35. (1) The following shall be the fees for the purposes of sub-section (*6*) of section 26 :—

Table of Maximum Fees for Legal Aid.

	Industrial Court.	Labour Court.
	Rs.	Rs.
(1) For each conference with legal adviser	40	20
(2) For drawing up an application, written statement, memorandum of appeal, or petition of more than 15 foolscap typed pages.	50	25
(3) For drawing up an application, written statement, memorandum of appeal, or petition of less than 15 foolscap typed pages.	30	15
(4) For appearance in Court (per day)	80	40
(5) For opinion of legal adviser in writing	60	30
(6) For appearance in Chamber matter or for appearance before the officer of the Court.	20	10
(7) Fees for retainer	30	30

(2) Fees in excess of those prescribed in sub-rule (1) may be given to senior counsels or legal practitioners of high standing in matters of importance or difficulty before the Industrial Court.

36. Any association of employers desiring recognition as an association of employers under the Act shall apply to the Registrar in Form J. On receipt of such application, which shall be in duplicate, the Registrar shall forward a copy of the application to the State Government with such remarks as he may deem necessary.

37. (*i*) Every association of employers which has been recognised by the State Government under section 27 shall notify to the Registrar of every change, which occurs in its name, Memorandum of Association or Constitution or membership within seven days of such change.

(*ii*) Any such change in the name of an association of employers shall be notified in the *Official Gazette*.

38. Any employer in an industry, not being a member of an association of employers connected with that industry, who has agreed to be represented in any proceeding under the Act by such association, shall send intimation in writing to that effect to the Registrar and shall send copies of such intimation to the Labour Officer for the local area, to the authority holding the proceeding and to the representative union for the industry, if any.

39. (1) Where more employers than one are affected or under any of the provisions of the Act deemed to be affected and no association of employers is under sub-section (*2*) of section 27 entitled to represent all of them, the representative determined in the following manner shall be entitled to act as their representative:—

(*a*) Where there is an association of employers and two-thirds or more of the employers who are not members of the association agree to be represented by the association, that association;

(*b*) Where there is an association of employers but less than two-thirds of the employers who are not members of the association are in favour of their being represented by the association, not more than five representatives elected from among all the employers at a meeting held by the Labour Officer for the purpose, provided that at least one of the representatives shall be from among the employers who have not agreed to be represented by the association;

(*c*) In all other cases, not more than five representatives elected by the employers at a meeting held by the Labour Officer for the purpose:

Provided that where the number of employers affected or deemed to be affected does not exceed five no election shall be held and all the employers concerned shall be entitled to act as the representative.

(*d*) Any vacancy in the representatives elected under clause (*b*) or (*c*) shall be filled by election at a meeting of the employers held by the Labour Officer for the purpose.

(2) The names of persons elected as representatives shall be communicated by the Labour Officer to the Registrar and the authority holding the proceeding.

40. (1) Where there is no Representative Union in respect of any industry in any local area the Labour Officer for the local area or any person deputed by him for the purpose shall hold meetings of the employees in each undertaking in the industry and each occupation therein at such place and time as he deems fit. At such meetings the employees may elect five representatives from among themselves.

(2) Where an election has been held under sub-section (*1*) of section 28, within two years from the date on which such election is held and within each succeeding two years thereafter the Labour Officer or any person deputed by him for the purpose shall hold meetings of the employees for the purpose of electing fresh representatives from among themselves.

(3) After the election of the representative of employees the Labour Officer shall intimate the names of the persons elected to the employer concerned. Copies of such intimation shall be sent to the Registrar, the Chief Conciliator and the Conciliator for the industry in the local area.

41. Subject to the provisions of sub-section (*4*) of section 28, the persons elected under rule 40 shall function as the representative of employees until such time as fresh elections are held by the Labour Officer and the names of the persons so elected are communicated by him to the employer concerned.

42. Copies of the intimation referred to in sub-rule (3) of rule 40 shall be affixed by the employer prominently outside the time-keepers' office and at the entrance through which the majority of the employees enter the undertaking.

43. (1) The employees in an occupation or undertaking desiring to recall a representative of employees shall send a requisition in writing to the Labour Officer for the local area. Such requisition shall be signed by at least twenty per cent. of the employees in the occupation or undertaking as the case may be and shall state the reasons for the recall.

(2) On receipt of such a requisition the Labour Officer shall as soon as may be hold a meeting of the employees in the occupation or undertaking as the case may be, and explain to them the object of the meeting. If the majority of the employees present at the meeting decides to recall the representative or representatives mentioned in the requisition the person or persons so recalled shall be deemed to have ceased to represent the employees concerned.

(3) The Labour Officer shall intimate to the employer concerned, the Chief Conciliator for the industry in the local area and the Registrar the name or names of the persons who have been so recalled.

44. Any vacancy in the representatives elected under sub-section (*1*) or (*3*) of section 28 shall be filled by election in the manner prescribed in rule 40 :

Provided that when the vacancy is caused by a recall under sub-section (*4*) of section 28 the Labour Officer may call upon the same meeting as the one called for the purpose of recalling to elect fresh representative or representatives as the case may be in place of the person or persons recalled.

45. Employees desiring to authorise under clause (*iii*) of section 30 any Qualified or Primary Union in the industry in which they are employed shall do so through their elected representatives who shall inform in writing to that effect the employer concerned, the Registrar, the Conciliator for the industry in the local area and the Labour Officer for the local area :

Provided that where there are no elected representatives of the employees concerned such authority and intimation shall be given through the employees, not exceeding five, selected by them for the purpose.

46. Where the Labour Officer is the representative of employees, the Labour Officer, shall, before entering into any agreement under section 44 or settlement under section 58, place the terms of such agreement or settlement before a meeting of the employees concerned. Such meeting shall be convened by the Labour Officer or any person deputed by him for the purpose at such place and time as the Labour Officer may decide and in such manner as he deems fit. If the majority of the employees present at the meeting accept the terms of agreement or settlement all the employees affected shall be deemed to have accepted the terms of such agreement or settlement.

47. (1) Where in any proceeding the persons entitled to appear or act under clause (*v*) of section 30 are more than five the Labour Officer or any person deputed by him for the purpose shall hold a meeting of such persons at such place and time as he deems fit. The person elected at the meeting shall be entitled to appear or act as the representative of employees in that proceeding and their names shall

be communicated by the Labour Officer to the employers and association of employers concerned, the Chief Conciliator, the Registrar and the authority holding the proceeding.

(2) The number of persons to be elected under sub-rule (1) shall be determined in the following manner :—

Number of persons entitled to act under clause (*v*) of section 30.	Number of persons to be elected to act instead.
Less than 15	5
15 to 50	9
51 to 100	13
101 to 200	17
201 to 400	21
401 and above	25

48. Within six weeks of the date of the application of the Act or any provisions thereof to any industry in any local area, and in the case of an undertaking started after the application of the Act or any provisions thereof to such industry within six months of the starting of the undertaking, every employer in the industry concerned shall forward by registered letter to the Commissioner of Labour, Bombay, three copies of the draft standing orders which he proposes to adopt for regulating the relations between him and his employees :

Provided that where an employer, who is a member of an association of employers, notifies the Commissioner of Labour in writing that he has agreed to the association submitting such standing orders on his behalf and the association submits the standing orders within the period specified in sub-section (1) of section 35 he shall be deemed to have complied with the provisions of that sub-section.

49. (1) The Commissioner of Labour shall forward a copy of the draft standing orders to the representative of employees of the undertaking concerned and to such other interests concerned in the industry as he may deem fit to consult and ask them to send their views thereon within 30 days of the date on which the copy of such orders was forwarded to them.

(2) On receipt of the views of the representative of employees and the interests concerned or on the expiry of the period of 30 days of the date of despatch of the draft standing orders whichever is earlier, the Commissioner of Labour shall call a conference of the representatives of employees and employers and such other interests in the industry as may have been addressed by him under sub-rule (1) for consultation and then settle the standing orders finally.

50. (1) The Commissioner of Labour after he has settled the standing orders, shall forward a copy of such standing orders to the Registrar, and shall also send copies of the same to the Labour Officer for the local area, the employer or the association of employers as the case may be, the representative of employees concerned, the Industrial Court and the Labour Court concerned.

(2) The Registrar shall, as soon as the standing orders have been recorded, intimate to the employer or the association of employers as the case may be and to the representative of employees concerned the date on which the standing orders were recorded.

(3) After the expiry of a period of 30 days from the date of their coming into operation the employer concerned shall, unless an appeal has been filed under sub-section (1) of section 36, print the standing orders settled and forwarded to him by the Commissioner of Labour in English and also in the principal regional language of the local area in which the undertaking of such employer is situated :

Provided that in undertakings where more than twenty per cent. of the total number of employees employed are Mussalmans such standing orders shall also be printed in Urdu.

(4) Where an appeal has been filed under sub-section (1) of section 36 the standing orders as settled by the Industrial Court shall be printed by the employer in the same manner as prescribed by sub-rule (3).

(5) Every set of standing orders printed as required by sub-rule (3) or (4) shall be posted by the employer concerned prominently on a special board to be maintained for the purpose outside the time-keeper's office or at the entrance through which the majority of the employees enter the undertaking and also in all the departments where the employees concerned are working.

51. Any employer intending to effect any change in respect of an industrial matter mentioned in Schedule II shall give notice of such intention to the representative of employees in Form K.

52. Any employee who desires a change in respect of an industrial matter not specified in Schedule I or III shall give notice to the employer through the representative of employees in Form L.

53. (1) Any employee or a Representative Union desiring a change in respect of (*i*) any order passed by the employer concerned under Standing Orders or (*ii*) any industrial matter arising out of the application or interpretation of Standing Orders or (*iii*) an industrial matter specified in Schedule III shall make an application in writing to the employer where such application is made by an employee it may be made to the employer direct or through the Labour Officer for the local area or the representative of employees concerned. A copy of the application shall be forwarded to the Commissioner of Labour and in cases where such application is not made through the Labour Officer for the local area to that officer.

(2) Where an application has been made by an employee under sub-rule (1) the employer and the employee may arrive at an agreement within fifteen days of the receipt of the application by the employer or within such further period as may be mutually fixed by the employer and the employee or the Labour Officer for the local area or the representative of employees as the case may be.

(3) Where an application has been made by a Representative Union under sub-rule (1), the employer and the Representative Union may arrive at an agreement within fifteen days of the receipt of the application by the employer or within such further period as may be mutually agreed upon by the parties.

54. The agreement referred to in sub-section (1) of section 44 shall be sent to the Registrar by registered letter and to the other officers specified therein by ordinary post.

55. (1) The Joint Committee shall consist of ten members of whom five shall be nominated by the registered union from among the employees in the undertaking or occupation concerned and five appointed by the employer concerned.

(2) Within 30 days of the decision to constitute a Joint Committee for an undertaking or occupation and every 12 months thereafter the employer and the registered union shall appoint or nominate persons to represent them on the committee.

(3) Before making such nominations the registered union shall call a meeting and consult the employees of the undertaking or occupation concerned as the case may be.

55-A. A copy of an order made by the State Government under sub-section (*1*) of section 49 shall be sent to the union and the employer concerned by registered post.

56. In the event of a member of the Joint Committee ceasing to be employed in the undertaking or occupation or retiring or ceasing in any other way to be a member of such a Committee, the vacancy shall be filled by nomination in the manner prescribed in rule 55 by the registered union or appointment by the employer according as the person who has ceased to be a member was nominated by the union or appointed by the employer.

57. (1) The Chairman of a Joint Committee shall be appointed by the members of the Committee from among themselves at its first meeting which will be convened by the employer.

(2) If the members cannot agree upon the person to be appointed as Chairman the employer and the registered union which nominated the members of the Joint Committee shall be entitled to appoint by agreement the Chairman from among the members.

(3) Failing agreement between the employer and the union the Chairman shall be appointed by the employer and the union respectively in rotation for a period of six months.

58. The Chairman who shall convene and preside over the meetings of the Joint Committee shall circulate the agenda of the meeting to the members along with the notice of the meeting except in the case of a special meeting at least 48 hours before the meeting. He shall cause the minutes of every meeting recorded and get them confirmed at the next meeting. He shall also communicate, as required by sub-section (*2*) of section 51, the decisions of the Joint Committee to the registered union and the employer as well as the Labour Officer and the Commissioner of Labour.

59. (1) The Joint Committee may meet as often as convenient but not less than once a month. In cases of urgency, a special meeting of the Committee may be called by giving not less than six hours' notice at the request of either side. The meetings shall be held during working hours unless otherwise agreed upon between the two sides.

(2) No business other than that appearing on the agenda, shall be transacted at any meeting unless both sides agree to its introduction.

(3) The presence of three-fifths of the members from each side of the Committee shall be necessary to form a quorum.

(4) The decision of the Committee shall be arrived at by agreement between the two sides, but if no such agreement is possible the decision shall be taken by vote of the majority of the members present. The Chairman shall have one vote and in case of a tie a casting vote.

60. The agreement referred to in sub-section (*1*) of section 52 shall be sent to the Registrar by registered letter and to the Labour Officer by ordinary post.

61. The special intimation referred to in sub-section (*2*) of section 52 shall be sent in Form M.

62. The statement of the case referred to in section 54 shall be in Form N.

63. On receipt of the statement of the case under section 54 the Conciliator for the industry in the local area shall send an intimation to the parties to the dispute to appear before him at such time and place as may be specified in the intimation. He shall hold discussions, either jointly or separately, with the employer and the representative of employees at such places and at such times as he may deem fit, and shall endeavour to bring about a settlement of the dispute.

64. The memorandum of settlement referred to in sub-sections (*1*) and (*4A*) of section 58 shall be drawn up in Form O.

65. The memorandum of settlement drawn up under rule 64 shall be published by the Registrar in the *Official Gazette* and a copy of the same shall also be forwarded to the Deputy Commissioner of Labour Information.

66. The notice referred to in sub-section (*2*) of section 59 shall be served on the parties concerned by registered letter.

67. (1) When an industrial dispute has been referred to a Board under sub-section (*1*) of section 59, the Board shall at its first sitting call upon the parties in such order as it thinks fit to state their case.

(2) Any member of a Board may administer an oath.

68. A submission entered into by the parties under section 66 shall be published by the Registrar in the *Official Gazette* and a copy of the same shall be forwarded to the Deputy Commissioner of Labour Information, and also to the arbitrator, Labour Court and the Industrial Court as the case may be.

69. Where an industrial dispute between employees and employees has been referred by the State Government under sub-section (*1*) of section 72 to the arbitration of the Industrial Court or the Labour Court, the Industrial Court or the Labour Court as the case may be shall send a notice to the employers of such employees that they have been made parties to such arbitration.

70. On receipt of a copy of an award forwarded under sub-section (*1*) of section 74 the Registrar shall publish it in the *Official Gazette* and shall forward a copy of the same to the Deputy Commissioner of Labour Information.

71. Every application under sub-section (*1*) of section 79 shall be made in Form P and shall be forwarded to the Labour Court for the local area concerned by registered post or be presented to the Clerk of the Court or any other subordinate officer authorised by the Court in this behalf.

72. (1) The record of industrial matters referred to in clause (*a*) of section 111 shall be maintained by the Director of Labour Information, Bombay.

(2) For each industry, the record of such industrial matters shall be maintained separately by the Director.

72-A. (1) The State Government may, by special or general order notified in the *Official Gazette*, require any employer, or employers generally, in any industry to—

(*i*) maintain records of employment and data relating to plant, premises and manufacture and particulars relating to other industrial transactions and dealings likely to affect the matters specified in clause (*a*) of section 111 in such form or forms in the Appendix to these rules as it may consider appropriate for such industry, and

(*ii*) submit copies thereof to the Deputy Commissioner of Labour Information, Bombay, or such other officer as may be authorised in this behalf by the State Government at such times as may be specified in the order; and

(2) The Deputy Commissioner or the officer authorised under sub-rule (1) may then obtain similar data and particulars from any other person who, in his opinion, is competent to furnish such data and particulars.

72-B. (1) Before holding an inquiry under section 112, the officer authorised under the said section shall indicate to the employer concerned the particulars in respect of which the accuracy of the records maintained by him is to be verified; and the officer shall allow him or his representative to be present during the inquiry if the employer so desires.

(2) The officer holding the inquiry shall, on demand, give the person concerned a written receipt for any record or document produced by him if the officer considers it necessary to retain such record or document in his possession.

(3) Any record or document retained under sub-rule (2) shall be returned to the person concerned as soon as practicable and in any case on completion of inquiry.

73. Before proceeding to hold an inquiry under sub-section (*1*) of section 112 the officer authorised by the State Government shall give at least three clear days' intimation to the employer concerned. He shall also specify in the intimation the particular records which he desires to verify.

74. The notices under section 116 shall be given in Form Q and shall be sent by registered post.

75. (1) If in any proceeding before the Registrar, a Conciliator or a Board the authority holding the proceeding requires any information in connection with such proceeding in a particular form he may call upon the party concerned to submit such information in that form.

(2) A Conciliator or a member of a Board shall have power, after giving reasonable notice, to enter the place or places where the employees concerned are employed or the office of any union or the premises provided by an employer for the residence of his employees for the purpose of holding a proceeding under the Act.

76. Whenever any letter, notice, statement or intimation is required to be forwarded or sent under any of these rules by registered post to any person it shall be deemed to be sufficient compliance with these rules if such letter, notice, statement or intimation is delivered by hand and an acknowledgement in writing, by or on behalf of such person, is obtained in respect of such delivery.

FORM A.

[Section 12 (*a*) and Rule 10.]

Register of Representative Unions.

Name.	Address of head office.	Date of registration.	Registered for		Date of being entered in the approved list.	Remarks.
			Industry.	Local area.		

FORM B.

[Section 12 (*a*) and Rule 10.]

Register of Qualified Unions.

Name.	Address of head office.	Date of registration.	Registered for		Date of being entered in the approved list.	Remarks.
			Industry.	Local area.		

FORM C.

[Section 12 (*a*) and Rule 10.]

Register of Primary Unions.

Name.	Address of head office.	Date of registration.	Registered for		Date of being entered in the approved list.	Remarks.
			Industry.	Local area.		

FORM D.

[Section 12 (*b*) and Rule 11.)

List of Approved Unions.

Name of the union.	Address of head office.	Date of entering in the approved list.	Date of removal from the approved list.	Remarks.

FORM E.

(Sections 13 and 22 and Rules 12 and 27.)

Application for Registration of Union.

Name of Union Address

Dated the day of 19 .

To

The Registrar,
Bombay Industrial Relations Act,
Bombay.

Dear Sir,

I beg to inform you that at a general meeting of the members / meeting of the executive of the above union which was held at on the day of 19 it was decided that the union should apply to you for registration as a Representative / Qualified / Primary Union for the industry in the local area of . A copy of the resolution signed by the President / Chairman of the union is attached and I have to request that the union may be registered accordingly.

*2. The union is registered as a Representative / Qualified / Primary Union for the industry in the local area / areas of under certificate No. dated

3. The union was registered under the Indian Trade Unions Act, 1926, on the day of 19 under certificate No. issued by the Registrar of Trade Unions for the State of Bombay.

4. The union has members in the ‡ / in the industry † industry in the local area of , and represents per cent. of the total number of employees employed in the industry † ‡ in that local area.

5. A copy of the constitution of the union is attached.

6. The address of the Head Office of the union to which all communications and notices may be addressed is

Yours faithfully,

General Secretary/Secretary.

*To be struck off in the case of unions which have not been previously registered for any local area.
†Here insert the name of the industry.
‡Here insert the name of the undertaking.

FORM F.

(Section 14 and Rule 14.)

BOMBAY INDUSTRIAL RELATIONS ACT, 1946.

Certificate of Registration.

Name of Union—

Registration Number—

OFFICE OF THE REGISTRAR,
Bombay Industrial Relations Act,
Bombay,

It is hereby certified that the
Union has been registered under the Bombay Industrial Relations Act, 1946, this
day of 19 as a
union for the industry in
the local area of

Registrar,
Bombay Industrial Relations Act.

FORM G.

(Section 17 and Rule 17.)

Application for re-registration of a Union.

Name of Union— Address—

Dated the day of 19 .

To
THE REGISTRAR,
Bombay Industrial Relations Act,
Bombay.

Dear Sir,

I beg to inform you that at a general meeting of the members / meeting of the executive of the above Union which was held at on the day of 19 it was decided that the union whose registration as a Representative/Qualified/Primary Union was cancelled on the day of 19

should apply to you for re-registration as a Representative/Qualified/Primary Union for *industry in the local area of under section 17 of the Bombay Industrial Relations Act, 1946. A copy of the resolution signed by the President/Chairman of the union is attached and I have to request that the union may be re-registered accordingly.

2. The union was registered under the Indian Trade Unions Act, 1926, on the day of 19 under Certificate No. issued by the Registrar of Trade Unions for the State of Bombay.

3. The union has members in the *industry/†in the industry in the local area of , and represents per cent. of the total number of employees employed in the *industry/† in that local area.

4. A copy of the constitution of the union is attached.

5. The address of the head office of the union to which all communications and notices may be addressed is

Yours faithfully,

General Secretary/Secretary.

* Here insert the name of the industry. † Here insert the name of the undertaking.

FORM H.

[Section 23 (*1*) and Rule 28.]

Application for being entered in the approved list.

Name of Union— Address—

Dated the day of 19 .

To

THE REGISTRAR,
Bombay Industrial Relations Act,
Bombay.

Dear Sir,

I beg to state that at a general meeting of the members/meeting of the executive of the above union which was held at on the day of 19 it was decided that the union should apply to you for being entered in the approved list of unions under section 23 of the Bombay Industrial Relations Act, 1946. A copy of the resolution signed by the President/Chairman of this

union is attached and the union may be entered in the approved list for the *industry in the local area of

2. The union was registered under the Indian Trade Unions Act, 1926, on the day of 19 under Certificate No. issued by the Registrar of Trade Unions for the State of Bombay.

3. The union has members in the *industry in the local area of

4. The constitution of the union provides for the matters mentioned in clauses (*i*) to (*vi*) of sub-section (*1*) of section 23 of the Bombay Industrial Relations Act, 1946. A copy of the constitution of the union is attached.

†5. The union is registered as a Representative/Qualified/Primary union under the Bombay Industrial Relations Act, 1946.

6. The address of the head office of the union to which all communications and notices may be addressed is

Yours faithfully,

General Secretary/Secretary.

*Here insert the name of the industry. †To be struck off in the case of a union not so registered.

FORM I-A.

[Rule 29 (*b*).]

Letter of Authority.

Date

Mr. who is of the Union, which is an approved union under the Bombay Industrial Relations Act, 1946, is authorised by the Union to collect sums payable by members to the Union on the premises of the following undertaking/undertakings:—

1.

2.

3.

4.

General Secretary/Secretary.

FORM I-B.

[Rule 33 (c).]

Letter of Authority.

Date

Mr. who is
of the Union, which is an approved union under the Bombay Industrial Relations Act, 1946, is authorised by the Union to meet and discuss with the employer/employers of the following undertaking/undertakings or any person appointed for the purpose the grievances of its members :—

1.

2.

3.

4.

General Secretary/Secretary.

FORM I-C.

[Rule 34.]

Letter of Authority.

Date

Mr. who is
of the Union, which is an approved union under the Bombay Industrial Relations Act 1946, is authorised by the Union to visit the*
to inspect the† where
a member/members of the Union is/are employed.

General Secretary/Secretary.

*Here insert the name of the undertaking.
†Here indicate the place to be inspected.

FORM J.

(Section 27 and Rule 36.)

Application for recognition of Association of Employers.

Name of Association Address

Dated the day of 19 .

To

THE REGISTRAR,

Bombay Industrial Relations Act,

Bombay.

Dear Sir,

I beg to inform you that at a meeting of the * Managing Committee of this Association which was held at on the day of 19 it was decided that the Association should apply to Government for recognition as an association of employers for the †industry for the local $\frac{\text{area}}{\text{areas}}$ of for the purposes of the Bombay Industrial Relations Act, 1946.

2. The Association has for one of its objects the regulation of the conditions of employment in the industry conducted or carried on by its members. The names of the members in the industry in the local $\frac{\text{area}}{\text{areas}}$ for which the application is made together with their addresses are given in the Annex. attached to this application.

3. I enclose a copy of the Constitution/Memorandum of Association of the Association.

Yours faithfully,

Secretary.

*or the body by whatever name called, to which the management of the affairs of the Association is entrusted.

†Here insert the name of the industry.

ANNEX.

List of members of the Association.

Name of employer.	Address.	Name of the undertaking.	Address of the undertaking.
1	2	3	4

FORM K.

[Section 42 (*1*) and Rule 51.]

Notice of change to be given by an employer.

Name of employer Address

Dated the day of 19 .

To

(The representative of employees)

Dear Sir/Madam,

In accordance with the provisions of sub-section (*1*) of section 42 of the Bombay Industrial Relations Act, 1946, $\frac{\text{I}}{\text{we}}$ beg to inform you that it is $\frac{\text{my}}{\text{our}}$ intention to effect the $\frac{\text{change}}{\text{changes}}$ specified in the Annex. to this letter.

Yours faithfully,

* Here insert the position which the person who signs this letter holds with the employer issuing this letter.

ANNEX.

Statement of the case.

FORM L.

[Section 42 (*2*) and Rule 52.]

Notice of change to be given by employee to employer.

Name of the representative of employees

Address

Dated the day of 19 .

To

(The name of the employer)

Dear Sir/Sirs,

In accordance with the provisions contained in sub-section (*2*) of section 42 of the Bombay Industrial Relations Act, 1946, $\frac{\text{I}}{\text{we}}$ hereby beg to give you notice that $\frac{\text{I}}{\text{we}}$ desire a change/changes specified in the Annex to this letter.

Yours faithfully,

Representative of employees.

ANNE

Statement of the case.

FORM M.

[Section 52 (*2*) and Rule 61.]

Special intimation to the Conciliator.

Name of the $\frac{\text{employer}}{\text{registered union}}$

Address Date

The Conciliator for the industry for the local area of

Dear Sir,

$\frac{\text{I}}{\text{We}}$ beg to inform you that the change mentioned in Annex. I, being a change in respect of a matter not specified in Schedule I or III of the Act, was proposed in the Joint Committee but no agreement has been arrived at in respect thereof. $\frac{\text{I}}{\text{We}}$ desire that the change as $\frac{\text{proposed in Annex. I}}{\text{now modified and shown in Annex. II}}$ should be made.

2. A full statement of the case is given in Annex. III.

3. The number of employees likely to be affected by the dispute is

Yours faithfully,

Annex. I.	*Annex. II.*	*Annex. III.*
Change proposed in the Joint Committee.	Change as modified.	Full statement of the case.

FORM N.

[Section 54 (*1*) and rule 62.]

Report of industrial dispute.

Name of the employer
Name of the representative of employees

Address

Dated the day of 19 .

To

The Conciliator for the local area for the industry concerned.
The Chief Conciliator, Bombay Industrial Relations Act, Bombay.
The Registrar, Bombay Industrial Relations Act, Bombay.

Dear Sir,

In continuation of the copy of the notice which $\frac{\text{I}}{\text{we}}$ forwarded to you on the

day of 19 $\frac{I}{we}$ beg to inform you that it has not been possible to reach an agreement with the $\frac{\text{representative of employees}}{\text{(the name of the employer concerned)}}$ and that $\frac{I}{we}$ still desire that the change/changes proposed by that notice should be effected.

2. A full statement of the case is given in the Annexure.

3. The number of employees likely to be affected by the dispute is

Yours faithfully,

*

Representative of employees.

*Here insert the position which the person who signs this letter holds with the employer or association of employers.

Annex.

Full statement of the case.

FORM O.

[Sections 58 (*1*) and (*4-A*) and Rule 64.]

Memorandum of Settlement.

(1) Representing Employers :

(2) Representing Employees :

Short recital of the case.

Terms of Settlement.

Signatures of the parties.

Signature of the Conciliator.

FORM P.

[Section 79 (*2*) and Rule 71.]

Application under section 79 (1).

[Except in the case of special application under sub-section (*3*) of section 52.]

In the Labour Court at.....

Application No. of 19 .

Name of the employer / registered union / employee / Labour Officer ... Applicant;

Postal address:

versus

Name of the employer / registered union / employee / Labour Officer ... Opponent.

Postal address:

In the matter of _____

_____

_____

The applicant respectfully submits:

(1) That

(2) That

(3) That

The applicant, therefore, prays that the Court may be pleased to decide—

(1)

(2)

(3)

The applicant begs leave to amend or add to or make alterations in the application if and when necessary.

Dated

Signature or thumb impression of applicant.

The applicant does solemnly declare that what is stated above is true to the best of his knowledge, belief and information.

This verification is signed at on

Signature or thumb impression of applicant.

FORM Q.

[Section 116 (*1*) and Rule 74.]

Notice of termination of $\frac{\textit{Agreement}}{\textit{Settlement}}$ / *Award*

To

Date

Dear Sir/Sirs,

$\frac{\text{I}}{\text{We}}$ hereby give you notice that $\frac{\text{I}}{\text{We}}$ propose to terminate the $\frac{\text{Agreement}}{\text{Settlement}}$ / Award dated . regarding on the expiry of two months from the date of the notice.

Yours faithfully,

*

*Here insert the position which the person who signs this letter holds with the employer or name or names of the representative of employees as the case may be.

APPENDIX.

(*See* Rule 72-A.)

FORM I.

(Working, Reduction and Addition of Departments, Shifts and Workers.)

Name and Address of the undertaking :
Year and month :

PART I.

Normal Working.

1. Names of departments ...
2. Number of shifts :—
   (*a*) departments having only one.
   (*b*) departments having two.
   (*c*) departments having three.
3. Starting times of shifts ...
4. Closing times of shifts ...
5. Rest interval in each shift ...

PART II.

Actual Working.

6. Departments closed (give dates and reasons).

7. Departments reopened or newly started (give dates and reasons).

8. Number of operatives affected by 6 above.

9. Number of operatives affected by 7 above.

10. Shifts closed or partially closed (specify departments, sections, dates and reasons).

11. Shifts reopened or partially reopened, or newly started (specify departments, sections, dates and reasons).

12. Number of operatives affected by 10 above.

13. Number of operatives affected by 11 above.

PART III.

14. Operatives permanently or semi-permanently reduced (specify departments, sections, shifts and reasons).

15. Operatives permanently or semi-permanently added (specify departments, sections, shifts, and reasons).

Date

(Signature)

(Designation)

Note.—For the purposes of this Form operative means an employee other than a clerk.

FORM II.

(*Stoppages.*)

Month : Year :

Name and Address of the Undertaking :

Department(s) affected.	Dates (inclusive).		Number of working days in the period covered by column 3 read with column 2	Reasons.
	From	To		
1	2	3	4	5

Number of operatives affected.*			(Increase (+) or decreased (—) in the number of operatives affected as shown in columns 6 and 7 and date on which it occurred (according to shifts).†	Compensation paid.		Number of operatives.	Operatives played off.
Directly.	Indirectly.	Total.		Number of operatives receiving.	Amount.		Reasons.
6	7	8	9	10	11	12	13

(Signature)

Date (Designation)

Note.—For the purpose of this Form operative means an employee other than a clerk.

*This information should relate to the first day of the stoppage.

† Give variation if any in the numbers recorded in columns 6 and 7 and specify the dates of these variations.

FORM III.

(*Attendance and Absenteeism.*)

For the Fortnight ending Saturday the .....

Name and Address of the Undertaking :

Total number of operatives by departments and shifts.	Total number of working days for the fortnight by departments and shifts.	Total number of holidays during the fortnight (including Sundays).	Number of operatives on leave of any kind including leave granted retrospectively.	Total number of leave days during the fortnight (excluding Sundays and Holidays).*	Daily muster of Attendance and Absenteeism.		
						Attendance.	
					Date.	Permanent operatives.	Badlis given work.
1	2	3	4	5	6	7	8

Daily Muster of Attendance and Absenteeism—*contd.*

Attendance—*contd.*				Leave.		
Badlis not given work.	Temporary operatives.	Probationers.	Apprentices.	Permanent operatives.	Badlis.	Temporary operatives.
9	10	11	12	13	14	15

Daily Muster of Attendance and Absenteeism—*concld.*

Leave—*contd.*		Absent.				
Probationers.	Apprentices.	Permanent operatives.	Badlis.	Temporary operatives.	Probationers.	Apprentices.
16	17	18	19	20	21	22

Date

(Signature)

(Designation)

**Note 1.*—In column 5 enter the total number of days for which each operative was on leave during the fortnight.

Note 2.—For the purpose of this Form operative means an employee other than a clerk

MO-II Bk H 160—77

FORM IV.

(*Employment.*)

Name and Address of the Undertaking :

Year and Month.	Total number of operatives on the muster roll.	Total number of operatives required to run the under-taking at full capacity.*	Total number of operatives at the begin-ning of the month (1st day) according to shifts			Total number of operatives discontinued.	Number of operatives recruited.	Number of operatives reinstated.	Total number of operatives at the end of the month (last-day) according to shifts.		
			1st	2nd	3rd				1st	2nd	3rd
1	2	3	4			5	6	7	8		

Date (Signature)
(Designation)

Note 1.—For the purpose of this Form operative means an employee other than a clerk.

**Note 2.*—Here enter the number of operative required for optimum production—irrespective of availability of material, trade reasons and other circumstances—that the undertaking is capable of.

FORM V.

(*Wages.*)

Name and Address of the Undertaking : Month : Year :

Total number of operatives on muster-roll.	Details and Dates of Wage Payments.						Total Wage Bill for the month (total of columns 4, 5, 6 and 7).	Remarks.
	Dates of pay-days.	Number of employees who actually received wages.	Total wages paid in		Wages due but not paid or not claimed.			
			Cash.	Otherwise than in cash —(grain, cloth, accommodation etc.). State kind and value.	Cash.	Otherwise than in cash.		
1	2	3	4	5	6	7	8	9

Date (Signature)
(Designation)

Note.—In columns 5 and 7 if accurate figures are not available, enter approvimate ones, Method of calcuation adopted should be indicated in column 9.

FORM VI.

(*Welfare*)

Month : Year :

Name and Address of the Undertaking :

I. *Medical attention*—

(*a*) Average daily attendance at dispensary :

(*b*) Medical Officer—

(*i*) Full time :

(*ii*) Part time :

(*iii*) Total number of hours during the month put in by the Medical Officer at dispensary :

(*c*) Whether fees charged : if so mention rates and total amount collected during the month :

(*d*) Details of any industrial health enquiries conducted by the Medical Officer : (These may be given on a separate sheet attached to this Form).

II. *Safety measures* :—

Introduced* Discontinued* *Give Details.

III. *Amenities*—

	Working order.	Actual use.
1. (*a*) Drinking water taps ..		
(*b*) Washing water taps ..		
(*c*) Dining sheds ...		
(*d*) Rest sheds ..		
(*e*) Latrine seats—		
(*i*) For males ..		
(*ii*) For females ..		
(*f*) Urinals—		
(*i*) For males ..		
(*ii*) For females ..		

2. Aggregate daily attendance at creche :

Staff attending to your creche—

(*i*) (*ii*) (*iii*) (*iv*) (*v*)

3. Aggregate daily attendance at your school (if any) :

Total teaching staff :

4. Library (if any)—

(*i*) Total number of books :

(*ii*) Number of books borrowed during month :

(*iii*) Number of periodicals available :

(*a*) Dailies : (*b*) Weeklies ; (*c*) Monthlies :

5. Other amenities (Give details) :

Date

Signature.

Designation.

FORM VII.

(*Canteens.*)

Year.

Name and Address of the Undertaking :

1. Total floor area ..	
2. Kitchen area ..	
3. Total seating capacity ..	
4. Number of chairs ..	
5. Number of benches ..	
6. Average number of persons using the canteen each month.	
7. List of eatables and drinks normally supplied (mention amount charged for each)— (*a*) (*b*) (*c*) (*d*) (*e*) (*f*) (*g*) (*h*) (*i*)	
8. Do you supply regular meals ? If so, indicate the dishes below :— (*a*) (*b*) (*c*) (*d*) (*e*)	
9. Cost of a regular meal ..	
10. Number of meals that can be supplied by your canteen per hour.	

Date (Signature)

(Designation)

FORM VIII.

(*Premises.*)

Name and Address of the Undertaking :

Quarter ending Year.

I. Total area covered by your industrial premises :

II. Total area occupied by factory structures :

III. Total area not built upon :

IV. Total area occupied by—

(*a*) Dispensary.

(*b*) Canteen.

(*c*) Wash-places.

(*d*) Toilet facilities.

*(*e*) Library and Reading Room.

*(*f*) School.

(*g*) Creche.

(*h*) Any other amenities (specify).

V. Housing : (provided by employer/s)—

(*a*) Number of chawls and distance from factory.

(*b*) Whether electricity provided :

if so, what extra rent or charge, if any is levied—

(*i*) per one-room tenement.

(*ii*) per two-room tenement.

(*c*) Sanitary arrangements :

type of latrines provided.

(*d*) Total area of all accommodation.

(*e*) Number of 2-room tenements and area thereof.

(*f*) Number of 1-room tenements and area thereof.

(*g*) Rent per month—

(*i*) per single room.

(*ii*) per two-room.

(*h*) Total number of persons occupying 2-room tenements.

(*i*) Total number of persons occupying 1-room tenements.

(*j*) Number of outsiders other than your own workers residing in your chawls.

(*k*) Number of

	Latrines.	Urinals.	Water taps.	Washing places.	
(*i*) Single room tenements ...					
(*ii*) Two-room tenements ...					per floor

Date (Signature)

(Designation)

*If any.

FORM IX.

(*Rationalisation, Usages, Rules.*)

Name and Address of the Undertaking :

Quarter ending Year.

During the quarter under reference—

(1) Have you introduced any rationalisation or efficiency methods in the undertaking ? If so, give details.

(2) Have any customary concessions or privileges been withdrawn or any changes in usages been introduced in the undertaking ? If so, give details.

(3) Have any new rules of discipline been introduced or any alteration in existing rules made : If so, give details.

Signature

Date

Designation

FORM X.

(*Machinery*).

Name and Address of the Undertaking : Year.

Departments.	Type of machine (Give full details, e.g., group or individual drive, casablanca, 3-roller or 4-roller warp or weft, number of heads, etc.).	Number.	Year of manufacture.	Remarks.
1	2	3	4	5
Mixing-room ...				
Blow-room ...				
Card-room ...				
Drawing Frames ...				
Slubbing Inter and Roving ...				
Ring Frame and/or Mules ...				
Winding ...				
Warping ...				
Sizing ...				
Drawing-in ...				
Looms* ;				
(*a*) plain ...				
(*b*) drop-box ...				
(*c*) dobby ...				
(*d*) jacquard ...				

*State width.

Department.	Type of machine (Give full details, e.g., group or individual drive, casablanca, 3-roller or 4-roller warp or weft, number of heads, etc.)	Number	Year of manufacture.	Remarks.
1	2	3	4	5
Warehouse ...				
(*a*) folding ...				
(*b*) stamping ...				
(*c*) calendering ...				
Finishing ...				
Dyeing ...				
Reeling ...				
Baling ...				

Signature

Date

Designation

FORM XI.

(*Machinery Production.*)

Name and address of the Undertaking :

Year

I

Department.	Number of Machines/Spindles working.	Number of Machines/ Spindles not working.	Reasons for remaining idle.	Remarks.
1	2	3	4	5
Mixing-room ...				
Blow-room ...				
Card-room ...				
Drawing frames ...				
Slubbing, Inter and Roving ...				
Ring frames and/or Mules. ...				
Winding ...				
Warping ...				
Sizing ...				
Drawing-in ...				
*Looms ...				
(*a*) plain ...				
(*b*) drop-box ..				
(*c*) dobby ...				
(*d*) jacquard ...				
Finishing ...				
Dyeing ...				
Reeling ...				

*State width of all looms idle.

II

Section.	Diameter of front rollers.	Speed of front rollers.	Speed of spindles.	Remarks.
1	2	3	4	5
Drawing frames ...			(Not applicable).	
Speed frames ...				
(a) Slubbing ...				
(b) inter ...				
(c) roving ...				
Ring frames and/or Mules ...				

III

Card-room.

Speed of doffer.	Speed of Cylinder.	Remarks.
1	2	3

IV

If any change has occurred during the year in any of the items specified in Form XI, give full details of each such change.

V

State the strength of the special cleaning staff, if any employed to clean your machines, and give brief details of their duties.

VI

How many looms per weaver ?

How many sides per sider ?

Signature

Date

Designation

FORM XII.

(*Production, transactions and dealings.*)

Name and address of the Undertaking :

A—State—(1) Number of counts spun during the month :

(2) Varieties of counts spun during the month, in form below :—

	Varieties of counts spun.	Production (quantity).	Cost of production up to spindle point.	Cost of mixing per lb. up to spindle point.
(*a*) Warp ...				
(*b*) Weft ...				

B—State—

(*a*) total poundage of yarn sold in the open market for :—

(*i*) Grey.

(*ii*) Bleached.

(*iii*) Dyed.

(*b*) total poundage consumed in the Weaving Department.

Cost per lb. of dyed and bleached yarn in the each count produced.

C—State the varieties of cloth produced, the total poundage of each variety and the cost of production per lb. in the form shown below :—

Varieties of cloth.	Amount of production in lbs.	Cost of production per lb. up to baling.

D—Have you a system of selling your production through guaranteed brokers for (*a*) yarn and (*b*) cloth ? If so, please give their names and addresses.

E—(*i*) What is your system in making purchases of—

(*a*) Machinery.

(*b*) Cotton.

(*c*) Stores.

(*ii*) Is there any commission or rebate received against any of these purchases ? If so, please state the amounts received during the month and the manner in which it is credited.

F—State :

(*a*) total waste produced from Blow room to spinning.

(*b*) total waste produced from winding to weaving.

(*c*) total fents and rags produced in weaving, dyeing and finishing.

(*d*) total weight of all varieties of waste produced.

G—Particulars of Managing Agency terms.

H—Details and percentages of overhead charges which are not included in the cost of production.

Signature

Date Designation

FORM XIII.

Page No.

List of Permanent* / Badli / Temporary. Operatives employed in the.....Mill

in the month of..... 19 . Occupation.....

Serial No.	Name of Worker.	Age.	Sub-Occupation.	Ticket No.	Shift in.	Remarks. (Not to be filled by Mills)	Master Register No. (Not to be filled by Mills)
1	2	3	4	5	6	7	8

* Separate statement should be submitted for each category of workers.

FORM XIV.

List of Badli (Permanent* / Temporary) Operatives in respect of changes in the rolls that have been effected.

Undertaking—

Name—

Address—

Details regarding changes for the Week / Fortnight / Month ending the 19 .

Page No.	Serial No.	Name of the Employee and Local Address.	Occupation and †Sub-occupation.	Ticket No.
1	2	3	4	5

Shift No. in month of.	Nature of change.‡	Date of change.	Service Certificates issued or not.	Remarks.
6	7	8	9	10

*Separate statement should be submitted for each category of workers.
†Occupations should be shown in symbols.
‡Use following symbols :—
Discharged : T. Dismissed : D. Left of his own accord : L.
Retrenched : R. Sent away : S. Died : Died.

FORM XV.

(*Anticipated closure.*)

(1) Name and address of the undertaking.

(2) Number of shifts for which each department is being worked at present together with the number of employees.

(3) Stock of coal (in tons and cwts.)—(*i*) held on the date of report, (*ii*) average monthly consumption.

(4) Supply of electric power (state briefly whether the supply is adequate for running the usual number of shifts).

(5) Supply position of raw material (if there is shortage of any raw material, it should be specified clearly stating reasons for the shortage and the quantity required immediately to maintain continuous production).

(6) Stock of cotton in bales of 400 lbs.—(*i*) Held on the date of report, (*ii*) Average monthly consumption.

(7) Brief review of labour situation.

(8) Stocks of cloth in packed bales converted into full bales :—

(*i*) Held on the date of report—

(*a*) Sold but not delivered,

(*b*) Not sold,

(*c*) Total (*a*) plus (*b*).

(*ii*) Average monthly production in the last six months (in bales).

(9) Stocks of surplus yarn available for distribution held in full bales :—

(*i*) Held on the date of report—

(*a*) Sold but not delivered.

(*b*) Not sold,

(*c*) Total (*a*) plus (*b*).

(*ii*) Average monthly production in the last six months (in bales).

(10) Nature of total or partial closure contemplated.

(11) Date of the anticipated closure.

(12) Precise reasons for the anticipated closure.

(13) Extent to which working of the undertaking will be affected by the anticipated closure—

(*a*) (*i*) Total number of spindles,

(*ii*) Number of spindles likely to remain idle,

(*b*) (*i*) Total number of looms,

(*ii*) Number of looms likely to remain idle,

(*c*) Any other machinery or department likely to remain idle.

(14) Number of employees affected.

(15) Number of hours or days for which (*a*), (*b*) and (*c*) of item 14 are expected to remain idle.

(16) Number of working hours per day or number of working days for which the different teams of employees are expected to remain idle (state the number of employees in each case).

Date (Signature)

(Designation)

G. N., Lab. D., No. 1237/46, dated 17th January 1949 (B. G., Pt. IV-B, p. 64).

S. 123. Bombay Wage Board Rules, 1948.

Amended by G. N., Lab. D., No. 708/48, dated 22nd June 1949.
Amended by G. N., Lab. D., No. 708/48, dated 21st November 1949.

In exercise of the powers conferred by section 123 of the Bombay Industrial Relations Act, 1946 (Bom. XI of 1947), the Government of Bombay is pleased to make the following rules, namely :—

1. These rules may be called the Bombay Wage Board Rules, 1948.
2. In these rules, unless there is anything repugnant in the subject or context—

(*i*) "Act" means the Bombay Industrial Relations Act, 1946;
(*ii*) "Chairman" means a Chairman of a Wage Board;
(*iii*) "Chamber meeting" means a meeting of a Wage Board held in Chambers for arriving at a decision on an industrial matter or industrial disputes referred to it;
(*iv*) "Member" means a Member of a Wage Board;
(*v*) "Secretary" means a Secretary of a Wage Board;
(*vi*) "Section" means a Section of the Act;
(*vii*) "Sitting" means a sitting of a Wage Board held for the purpose of conducting enquiry into and for hearing any industrial matter or industrial dispute referred to it;
(*viii*) "Statement of claim" means a statement filed by or on behalf of a party on whose claim a reference arises;

(*ix*) "Written statement" means a statement filed by an opponent in reply to a statement of claim.

3. A Wage Board shall have an official seal in the form of a circular rubber stamp one and a half inches in diameter.

4. Subject to the provisions of section 86C, the State Government may by an order notified in the *Official Gazette* refer to a Wage Board for decision any industrial matter or dispute relating to leave with or without pay.

5. The sittings or Chamber meetings of a Wage Board shall be held at such time and place as the Chairman may fix.

6. (1) On receipt of a reference from the State Government, the Secretary shall, under the instructions of the Chairman, issue directions to the parties concerned for the preparation and filing of the required number of copies of statement of claim, written statement or such other statistical statements as may be deemed necessary or for the exchange of such statements among themselves, and communicate to them the dates for submission and exchange of such statements and for the hearing of the reference.

(2) The Secretary shall send copies of the directions issued under sub-rule (1) to the Members.

(3) The Chairman may convene a sitting or a Chamber meeting of the Wage Board before giving instructions for issuing directions under sub-rule (1).

7. At all sittings and Chamber meetings all the members of a Wage Board shall remain present but proceedings shall not be invalidated on account of the absence of any Member or Members if the Chairman is satisfied that for good and sufficient reasons such Member or Members could not remain present: provided, however, that no sittings or Chamber meetings shall be held in the absence of the Chairman or the entire group of Members representing employers or employees.

8. Any vacancy in a Wage Board shall be filled by the State Government in accordance with the provisions of section 86-B and the name of the person appointed to such vacancy shall be notified in the *Official Gazette*.

9. Subject to the provisions of section 33, in any proceedings before a Wage Board parties may appear by duly authorised legal practitioner or by an officer of the union which has a right to represent the party under section 30 or by the Government Labour Officer of the local area concerned or an officer of an employers' association, as the case may be.

10. If, without good cause shown, any party to the proceedings before a Wage Board fails to attend or to be represented at the proceedings, the Wage Board may proceed as if the party had duly attended or had been duly represented.

11. When in any matter it appears necessary that Government should be represented and heard on any point arising therein, the Wage Board shall give intimation of the matter to the Secretary to Government in the Labour Department.

12. The proceedings before a Wage Board shall be held in public: provided that the Wage Board may at any stage direct that any witnesses shall be examined or the proceedings shall be held *in camera*.

13. (1) A Wage Board may for the purpose of any reference made to it form a Committee or Committees for a local area or areas from among its Members and may co-opt on such Committee or Committees such other person or persons, representing employers and employees from such local area or areas as it deems necessary: provided that the number of persons representing employees and employers respectively on the Committee shall be equal.

(2) A Committee so formed shall make such enquiry as may be directed by the Wage Board and submit its report to the Wage Board.

14. On receipt of a report under sub-rule (2) of rule 13, the Wage Board shall after holding further hearing, if necessary, decide the matter.

15. All questions arising for any decision at any meeting of a Wage Board shall be decided by the majority vote of the Members present (including the Chairman). In the event of an equality of votes the Chairman shall also have a second or casting vote.

16. Every order or decision of a Wage Board shall be signed by all the Members of the Wage Board concerned and shall bear the official seal.

17. (1) A Wage Board shall, save in cases falling under section 86F, forward copies of any order or decision made by it to the parties concerned, the Commissioner of Labour, the Registrar and the Industrial Court.

(2) On receipt of a copy of such order or decision, the Registrar shall enter it in the register kept for the purpose and shall publish it in the *Official Gazette.*

18. The Chairman may correct any clerical mistake or error arising from an accidental slip or omission in any order or decision made by it.

19. The Chairman and Members of a Wage Board or any other person authorised in writing by the Chairman in this behalf may at any time during the pendency of any industrial matter or dispute before Wage Board enter any building, factory, workshop or other place or premises whatsoever and inspect the same or any work, machinery, appliance, or articles therein or interrogate any peson therein in respect of anything situated therein or any matter relating to the said industrial matter or dispute.

20. Minutes of the proceedings at the sittings and Chamber meetings shall be maintained by the Wage Board and shall form part of the record of the proceedings.

APPENDIX A.

The Industrial Court Regulations, 1947 (B. G., Pt. IV-B, p. 617).

S. 92, Industrial Court Regulations, 1947.

The following regulations have been made by the Industrial Court in exercise of the powers conferred under section 92 of the Bombay Industrial Relations Act, No. XI of 1947 :—

CHAPTER I.

General.

1. These regulations may be cited as "The Industrial Court Regulations, 1947", and shall come into force on the day the Bombay Industrial Relations Act (No. XI of 1947) comes into force by virtue of a notification issued by the State Government under section 2 (2) of the said Act.

2. (1) In these regulations unless the context otherwise requires—

(*a*) "*Act*" means the Bombay Industrial Relations Act (No. XI of 1947).

(*b*) "*Appeal*" means a Memorandum of Appeal filed by an appellant indicating the grounds of appeal and relief claimed against the decision or an order of a lower court or authority where such appeal is permissible under the Act.

(*c*) "*Application*" means any application made to the Court under the Act or these regulations.

(*d*) "*Court*" and "*This Court*" mean the Industrial Court as constituted under section 10 of the Act and includes President or Member thereof.

(*e*) "*Lower Court*" means a Labour Court as constituted under section 9 of the Act.

(*f*) "*Matter*" means any application, appeal, petition, reference or submission filed in or made to the Industrial Court under the provisions of the Act.

(*g*) "*Order*" means any order made by the Industrial Court in any proceedings before it other than an award.

(*h*) "*Party*" means the applicant, petitioner, appellant, opponent, respondent or any employer or employee concerned in any application, petition, appeal, submission or reference.

(*i*) "*Petition*" means any petition made to the Court under the Act or these regulations.

(*j*) "*Registrar*" means the Registrar of the Industrial Court.

(*k*) "*Registrar of Unions*" means the Registrar as defined in section 3 (*31*) of the Act and appointed under section 5 of the Act.

(*l*) "*Section*" means a section of the Act.

(*m*) "*Statement of Claim*" means a statement filed by or on behalf of a party on whose claim a submission or reference arises.

(*n*) "*Written Statement*" means a statement filed by an opponent in reply to a statement of claim or to an application or petition.

(2) Words and expressions not defined in these regulations shall have the same meanings assigned to them under the Act.

CHAPTER II.

Sittings, Benches and Vacations.

3. Subject to the provisions of section 92 (*2*) the President may constitute a Bench of one or more members to decide any of the matters filed in or referred to the Court and the Bench so constituted shall exercise the jurisdiction and the powers vested in the Court.

4. An application for review under section 37 shall ordinarily be disposed of by the same Bench which heard the original matter sought to be reviewed, provided, however, that if any member or members of the Bench which disposed of the original matter has or have ceased to be a member or members of the Court, it shall be disposed of by a Bench consisting of the same number of members as the Bench which made the order sought to be reviewed.

5. The Court may, with the consent of the parties, act notwithstanding any vacancy or absence of any member in any Bench constituted by the President to decide any matter after the commencement of proceedings and no act, proceeding or determination of the Court shall be called in question or invalidated by reason of any such vacancy or absence, provided such consent has been first obtained; and provided, further that if any of the parties does not give such consent, the President may constitute another Bench to hear the matter *de novo*.

6. Any Bench of one or more members of the Court hearing a matter may refer it to a Full Bench of the Court, if in its opinion, it involves important questions of law or fact. The President may constitute a Full Bench of two or more members.

7. A Bench constituted under any of the regulations 3, 4, 5 and 6 may hold its sittings at such place or places as the President may direct.

8. The Court may, with the approval of the President, in any matter in which it appears expedient to do so, call in the aid of one or more assessors, and may settle the matter wholly or partially with the assistance of such assessor or assessors.

9. The assessor or assessors may be paid such remuneration as the Government may fix by a general or special order on the recommendation of the President having regard to the status, position and calling of such assessor or assessors.

10. The Court shall ordinarily sit on week days, except Saturdays, from 11 a.m. to 5 p.m. with lunch interval from 2 p.m. to 3 p.m., subject to such alterations as the presiding member may direct on any particular day or days.

11. Subject to such general or special order as the President may pass, the Court shall observe the following vacations :—

(1) The summer vacation for six weeks ordinarily commencing from the last of April and ending with the first week of June ;

(2) The October vacation for two weeks ordinarily commencing from the second week and ending with the third week of October.

12. The Court will be closed on (1) such holidays as are declared by Government under the Negotiable Instruments Act, and (2) Christmas holidays ordinarily commencing on 24th of December and ending with 2nd of January.

13. The dates of vacations and holidays shall be notified in the *Bombay Government Gazette.*

14. The President may appoint one or more members of the Court for hearing and disposal of urgent matters during vacations.

15. The dates of hearing during the vacations shall be fixed by the members appointed.

CHAPTER III.

Officers and Office hours.

16. The Registrar shall have the custody of the records of the Court and shall exercise such functions as are assigned to him by these Regulations or by the President.

17. The Registrar may with the permission of the President assign such function or functions to any of the officers or members of the office staff subordinate to him.

18. The office of the Court for the purpose of admitting any business shall be open ordinarily, except on Sundays and close holidays, on Monday to Friday from 10-30 a.m. to 6 p.m. but no work unless of an urgent nature shall be admitted after 4-30 p.m. On Saturdays the office shall remain open between 10-30 a.m. to 2-30 p.m. but no work unless of an urgent nature shall be admitted after 1 p.m.

19. During vacations and Christmas Holidays the office shall observe such hours as may be fixed by the President.

20. The Court shall have an official seal of its own, which shall be kept in the custody of the Registrar.

CHAPTER IV.

Appearance in Court.

21. Subject to the provisions of section 33, in any proceedings before the Court parties may appear in person or through any other person or by a duly authorised counsel, attorney, advocate, pleader, representative or by an officer of a representative union, qualified union, primary union or approved union or the Government Labour Officer of the local area concerned or by an officer of an employers' association, as the case may be.

22. Every person except a counsel authorised to appear under regulation 21 shall file a warrant of authority in Form 1 signed by the person authorising him.

CHAPTER V.

Applications to the Registrar.

23. Applications in the following matters shall be made to the Registrar by a praecipe in Form 2 or a letter addressed to him—

(*i*) for certified copies of documents ;

(*ii*) for extension of time to file a written statement, statement of claim, any other stratement or document ;

(*iii*) for issue of summonses to witnesses and notices for appearance in any matter filed in or referred to the Court ;

(*iv*) for inspection of documents filed in the Court ;

(*v*) for withdrawal of matters filed in the Court before these are placed for hearing on the board ;

(*vi*) for return of exhibits.

24. The Registrar may in his discretion make any order on such applications or may submit the same to the President or Member for orders.

CHAPTER VI.

Business in Chambers.

25. The following matters shall be disposed of by any Member in chamber :—

(*i*) petition for adding any parties to the appeal, application, submission, reference, etc.

(*ii*) petition for bail.

(*iii*) application for stay order ;

(*iv*) application for adjournment by consent of both the parties for any matter placed for hearing on the board ;

(*v*) applications for condoning delay in presenting appeals within the period of limitation prescribed ;

(*vi*) application under section 33 (*c*) for permission to appear in proceedings other than proceedings before a Labour Court or this Court ;

(*vii*) all other applications of a miscellaneous nature.

26. Any of the chamber matters may be decied either *ex parte* or after hearing the other side as the Member in chamber may think fit.

27. Where bail is granted, the person concerned shall execute a Bail Bond in Form 6.

CHAPTER VII.

Filing of Appeals, Applications, Petitions or Statements in Submissions and References.

28. (*i*) In any matter where the persons or the parties affected are numerous having the same interest, one or more of such parties may with the permission of the Court proceed or defend in such matter on behalf of or for the benefit of all persons so interested. The Court shall in such cases direct notice to be given to all such persons at the expense of the party filing the matter either by personal service or where from the number of parties or, any other cause such service is not reasonably practicable, by public advertisement and by causing the notice with its translation in the regional language or languages to be affixed by the party filing the matter at the entrance of the last known place of employment of such persons or parties. The person affixing the notice and putting up the advertisement shal file an affidavit in the Court of his having done so.

(*ii*) Any person on whose behalf the matter is filed or defended under sub-regulation (*i*) may apply to the Court to be joined as a party to such matter. The Court may grant such application if it is satisfied that his interests will be seriously affected to his prejudice if he is not joined as a party.

28-A. In any matter before the Court, the Court may, at any stage of the proceedings, either upon or without the application of any party, order that the name of any party or parties improperly joined be struck out and that the name of any party or parties whose presence before the Court may be necessary in order to enable the Court effectually and completely to adjudicate upon and to settle all the questions involved in the dispute be added.

29. Every application, petition, appeal, written statement or statement of claim to be made to the Court under the Act or directed to be filed under these Regulations shall be drawn up in the relevant Forms 3, 4 or 5 prescribed in Schedule I, and four copies thereof shall be filed in the office or sent to the Registrar by registered post.

30. The memorandum of appeal shall be filed within the period of limitation prescribed in section 84 (*2*) on working days, during the business hours, specified in regulations 18 and 19.

31. The memorandum of appeal shall be accompanied by a certified copy of the order or decision appealed against.

32. Every application, petition or appeal shall be scrutinised by the Registrar and if it is in order shall be admitted to the file, entered in the register, and given the case number.

33. If the application, petition or appeal is not in order by reason of any formal defect, it shall be returned by the Registrar, for remedying the defect, if any, within a specified time.

34. If the Registrar thinks that any application, petition or appeal may be fixed for preliminary hearing, the Registrar may subject to such order as may be made by the President or by a Member send notice in Form 7 to the applicant, petitioner or appellant to appear before the Court at the time and place mentioned therein to show cause why the application, petition or appeal may not be summarily dismissed.

35. If any of the parties applies for determining certain matter on preliminary issues, the President or a member may proceed to determine such issues after issuing notice to the opposite party.

36. If the application or petition is not summarily dismissed the Registrar shall cause a notice in Form 8 to be given to the opponent directing him to file a written statement within a specified time.

37. After any appeal is filed in or any submission or reference is made to the Court, the Registrar shall cause a writ in Form 9 to be issued to the State Government, the Labour Court, the Civil or Criminal Court, the Commissioner of Labour, the Registrar of Unions, the Conciliator, or any other officer or authority concerned as the case may be and shall call for the original records and proceedings of the case.

38. As soon as any submission or reference is admitted to the file, the Registrar shall give notices in Forms 10, 11, 12 or 13 to the parties to file their statement of claim or written statement as the case may be within the time stated in the notice.

39. The statement of claim and the written statement referred to in regulation 38 shall be drawn up in Forms 4 and 5 respectively.

40. After all the statements required to be filed by the parties are received or after the expiry of the date for filing the statements, the matter shall be set down for hearing before a Bench constituted by the President, and the Registrar shall give notice thereof in Form 14 to the parties to appear before the Court at such time and place mentioned therein.

CHAPTER VIII.

Issue of Summonses, Notices, Other process, etc.

41. When in any matter it appears necessary that Government should be represented and heard on any point arising therein, the Court shall direct the Registrar to give intimation of the matter to the Chief Secretary to the Provincial Government in Form 15.

42. In any matter coming before the Court, where it appears on application of any of the parties or otherwise, that the presence of the Government Labour Officer of the local area concerned is necessary, a notice in Form 16 may be given to him requiring him or his deputy to attend the Court at such time and place as mentioned therein.

43. Every writ, summons, notice, warrant or other mandatory process and every order, award or certified copy of any document shall be signed by the Registrar with the day and year of signing and shall be sealed with the official seal of the Court.

44. The service of every writ, summons, notice, warrant or other mandatory process and of every order or award shall be effected either by hand delivery or through registered post or as provided in the Order V of the Civil Procedure Code, 1908, as may be expedient.

CHAPTER IX.

Procedure in the Court.

45. The Court shall call upon the parties in such order as it may think fit to state their case.

46. Each witness shall give his evidence on oath or on solemn affirmation as the Court may require, and shall give the following particulars, namely, (1) his name, (2) age, (3) occupation and (4) religion, if any.

47. The Court may accept, admit or call for any evidence at any stage and in any manner it thinks fit.

48. A memorandum of the substance of a witness' testimony shall be made in such manner as the Court may order.

49. The Court may require any fact to be proved by affidavits.

50. In any matter, on the application of either party or otherwise the Court may may direct the issue of a commission in Form 17 for recording oral evidence or for conducting any local inquiry or investigation.

51. The Court may direct any party to pay such costs of the commission as it considers reasonable.

52. Where a party desires to rely upon any statistical statement the party shall supply one copy each to the members of the Bench, one copy to the office of the Court and one copy to each representative appearing for the other side.

53. Where statistical statements are to be filed as exhibits, on each such statements shall be put the following particulars, namely (1) the source from which the figures have been compiled and (2) the name of the party submitting the exhibit.

CHAPTER X.

Execution of order of Costs, Fine and Imprisonment.

54. The Registrar shall be the taxing officer of the Court.

55. Subject to any provision of any statute or of these Regulations, the costs of or incidental to all proceedings shall be in the discretion of the Court.

56. The order of costs made by the Court in any matter shall be drawn up by the Registrar in Form 18.

57. Any order of fine or compensation directed by the Court shall be drawn up in Form 19 and a copy thereof together with warrant in Form 20 shall be forwarded to the Collector of the District concerned for the purpose of execution as if it were recovery of arrears of land revenue under section 110.

58. Where the Court makes any order of imprisonment the accused shall be immediately apprehended by the police officer on duty who on obtaining a Jail Warrant in Form 21 signed by the Registrar shall deliver the accused to Jail authority to be taken in the custody of the Jail.

59. Copies of the awards or other decisions of the Court shall be supplied by the Registrar free of charge to the parties concerned, and the Labour Court, Civil or Criminal Court, Commissioner of Labour, Registrar of Unions or any other authority, Court or Board concerned. One copy in each case shall also be supplied to Government. Any additional copy required by any party, person or authority may be supplied at the discretion of the Registrar free of charge or at the cost prescribed for certified copies of documents in Schedule II.

CHAPTER XI.

Miscellaneous.

60. Where any fact is to be proved by affidavit, it shall be drawn up in Form 22, shall bear the stamp prescribed in schedule II and shall be sworn or affirmed in the presence of the Registrar.

61. The Court may correct in any award or order that it issues any clerical mistake or error arising from an accidental slip or omission.

62. If any question arises as to the interpretaion of any order made by the Court in any matter, the State Government or any party to the order may apply to the Court for a decision on such question and the Court may decide the matter after hearing the parties.

63. The Court or any other person authorised in writing by it in this behalf may at any time during the pendency of the dispute enter any building, factory, workshop or other places or premises whatsoever and inspect the same or any work, machinery, appliances or articles therein or interrogate any person therein in respect of anything situated therein or any matter relating to the subject matter of the dispute.

64. The Forms set out in Schedule I to these Regulations or forms substantially to the like effect with such variations as the circumstances of each case may require, shall be used for all cases where the forms are appropriate.

65. Nothing in these Regulations shall be deemed to limit or otherwise affect the power of the Court to make such order as may be necessary for the ends of justice or to prevent an abuse of the process of the Court.

SCHEDULE I.

FORMS.

Form No. 1.

(*Warrant of Authority.*)

IN THE INDUSTRIAL COURT, BOMBAY.

No. of

In the matter of

Address :

Date :

To

The Registrar,
Industrial Court,
Bombay.

Dear Sir,

Be pleased to note that I/we have appointed Mr. to appear for me/us in the above matter.

Dated this day of 19 .

Yours faithfully,

Accepted

(Signature)

(Signature)

Form No. 2.

(*Application for certified copy of documents.*)

Address :

To

The Registrar,
Industrial Court, Bombay.

Subject.—Application / Petition / Appeal / Submission / Reference No. of 19

Dear Sir,

Be pleased to supply the undersigned with certified copy/copies of in the above matter. The copy may be sent by V. P. P. (or delivered to me) at the above address and I undertake to pay for the same.

Dated this day of 19 .

Yours faithfully,

(Signature)

(This form may be adopted with suitable alterations in making applications for extension of time to file statement, for withdrawal of matters, for adjournment, for inspection of documents, etc. or for any application mentioned in Regulation 23.)

Form No. 3.

(*Application, Petition or Memorandum of Appeal.*)

IN THE INDUSTRIAL COURT, BOMBAY.

Application / Petition / Appeal No. of 19 .

(1) A ... Applicant/s.
(2) B ... Petitioner/s.
(3) C ... Appellant/s.

Address :

versus

(1) X
(2) Y ... Opponent/s. Respondent/s.
(3) Z

Address :

Application/Petition/Appeal under section
of the Bombay Industrial Relations
Act, No. XI of 1947, read with

In the matter of

May it please the Honourable Court,

The applicant/s / petitioner/s / appellant/s abovenamed beg/s respectfully to submit as follows :—

(1) That
(2) That
(3) That

Certified copy of the order appealed against is enclosed herewith.

The applicant/s / petitioner/s / appellant/s therefore pray/s that the Court may be pleased to decide

(1) That
(2) That
(3) That

The applicant/s / petitioner/s / appellant/s beg/s to amend or add to or make alterations in the application/petition/appeal if and when necessary.

Date.

Signature or thumb impression of
applicant/petitioner/appellant.

The applicant/s / petitioner/s / appellant/s does/do solemnly declare that what is stated above is true to the best of his/their knowledge, belief and information. This verification is signed at . on day of 19 .

Signature or thumb impression of
applicant/s petitioner/s appellant/s.

Drafted by ...

Place.

Form No. 4.

(*Statement of Claim.*)

IN THE INDUSTRIAL COURT, BOMBAY.

Reference/Submission No. of 19 .

BETWEEN

(*a*) (*b*) (*c*)
Address : } First Party.

AND

(*x*) (*y*) (*z*)
Address : } Second Party.

Reference/Submission under section of the Bombay Industrial Relations Act, No. XI of 1947.

In the matter of

May it please the Honourable Court,

The abovenamed beg/s respectfully to submit the statement of claim as follows :—

(1) That
(2) That
(3) That

The beg/s to amend add to or make alterations in the statement of claim if and when necessary.

Date.

Signature or thumb impression.

The does/do solemnly declare that what is stated above is true to the best of his/their knowledge, belief and information. This verification is signed at on day of 19 .

Signature or thumb impression.

Drafted by

Place

Form No. 5.

(*Written Statement.*)

IN THE INDUSTRIAL COURT, BOMBAY.

Application / Petition / Submission / Reference No. of 19

(1) A ... Applicant(s) / Petitioner(s) / First Party.
(2) B ...
(3) C ...

Address :

versus

(1) X ... Opponent(s) / Second Party.
(2) Y ...
(3) Z ...

Address :

In the matter of

May it please the Honourable Court,

The opponent(s) / second party abovenamed beg(s) respectfully to submit his/their written statement as under :—

(1) That
(2) That
(3) That

The Opponent(s) / Second party beg(s) to amend or add to or make alterations in the written statement if and when necessary.

Date.

Signature or thumb impression of opponent(s)/second party.

The opponent(s)/second party does/do solemnly declare that what is stated above is true to the best of his/their knowledge, belief and information. This verification is signed at on day of 19 .

Signature or thumb impression of opponent(s)/second party.

Drafted by

Place

Form No. 6.

(*Bail Bond.*)

IN THE INDUSTRIAL COURT, BOMBAY.

Appeal No. of 19 .

Appellant (Original)

versus

Respondent (Original)

In the matter of conviction by
and sentence of

I having been convicted by of the offence of and sentenced to have filed the above appeal in the Industrial Court, Bombay, and have been granted bail, do hereby bind myself to attend the Industrial Court, whenever required to do so until the said appeal is finally decided and/or this Bail Bond is cancelled, in witness whereof I offer Mr. to stand as a surety for me.

Signature or thumb impression.
Date : Address.

I do hereby declare that I stand surety for the abovenamed and that he shall attend the Industrial Court whenever required until the appeal (No. of 19) filed by him is finally decided and/or this Bail Bond is cancelled, and in case of his making default therein, I hereby bind myself to forfeit to Government the amount of Rs.

Signature or thumb impression.
Date : Address :

In the presence of
(1) } Witnesses.
(2)

Before me,

Registrar.

Form No. 7.

(*Notice of Preliminary Hearing.*)

IN THE INDUSTRIAL COURT, BOMBAY.

No. of 19 .

In the matter of

NOTICE.

PLEASE TAKE NOTICE that the above matter will be taken up for preliminary hearing by the Court at or at such time immediately thereafter according to the convenience of the Court on

in

You are hereby required to appear in person or through any other person or by a duly authorised counsel, advocate, attorney, pleader or a representative, as the case may be, at the aforesaid time and place and to show cause, if any, why the above matter should not be summarily dismissed.

By order of the President,

Seal.

Registrar,
Industrial Court.

No.

Office of the Industrial Court,
High Court, Bombay.
day of 19 .

To

Form No. 8.

(*Notice to file Written Statement in Application or Petition, etc.*)

IN THE INDUSTRIAL COURT, BOMBAY.

Application/Petition No. of 19 .

(1) A ...
(2) B ... } Applicant/s / Petitioner/s
(3) C ...

Address :

versus

(1) X ...
(2) Y ... } Opponent/s
(3) Z ...

Address :

Application/Petition under section of the Bombay Industrial Relations Act, No. XI of 1947, read with

In the matter of

NOTICE.

WHEREAS abovenamed has filed in this Court, a copy whereof is enclosed herewith, NOTICE is hereby given to you that if you so desire, four copies of your written statement may be filed in this office on or before and that a copy thereof may be supplied to the abovenamed and to inform the undersigned that this has been done.

2. The time and the place of hearing will be announced later.

By order of the President,

Seal.

Registrar,
Industrial Court.

No.

Office of the Industrial Court,
High Court, Bombay.
day of 19 .

To

Form No. 9.

(*Writ of records and proceedings.*)

No. of 19 .

In the matter of

To

Greeting :

WHEREAS the above matter has been admitted to the file AND WHEREAS it is necessary to look into the original papers, records and proceedings, etc. relating thereto, before the final order or award is made, you are requested to send to this Court all the books, papers, documents, records, proceedings, exhibits, files, etc., connected with the above matter, on or before
together with this Writ under your hand and seal.

By order of the President,

Seal.

Registrar,
Industrial Court.

No.

Office of the Industrial Court,
High Court, Bombay.
day of 19 .

No.
Date :

The undersigned presents compliments to the Registrar, Industrial Court, and sends herewith the records, files, etc., as per the particulars given below.

Signature . .

Designation

Particulars of Records.

No.

OFFICE OF THE INDUSTRIAL COURT,
High Court, Bombay.

The matter having been finally decided by the Court, the undersigned presents compliments to and is directed to return the above mentioned records, files, etc.

Registrar,
Industrial Court.

To

Form No. 10.

(*Notice to file statement of claim in a Submission.*)

IN THE INDUSTRIAL COURT, BOMBAY.

Submission No. of 19 .

BETWEEN

AND

In the matter of

NOTICE.

WHEREAS the parties abovenamed have submitted the above dispute to the arbitration of this Court, PLEASE TAKE NOTICE that you are hereby required to file a statement of claim (in four copies) in connection with the said dispute on or before the and that a copy of the same may be handed over by you simultaneously to the other side and to inform the undersigned that this has been done.

2. The time and the place of hearing will be announced later.

By order of the President,

Seal.

Registrar,
Industrial Court.

No.
Office of the Industrial Court,
High Court, Bombay.
day of 19 .

To

Form No. 11.

(*Notice to file written statement in Submission.*)

IN THE INDUSTRIAL COURT, BOMBAY.

Submission No. of

BETWEEN

AND

In the matter of

NOTICE.

WHEREAS the parties abovenamed have submitted the above dispute to the arbitration of this Court, AND WHEREAS has been directed to file a statement of claim in this office on or before a copy whereof will be handed over to you simultaneously by him/them on or before that day, PLEASE TAKE NOTICE that you are hereby required to file in this office on or before the four copies of the written statement in reply to the statement of claim that you may receive and that a copy of the same may be handed over by you simultaneously to the other side and to inform the undersigned that this has been done.

2. The time and the place of hearing will be announced later.

By order of the President,

Seal.

Registrar,
Industrial Court.

No.

Office of the Industrial Court,
High Court, Bombay.

day of 19 .

To

Form No. 12.

(*Notice to file statement of claim in a Reference.*)

IN THE INDUSTRIAL COURT, BOMBAY.

Reference No. of 19 .

BETWEEN

AND

In the matter of

NOTICE.

WHEREAS by Government Notification, Political and Services Department No. dated the the above matter has been referred to the arbitration of this Court, PLEASE TAKE NOTICE that you are hereby required to file a statement of claim (in four copies) in this office on or before
in connection with the said dispute and that a copy of the same may be handed over by you simultaneously to the other side and to inform the undersigned that this has been done.

2. The time and the place of hearing will be announced later.

By order of the President,

Seal

Registrar,
Industrial Court.

No.

Office of the Industrial Court,
High Court, Bombay.

day of 19 .

To

MO-1 Bk H 100—79

Form No. 13.

(*Notice to file written statement in a Reference.*)

IN THE INDUSTRIAL COURT, BOMBAY.

Reference No. of 19 .

BETWEEN

AND

In the matter of

NOTICE.

WHEREAS by Government Notification, Political and Services Department, No. dated the the above matter has been referred to the arbitration of this Court, AND WHEREAS has/have been directed to file a statement of claim in this office on or before a copy whereof will be handed over to you simultaneously by him/them on or before that day, PLEASE TAKE NOTICE that you are hereby required to file in this office on or before the four copies of the written statement in reply to the statement of claim that you may receive and that a copy of the same may be handed over by you simultaneously to the other side and to inform the undersigned that this has been done.

2. The time and the place of hearing will be announced later.

By order of the Persident,

Seal.

Registrar,
Industrial Court.

No.

Office of the Industrial Court,
High Court, Bombay.
day of 19 .

To

Form No. 14.

(*Notice of hearing.*)

IN THE INDUSTRIAL COURT, BOMBAY.

No. of 19 .

In the matter of

NOTICE.

WHEREAS the above matter has been admitted to the file, PLEASE TAKE NOTICE that the said matter will be taken up for hearing at or at such time immediately thereafter according to the convenience of the Court on in You are hereby required to appear in person or through any other person or by a duly authorised counsel, advocate, attorney, pleader or a representative or by an officer of a representative union, qualified union, primary union or approved union or the Government Labour Officer of the local area concerned, as the case may be, at the aforesaid time and place and to continue to remain present until the said matter has been finally disposed of and to produce before the said Court on those days all books, documents, etc. which may be in your possession or under your control and in any way relating to the matters in dispute and witnesses, if any.

By order of the President,

Seal.

Registrar,
Industrial Court.

No.

Office of the Industrial Court,
High Court, Bombay:

day of 19 .

To

MO-I Bk H 160—79a

Form No. 15.

(Intimation to Government for appearance.)

IN THE INDUSTRIAL COURT, BOMBAY.

No. of 19

In the matter of

INTIMATION.

WHEREAS the above matter will be taken up for hearing at or at such time immediately thereafter according to the convienence of the Court on in AND WHEREAS it appears necessary that Government should be represented and heard on points arising therein, arrangement may kindly be made to engage the Advocate General, Government Pleader or any other officer as Government may consider proper in order to place the Government's case before the Court at the aforesaid time and place.

By order of the President,

Seal.

Registrar,
Industrial Court

No.

Office of the Industrial Court,

High Court, Bombay,

day of 19 .

To

Form No. 16.

(*Notice to Government Labour Officer for appearance.*)

IN THE INDUSTRIAL COURT, BOMBAY.

NOTICE.

WHEREAS the matters mentioned on the reverse will be taken up for hearing at

or at such time immediately thereafter according to the

convenience of the Court, on in

AND WHEREAS your presence is necessary, PLEASE TAKE NOTICE that you or your

deputy is required to attend the Court at the aforesaid time and place.

By order of the President,

Seal

Registrar,
Industrial Court.

No.

Office of the Industrial Court,

High Clourt, Bombay,

day of 19

To

The Government Labour Officer,

Form No. 17.

(*Commission.*)

IN THE INDUSTRIAL COURT, BOMBAY.

No. of 19 .

In the matter of

COMMISSION.

WHEREAS the Court was pleased to direct the issue of a Commission by an order made on for examination of witnesses and for inquiry and/or investigation of the matter mentioned in the Schedule overleaf, KNOW YOU that pursuant to the said order you are hereby appointed Commissioner for that purpose wherein you are authorised and empowered to command the attendance of the said witnesses and to cause such witnesses to be examined, cross-examined and re-examined upon oath or on solemn affirmation as the case may be and to record their evidence in writing in the presence of the parties or their counsel, advocates, attorneys, pleaders or representatives and to conduct inquiry and investigation at and you are further directed to send the complete record of the evidence, report of your inquiry and investigation under your hand and seal together with this commission to the undersigned not later than

Given under my hand and seal of the Court.

Bombay, dated this day of 19 .

By order of the President,

Seal.

Registrar,
Industrial Court.

No.
Office of the Industrial Court,
High Court, Bombay.

To

Form No. 18.

(*Order of Costs.*)

IN THE INDUSTRIAL COURT, BOMBAY.

Before

No. of 19 .

Industry.
Amount Rs.

The said Court doth hereby ORDER that the abovenamed shall pay to the abovenamed the sum of Rupees being cost in the above matter, as detailed on the reverse.

Given under the Seal of the Court.

This day of 19 .

(True copy)

Registrar,
Industrial Court.

(*Reverse.*)

Particulars.	Amount.
	Rs. a. p.
Total ..	

Form No. 19.

(*Order of Fine and/or Compensation.*)

IN THE INDUSTRIAL COURT, BOMBAY.

Before

No. of

The said Court doth hereby CONVICT Mr. of the offence of under Section of the Bombay Industrial Relations Act (No. XI of 1947), and ORDER him to pay a fine of Rs. and/or compensation amounting to Rs. and DIRECT that out of the amount recovered from him, Rs. shall be paid to

Given under the Seal of the Court.

The day of 19 .

By order of the Court,

(True copy.)

Registrar,
Industrial Court.

Form No. 20.

(*Warrant for recovery of fine and compensation imposed by the Industrial Court.*)

IN THE INDUSTRIAL COURT, BOMBAY.

WHEREAS by an order (copy enclosed) made on the

day of 19 . . (Name) in

No. of 19 was convicted by this Court of the

offence of under section of the

and was ordered to pay a fine of Rs.

and/or compensation amounting to Rs. to be paid to

you are hereby directed under section 110 of the Bombay Industrial Relations Act to recover the said amount of fine and/or compensation from the said person as arrears of land revenue and to pay Rs.

to

and to certify to this Court that the said order has been executed according to law.

Given under my hand and Seal of the Court.

This day of 19 .

By order of the President.

Seal.

Registrar,
Industrial Court.

No.

Office of the Industrial Court,
High Court, Bombay.

day of 19 .

To

Form No. 21.

(*Warrant of commitment on a sentence of imprisonment passed or confirmed by the Industrial Court.*)

IN THE INDUSTRIAL COURT, BOMBAY.

WHEREAS on the day of 19 (Name) No. of 19 was convicted by Court of the offence of under section of the and was sentenced to

AND WHEREAS the said sentence is confirmed/modified by this Court, this is to authorise and require you to receive the said person into you custody and put him in jail together with this warrant and thereafter carry the aforesaid (remaining) sentence into execution according to law.

Given under my hand and Seal of the Court.

This day of 19 .

By order of the President.

Seal.

Registrar,
Industrial Court.

No.
Office of the Industrial Court,
High Court, Bombay.
day of 19 .

To

Form No. 22.

(*Form of Affidavit.*)

IN THE INDUSTRIAL COURT, BOMBAY.

No. of 19 .

I (Name)
beg to state on oath/solemn affirmation as follows :—

(1)
(2)
(3)
(4)

Signature.

Identified by

Before me,

Registrar,
Industrial Court.

Form No. 23.

(*Summons to Witness.*)

IN THE INDUSTRIAL COURT, BOMBAY.

No. of

In the matter of

SUMMONS.

WHEREAS the above matter will be taken up for hearing at or at such time immediately thereafter according to the convenience of the Court, on in

AND WHEREAS your presence is necessary, you are hereby SUMMONED to appear in person before the said Court at the aforesaid time and place to give evidence, to answer all material questions and to produce all books, documents, etc. which may be in your possession or under your control and in any way relating to the matters in dispute, and to continue to remain present until you are discharged.

By order of the President,

Seal.

Registrar,
Industrial Court.

No.

Office of the Industrial Court,
High Court, Bombay.
day of 19 .

To

SCHEDULE II.

Tables of Fees, Charges, etc.

	Rs.	a.	p.
(1) Affidavit as provided in Schedule I to the Stamp Act ..	1	0	0
(2) Process fees for each witness summons	0	6	0
(3) Type copying and comparing charges of certified copies of documents (per folio of 100 words)	0	8	0
(4) Inspection and search of documents in the possession of Court (per day for each document)	0	12	0

N.B.—Fees for items 3 and 4 are payable in cash and in respect of other items, in court fee stamps.

APPENDIX B.

The Labour Courts (Practice and Procedure) Rules (B. G., Pt. IV-B, p. 645).

S. 85. Labour Courts (Practice and Procedure) Rules, 1947.

In exercise of the powers conferred under section 85 of the Bombay Industrial Relations Act (No. XI of 1947), the Industrial Court has framed the following rules for regulating the practice and procedure of Labour Courts :—

CHAPTER I.

General.

1. These rules may be called "The Labour Courts (Practice and Procedure) Rules, 1947", and shall come into force on the day the Bombay Industrial Relations Act (No. XI of 1947) comes into force by virtue of a notification issued by the State Government under section 2 (*2*) of the said Act.

2. (A) In these rules unless there is anything repugnant in the subject or context :

(1) "Act" means the Bombay Industrial Relations Act (No. XI of 1947).

(2) "Application" means any application made to the Court under the Act or these rules.

(3) "Complaint" means an allegation made in writing to a Judge with a view to his taking action under the Act that some person mentioned therein has committed an offence punishable under the Act, and includes the Report of a Labour Officer under section 82 of the Act.

(4) "Court" means the Labour Court as constituted under section 9 of the Act.

(5) "Judge" means a judge appointed to preside over a Labour Court as defined in section 3 (*21*) of the Act.

(6) "Matter" means any application, petition, reference, submission or criminal complaint filed in or made to the Labour Court under the provisions of the Act.

(7) "Order" means any order made by the Labour Court in any proceeding before it other than an award.

(8) "Party" means the applicant, petitioner, opponent, complainant or accused or an employer or employee concerned in any application, petition, submission, reference or criminal complaint.

(9) "Petition" means any petition made to the Court under the Act or these rules.

(10) "Statement of Claim" means a statement filed by or on behalf of a party on whose claim submission or reference arises.

(11) "Written Statement" means a statement filed by an opponent in reply to a statement of Claim or to an application or petition.

(B) Words and expressions not defined in these rules shall have the same meanings assigned to them under the Act.

CHAPTER II.

Sittings.

3. (*a*) The Court shall ordinarily sit on week days from 11 a.m. to 5 p.m. with a recess, subject to such alterations as the judge may direct on any particular day or days. On Sundays the Court shall sit from 11 a.m. to 2 p.m.

15. If the application or petition is not in order by reason of any formal defect it shall be returned by the judge for remedying the defect if any, within a specified time.

16. If the judge thinks that any application or petition may be fixed for preliminary hearing he shall cause notice in form E to be served on the applicant or petitioner directing him to appear before him at the time and place mentioned therein to show cause why the application or petition may not be summarily dismissed.

17. If any of the parties applies for determining certain matter on preliminary issues, the judge may proceed to determine such issues on issuing notice to the opposite party.

18. If the application or petition is not summarily dismissed the judge shall cause notice in form F to be given to the opponent directing him to file a written statement within a specified time.

19. As soon as any submission or reference is admitted to the file the judge shall give notices in forms G, H, I and J to the parties to file their statement of claim, or written statement as the case may be within the time stated in the notice.

20. The statement of claim and the written statement referred to in rule 19 shall be drawn up in forms C and D respectively.

20-A. As soon as the written statement is filed as required under these rules, and the matter is ready for hearing, a notice of hearing in Form JJ shall be issued to the parties concerned.

II. Special (Criminal) Jurisdiction.

21. The provisions of the Code of Criminal Procedure, 1898, regarding bail shall apply to all proceedings in respect of offences triable by the Court.

22. In all criminal proceedings before the Court the forms prescribed in the Code of Criminal Procedure shall be used in so far as they may be applicable.

CHAPTER VI.

Issue of Summonses, notices and processes.

23. When in any matter it appears necessary that Government should be represented and heard on any point arising therein, the judge shall give intimation of the matter to the State Government or the principal officer of Government in the local area as per Form K.

24. In any matter coming before the Court in its ordinary jurisdiction, where it appears, on application of any of the parties or otherwise, that the presence of the Government Labour Officer of the local area concerned is necessary, a notice in Form "L" may be given to him requiring him or his deputy to attend the Court at such time and place as mentioned therein.

25. Every summons, notice, warrant or other process and every decision, order, award, certified copy of any document, shall be signed by the judge with the day and year of signing and shall be sealed with the official seal of the Court.

26. The service of every summons, notice, warrant, other mandatory process, order or award shall be effected either by hand delivery or through Registered Post as may be expedient or as provided in order V of Civil Procedure Code or in Criminal Procedure Code as the case may be.

CHAPTER VII.

Procedure in the Court.

Ordinary Jurisdiction.

27. The Court shall call upon the parties in such order as it may think fit to state their case.

28. Each witness shall give his evidence on oath or solemn affirmation as the case may be and shall give the following particulars, namely (1) his name, (2) age, (3) occupation and (4) place of residence and (5) religion, if any.

29. The Court may accept, admit or call for any evidence at any stage and in any manner it thinks fit.

30. Where a party desires to rely upon any statistical statement the party shall supply copies as follows, namely, one copy to the Court and additional copies to each of the assessors if so required by the Court and one copy to each representative for the other side.

31. Where statistical statements are to be filed as exhibits on each such statement shall be put the following particulars, namely, (1) the source from which the figures have been compiled, and (2) the name of the party submitting the exhibit.

CHAPTER VIII.

Miscellaneous.

32. One party on either side in any matter, Registrar or unions, or any other authority wherever concerned, shall be supplied by the Judge with a certified copy of the decision, order or award made therein by him free of charge and any additional copy required by the parties shall be supplied at the cost prescribed for certified copies of documents in Schedule II.

33. Where any fact is to be proved by affidavit it shall be drawn in Form M, shall bear the stamp prescribed in Schedule II and shall be sworn or affirmed in the presence of the judge or the Court clerk who may be authorised in writing by the judge in this behalf.

34. The Court may correct in any decision, award or order any clerical mistake or error arising from an accidental slip or omission.

35. The forms set out in Schedule I to these rules or forms substantially to the like effect with such variations as the circumstances of each case may require shall be used for all cases where forms are appropriate.

36. Nothing in these rules shall be deemed to limit or otherwise affect the power to make such order as may be necessary for the ends of justice or to prevent the abuse of process of the Court.

37. The judge or any other person authorised in writing by him in this behalf may at any time during the pendency of the dispute enter any building, factory, workshop, or other places or premises whatsoever and inspect the same or any work, machinery, appliances, or articles therein or interrogate any person therein in respect of anything situated therein or any matter relating to the subject matter of the dispute.

CHAPTER IX.

Registers and Returns.

38. The judge shall send every year before 31st January a return in Form O to the Registrar, Industrial Court, showing the number of cases filed, withdrawn, decided, pending, etc.

39. A register in Form P shall be maintained for entering the particulars of exhibits returned.

40. The applications or petitions, submissions, references and complaints in criminal matters shall be entered separately in registers as per Forms Q, R, S and T respectively.

41. The particulars of certified copies given to the parties shall be entered in a separate register as per Form U.

SCHEDULE I.

FORMS.

Form A.

(*Memorandum of Appearance.*)

IN THE LABOUR COURT AT

No. of

In the matter of

Address :

I/We have appointed Mr.
to appear for me/us in the above matter.

Dated this day of 19

(Signature).

Accepted.

(Signature).

Form B.

(*Application or Petition.*)

IN THE LABOUR COURT AT

$\frac{\text{Application}}{\text{Petition}}$ No. of 19 .

(1) A ..
(2) B ..
(3) C ..
} Applicant/s. / Petitioner/s.

Address :

versus

(1) X
(2) Y
(3) Z
.. .. .. } Opponent/s.

Address :

Application/petition under section
of the Bombay Industrial Relations Act,
XI of 1947, read with section

In the matter of

The applicant/s / petitioner/s abovenamed beg/s respectfully to submit as follows :—

(1) That
(2) That
(3) That

The applicant/s / petitioner/s therefore pray/s that the Court may be pleased to decide

(1) That
(2) That
(3) That

The applicant/s / petitioner/s beg/s to amend or add to or make alterations in the application/petition if and when necessary.

Date :

Signature or thumb impression of
applicant/s / petitioner/s

The applicant/s / petitioner/s does/do solemnly declare that what is stated above is true to the best of his/their knowledge, belief and information. This verification is signed at on day of 19 .

Signature or thumb impression of
applicant/s / petitioner/s

Drafted by

Place

Form C.

(*Statement of Claim.*)

IN THE LABOUR COURT AT

Reference/Submission No. of 19 .

BETWEEN

(*a*) (*b*) (*c*) ... First Party.

Address :

AND

(*x*) (*y*) (*z*) ... Second Party.

Address :

Reference/submission under section
of the Bombay Industrial Relations Act,
No. XI of 1947.

In the matter of

The abovenamed beg/s respectfully to submit the statement of claim as follows :—

(1) That
(2) That
(3) That

The beg/s to amend, add to or make alterations in the statement of claim if and when necessary.

Date :

Signature or thumb impression.

The does/do solemnly declare that what is stated above is true to the best of his/their knowledge, belief and information. This verification is signed at on day of 19 .

Signature or thumb impression.

Drafted by

Place

Form D.

(*Written Statement.*)

IN THE LABOUR COURT AT

Application / Petition / Submission / Reference No. of 19 .

(1) A
(2) B
(3) C
.. .. .. } Applicant/s / Petitioner/s / First Party.

Address :

versus

(1) X
(2) Y
(3) Z
.. .. .. } Opponent/s / Second Party.

Address :

In the matter of

The $\frac{\text{opponent/s}}{\text{second party}}$ abovenamed beg/s respectfully to submit his/their written statement as under :—

(1) That
(2) That
(3) That

The $\frac{\text{opponent/s}}{\text{second party}}$ beg/s to amend or add to or make alterations in the written statement if and when necessary.

Date :

Signature or thumb impression of opponent/s second party.

The opponent/s second party does/do solemnly declare that what is stated above is true to the best of his/their knowledge, belief and information. This verification is signed at on day of 19 .

Signature or thumb impression of opponent/s second party.

Drafted by

Place

Form E.

(*Notice of Preliminary Hearing.*)

IN THE LABOUR COURT AT

No. of 19 .

(Ordinary Jurisdiction.)

In the matter of

NOTICE.

PLEASE TAKE NOTICE that the above matter will be taken up for preliminary hearing before me at on in You are hereby required to appear in person or through any other person or by a duly authorised counsel, advocate, attorney, pleader or a representative as the case may be at the aforesaid time and place and to show cause, if any, why the above matter should not be summarily dismissed.

Seal.

Judge,

Labour Court.

No.
Office of the Labour Court,
day of 19
To .

Form F.

(*Notice to file written statement in application or petition.*)

IN THE LABOUR COURT AT

Application/Petition No. of 19 .

(Ordinary Jurisdiction.)

(1) A
(2) B
(3) C } Applicant (s)/Petitioner (s)

Address :

versus

(1) X
(2) Y
(3) Z } Opponent (s).

Address :

Application/Petition under section of the Bombay Industrial Relations Act, No. XI of 1947, read with section .

In the matter of

NOTICE.

WHEREAS abovenamed has filed in this Court, a copy whereof is enclosed herewith, NOTICE is hereby given to you that if you so desire, two copies of your written statement may be filed in this office on or before and that a copy thereof may be supplied to the abovenamed and to inform the undersigned that this has been done.

2. The time and the place of hearing will be announced later.

Seal.

Judge,
Labour Court.

No.

Office of the Labour Court,

day of 19 .

To

Form G.

(*Notice to file statement of claim in a Submission.*)

IN THE LABOUR COURT AT

Submission No. of 19 .

(Ordinary Jurisdiction.)

BETWEEN

AND

In the matter of

NOTICE.

WHEREAS the parties abovenamed have submitted the above dispute to the arbitration of this Court, PLEASE TAKE NOTICE that you are hereby required to file a statement of claim (in two copies) in connection with the said dispute on or before the
and that a copy of the same may be handed over by you simultaneously to the other side and to inform the undersigned that this has been done.

2. The time and the place of hearing will be announced later.

Seal.

Judge,
Labour Court.

No.

Office of the Labour Court,

day of 19 .

To

Form H.

(*Notice to file written statement in a Submission.*)

IN THE LABOUR COURT AT

Submission No. of 19 .

(Ordinary Jurisdiction.)

BETWEEN

AND

In the matter of

NOTICE.

WHEREAS the parties abovenamed have submitted the above dispute to the arbitration of this Court, AND WHEREAS has/have been directed to file a statement of claim in this office on or before a copy whereof will be handed over to you simultaneously by him/them on or before that day, PLEASE TAKE NOTICE that you are hereby required to file in this office on or before the two copies of the written statement in reply to the statement of claim that you may receive and that a copy of the same may be handed over by you simultaneously to the other side and to inform the undersigned that this has been done.

2. The time and the place of hearing will be announced later.

Seal.

Judge,
Labour Court.

No.

Office of the Labour Court,

day of 19 .

To

Form I.

(*Notice to file statement of claim in a Reference.*)

IN THE LABOUR COURT AT

Reference No. of 19 .

(Ordinary Jurisdiction.)

BETWEEN

AND

In the matter of

NOTICE.

WHEREAS by Government Notification, Political and Services Department, No. dated the the above matter has been referred to the arbitration of this Court, PLEASE TAKE NOTICE that you are hereby required to file a statement of claim (in two copies) in this office on or before in connection with the said dispute and that a copy of the same may be handed over by you simultaneously to the other side and to inform the undersigned that this has been done.

2. The time and the place of hearing will be announced later.

Seal.

Judge,
Labour Court.

No.

Office of the Labour Court,

day of 19 .

To

Form J.

(*Notice to file written statement in a Reference.*)

IN THE LABOUR COURT AT

Reference No. of 19 .

(Ordinary Jurisdiction.)

BETWEEN

AND

In the matter of

NOTICE.

WHEREAS by Government Notification, Political and Services Department, No. dated the the above matter has been referred to the arbitration of this Court, AND WHEREAS has/have been directed to file a statement of claim in this office on or before a copy whereof will be handed over to you simultaneously by him/them on or before that day, PLEASE TAKE NOTICE that you are hereby required to file in this office on or before the two copies of the written statement in reply to the statement of claim that you may receive and that a copy of the same may be handed over by you simultaneously to the other side and to inform the undersigned that this has been done.

2. The time and the place of hearing will be announced later.

Seal.

Judge,
Labour Court.

No.

Office of the Labour Court,

day of 19 .

To

Form JJ.

(*Notice of hearing.*)

IN THE LABOUR COURT AT

Ordinary Jurisdiction.

No. of 19 .

In the matter of

NOTICE.

WHEREAS the above matter has been admitted to the file, PLEASE TAKE NOTICE that the said matter will be taken up for hearing at or at such time immediately thereafter according to the convenience of the Court on in

You are hereby required to appear in person or by a duly authorised person entitled to appear on your behalf at the aforesaid time and place and to continue to remain present until the said matter has been finally disposed of and to produce before the said Court on those days all books, documents, etc., which may be in your possession or under your control and in any way relating to the matters in dispute and witnesses, if any.

Seal.

Judge,
Labour Court.

No. of 19 .

Office of the Labour Court,

day of 19 .

Form K.

(*Letter of Intimation to Government.*)

IN THE LABOUR COURT AT

No. of 19 .

In the matter of

No.

OFFICE OF THE LABOUR COURT.

From

X Y Z,
Judge,
Labour Court ;

To

Sir,

I have the honour to inform you that the above matter will be taken up for hearing before me at on in . It is necessary that Government should be represented and heard on points arising therein. I am, therefore, to request you that arrangement may kindly be made to engage a lawyer or any other officer as you may consider proper in order to place the Government's case before the Court at the aforesaid time and place.

Your obedient servant,

Judge,
Labour Court.

Form L.

(*Letter to the Government Labour Officer for appearance.*)

IN THE LABOUR COURT AT

(Ordinary Jurisdiction.)

No.

OFFICE OF THE LABOUR COURT,

From

X Y Z,
Judge,
Labour Court ;

To

The Government Labour Officer.

Sir,

I have the honour to inform you that the matters mentioned on the reverse will be taken up for hearing before me at on

in , which please note.
As the presence of the Labour Officer is necessary, I am to request you to make it convenient to atend the sittings of the Court or to send your deputy at the aforesaid time and place.

Your obedient servant,

Judge,
Labour Court.

Form M.

(*Form of Affidavit.*)

IN THE LABOUR COURT AT

No. of 19 .

I (Name)

beg to state on oath/solemn affirmation as follows :—

(1) That

(2) That

(3) That

(4) That

(Signature)

Identified by

Before me,

Judge,
Labour Court.

Form N.

(*Summons to Witness.*)

IN THE LABOUR COURT AT

No. of 19 .

In the matter of

SUMMONS.

WHEREAS the above matter will be taken up for hearing at on in AND WHEREAS your presence is necessary, you are hereby SUMMONED to appear in person before me at the aforesaid time and place and to give evidence, to answer all material questions and to produce all books, documents, etc., which may be in your possession or under your control and in any way relating to the matters in dispute, and to continue to remain present until you are discharged.

Seal.

Judge,
Labour Court.

No.

Office of the Labour Court,

day of 19 .

To

Form O.

Annual Return showing the position of cases as on 31st December 19 .

IN THE LABOUR COURT AT

Nature of Case.	Centre.		Remarks.
	Sub-Areas.	Total.	
Criminal Complaint.			
Filed by individual persons ...	...		
Filed by Government Labour Officer ...	...		
No. of cases filed in 19 ...	...		
No. of cases pending from 19 ...	...		
Total ...			
No. of cases decided in 19 ...	...		
No. of cases withdrawn in 19 ...	...		
No. of cases pending in 19 ...	...		
Application for Illegal Changes.			
Filed by employees ...	...		
Filed by Trade Unions ...	...		
Filed by Government Labour Officers ...	...		
No. of cases filed in 19 ...	...		
No. of cases pending from 19 ...	...		
Total ...			
No. of cases decided in 19 ...	...		
No. of cases withdrawn in 19 ...	..		
No. of cases pending in 19 ...	...		
Application for Illegal Strike.			
Filed by Employers' Association ...	...		
Filed by individual employers ...	...		
No. of cases filed in 19 ...	...		
No. of cases pending from 19 ...	...		
Total ...			
No. of cases decided in 19 ...	...		
No. of cases withdrawn in 19 ...	...		
No. of cases pending in 19 ...	...		

Nature of Case.	Centre.		Remarks.
	Sub-Areas.	Total.	
Submissions.			
Filed by individual employers', employees' Associations and Trade Unions in 19	...	...	
No. of cases pending from 19	...	...	
	Total ...		
No. of cases decided in 19	...	...	
No. of cases withdrawn in 19	...	...	
No. of cases pending in 19	...	...	
References.			
From the Provincial Government under Section		...	
No. of cases decided in 19	...	...	
No. of cases pending in 19	...	...	
Miscellaneous Applications or Petitions.			
Filed by Employers' Association	...	...	
Filed by individual employers	...	...	
Filed by individual employees	...	...	
Filed by Trade Unions	...	...	
Filed by Government Labour Officers	...	...	
	Total ...		
No. of cases decided in 19	...	...	
No. of cases withdrawn in 19	...	...	
No. of cases pending in 19	...	...	
	Grand Total ...		
No. of cases filed in 19	...	...	
No. of cases pending from 19	...	...	
	Total ...		
No. of cases decided in 19	...	...	
No. of cases withdrawn in 19	...	...	
No. of cases pending in 19	...	...	

Form P.

THE LABOUR COURT AT

Register of Exhibits returned.

Register No.	Exhibit No.	Matter No.	Put in by	Date when tendered.

(*Contd. below*)

Returned on	Returned to	Acknowledgement received on.	Initials.	Remarks.

Form Q.

THE LABOUR COURT AT

Register of Applications or Petitions.

Date of Application / Petitions	Application or Petition No.	Applicant / Petitioner	Opponent.	Subject matter.	Industry.	Date of hearing.	Adjournment.

(*Contd. below*)

Date of final order.	Final Order in brief.	Witnesses examined on behalf of the		Exhibits tendered by the		Remarks.
		Applicant / Petitioner	Opponent / Petitioner	Applicant.	Opponent.	

Form R.

THE LABOUR COURT AT

Register of Submissions.

Date of filing.	Submission No.	Parties to Submission.	Industry.	Terms of Reference.	Date of hearing.	Adjournments.

(Contd. below)

Date of Award.	Award in brief.	Witnesses examined.		Exhibits tendered.		Remarks.
		For first party.	For second party.	By first party.	By second party.	

Form S.

THE LABOUR COURT AT

Register of References.

Date of Receipt.	Reference No.	Government Notification No. and date.	Parties to Reference.	Terms of Reference.	Date of hearing.	Adjournments.

(Contd. below)

Date of award.	Award in brief.	Witnesses examined.		Exhibits tendered.		Remarks.
		For first party.	For second party.	By first party.	By second party.	

Form T.

THE LABOUR COURT AT

Register of Criminal Complaints.

Case No.	Date of complaint.	Complainant.	Accused.	Charge.	Dates of proceedings and final order.	Order in brief.

(Contd. below)

Names of witnesses.		List of exhibits.	Execution of order.	Remarks.
Of Complainant.	Of accused.			

Form U.

THE LABOUR COURT AT

Register for supply of Certified Copies.

Serial No.	Date of receipt of application.	Name.	Particulars of certified copy asked for.	Copy delivered or posted on.	No. of folios.	Copying charges
						Rs. a. p.

(Contd. below)

Postage	Total amount	Amount received on	Receipt No.	Date of payment in Treasury or Reserve Bank.	Initials.	Remarks.
Rs. a. p.	Rs. a. p.					

SCHEDULE II.

Table of Fees, Charges, etc.

	Rs.	a.	p.
(1) Affidavit	0	8	0
(2) Process fee for each witness summons	0	6	0
(3) Type copying and comparing charges of certified copies of documents (per folio of 100 words)	0	6	9
(4) Inspection and Search of documents in the possession of Court (per day for each document)	0	12	0

N.B.—Fees for items 3 and 4 are payable in cash and in respect of other items in court fee stamps.

THE BOMBAY HINDU DIVORCE ACT, 1947 (BOM. XXII OF 1947).

G. N., H. D., No. 709/5-II, dated 7th January 1949 (B. G., Pt. IV-B, p. 24).

Amended by G. N., H. D., No. 709/5-II, dated 29th October 1949.

S. 16 Bombay Hindu Divorce Rules, 1948.

In exercise of the powers conferred by section 16 of the Bombay Hindu Divorce Act, 1947 (Bom. XXII of 1947), the Government of Bombay is pleased to make the following rules, namely :—

1. (1) These rules may be called the Bombay Hindu Divorce Rules, 1948.

(2) They shall come into force on the 7th day of January 1949.

2. In addition to the particulars required to be given under rule 1 of Order VII of the First Schedule to the Code of Civil Procedure, 1908, every plaint presented under the Bombay Hindu Divorce Act, 1947, shall contain the following particulars :—

(*a*) the place and date of the marriage ;

(*b*) the name, status and domicile (whether in the State of Bombay or elsewhere) of the wife before marriage ;

(*c*) the name of the husband and his occupation, status and domicile (whether in the State of Bombay or elsewhere) at the time of the marriage ;

(*d*) the principal permanent addresses where the parties cohabited, including the address where they last resided together ; and

(*e*) whether there is any living issue of the marriage, and if so, the names and dates of birth or ages of such issue.

3. (1) In every plaint presented by a husband for divorce or judicial separation, on the ground that his wife is a concubine of any other man, the plaintiff shall state the name, occupation and place of residence of such man, so far as they can be ascertained.

(2) In every plaint presented by a wife for divorce or judicial separation, on the ground that her husband has any other woman as a concubine, the plaintiff shall state the name, occupation and place of residence of such woman, so far as they can be ascertained.

4. Where a husband or a wife is charged in the plaint with having any other named woman as a concubine or being a concubine of any other named man, as the case may be, a certified copy of the plaint containing such charge shall, unless the Court for good cause shown otherwise directs, be served upon the named person.

5. Where the written statement of the defendant alleges that the plaintiff is a concubine of any other named man or has any other named woman as a concubine, a certified copy thereof shall, unless the Court for good cause shown otherwise directs, be served on the person who is alleged to have the plaintiff as his concubine or who is alleged to be the concubine of the plaintiff, as the case may be.

6. The person on whom a certified copy of the pleading has been served under rule 4 or 5 may file in the Court an answer to the charge.

THE BOMBAY AGRICULTURAL DEBTORS RELIEF ACT, 1947 (BOM. XXVIII OF 1947).

G. N., R. D., No. 4460/45, dated 23rd June 1947 (B. G., Pt. IV-B, p. 368). **S. 47 (2)**

In exercise of the powers conferred by sub-section (*2*) of section 47 of the Bombay Agricultural Debtors Relief Act, 1947 (Bombay XXVIII of 1947), the Government of Bombay is pleased to notify 4 acres of betelnut and spice garden lands, or 6 acres of irrigated, rice or cocoanut lands or 18 acres of dry land or any land assessed at Rs. 30 whichever is greater in area, as the minimum necessary for the maintenance of the debtor and his dependents.

G. N., R. D., No. 4684/45, dated 19th July 1947 (B. G., Pt. IV-B, p. 461). **S. 55. Bombay Agricultural Debtors Relief Rules, 1947.**

Amended by G. N., R. D., No. 4684/45, dated 26th April 1949.
Amended by G. N., D. D., No. 701, dated 1st April 1950.

In exercise of the powers conferred by section 55 of the Bombay Agricultural Debtors Relief Act, 1947 (Bom. XXVIII of 1947), and in supersession of the Bombay Agricultural Debtors Relief Rules, 1941, the Government of Bombay is pleased to make the following rules :—

1. *Short title.*—These rules may be called the Bombay Agricultural Debtors Relief Rules, 1947.

2. *Definitions.*—In these rules, unless there is anything repugnant in the subject or context,—

(*i*) " Act " means the Bombay Agricultural Debtors Relief Act, 1947 ;

(*ii*) " Code " means the Code of Civil Procedure, 1908 ;

(*iii*) " Form " means a form appended to these rules ;

(*iv*) " Government " means the Government of Bombay ;

(*v*) " Section " means a section of the Act ;

(*vi*) Words and expressions used in the Act and not defined in these rules shall have the meanings assigned to them in the Act.

2-A. *Financing of crops for other purposes.*—The other purposes, for which loans may be advanced for the " financing of crops " within the meaning of clause (*6*) of section 2 shall be :—

(*i*) Labour charges ;
(*ii*) Transport charges ;
(*iii*) Purchase of fodder ;
(*iv*) Intercultivating ;
(*v*) Threshing ;
(*vi*) Hire or purchase of plough cattle and agricultural implements
(*vii*) Maintenance of the debtor and his dependants and of his cattle and repairs to agricultural implements ;
(*viii*) Current expenses of running agricultural machinery, e.g., pumps or engines, including fuel charges ; and

such other purpose in respect of any particular area in any particular year as may have been certified by Government to be necessary for the purpose of raising or harvesting any crop in that year.

3. *Seasonal finance.*—The purposes, advancing of loans for which shall be "seasonal finance" within the meaning of clause (13) of section 2, shall be :—

(*i*) Raising of crops during the ploughing season or later, ploughing, sowing, harrowing, weeding, harvesting, purchase of seeds and manure.

(*ii*) Labour charges.

(*iii*) Transport charges.

(*iv*) Purchase of fodder.

(*v*) Intercultivating.

(*vi*) Threshing.

(*vii*) Hire or purchase of plough cattle and agricultural implements.

(*viii*) Maintenance of the debtor and his dependants and of his cattle and repairs to agriculrual implements.

(*ix*) Current expenses of running agricultural machinery, e.g., pumps or engines, including fuel charges.

4. *Applications under sub-section (1) of section 4 and sub-section (1) of section 8.*—Applications under sub-section (*1*) of section 4 shall be in Forms Nos. 1 and 2 and applications under sub-section (*1*) of section 8 shall be in Form No. 3. They shall be presented to the Court during office hours by the applicants personally or shall be sent by registered post addressed to the Court and shall be received by the Civil Judge or by such person as may be authorised by him to receive them.

5. *Manner of publication of general notice under section 14.*—The general notice under clause (*b*) of section 14 shall be published by affixing copies of it at the offices of the Court concerned and of the Mamlatdars or Mahalkaris of the talukas or petas concerned. Such notice shall state that the list of debtors, who have made applications for adjustment of debts or against whom applications have been made, will be available for inspection at all reasonable times in the Court.

6. *Form of Statement under section 14.*—The statement which a debtor or creditor is required to submit under section 14 shall be in Form No. 4 or 5 as the case may be.

7. *Manner of determining the value of debtor's property under sub-section (1) of section 29.*—(*i*) For the purposes of sub-section (*1*) of section 29, the value of the debtor's moveable and immoveable property shall be determined by the Court in the manner specified in this rule.

(*ii*) *Immoveable property.*—The Court shall determine the value of any immoveable property by taking into consideration—

(*a*) the *bona fide* sales and leases of the property in question during the preceding twelve years ;

(*b*) the *bona fide* sales and leases of similar properties in the neighbourhood during the preceding twelve years ; and

(*c*) the valuation of the property in question made by the Land Valuation Officers appointed by Government in this behalf.

(*iii*) *Moveable property.*—The Court shall determine the value of moveable property by taking into consideration the valuation of the property in question made by the Land Valuation Officers appointed by Government in this behalf and also by questioning the parties concerned and by making such other inquiries as it may think fit,

(*iv*) The Land Valuation Officers appointed by Government may be appointed by the Court as Commissioners under Order XXVI in Schedule I to the Code of Civil Procedure, 1908, for the purpose of making an inquiry for determination of the value of debtor's moveable and immovable property.

8. *Manner of determining the market value of debtors' property under sub-section (4) of section 29.*—For the purposes of sub-section (*4*) of section 29, the market value of the debtor's lands, which under any law for the time being in force, are not transferable or alienable except with the previous sanction of the Collector or the State Government, shall be determined by the Court by taking into consideration—

(*a*) the *bona fide* sales and leases of the lands in question during the preceding 12 years, if any, and

(*b*) the *bona fide* sales and leases of similar lands in the neighbourhood during the preceding 12 years ;

and after ascertaining the valuation of the lands in question from the Mamlatdar of the taluka or the Mahalkari of the peta concerned.

9. *Forms of award.*—(*i*) The award under section 32 shall be in Form No. 6 and the award under sub-section (*2*) of section 33 shall be in Form No. 7.

(*ii*) The Court shall send a copy of the award passed under sub-section (*2*) of section 33 to the Primary Land Mortgage Bank concerned or the Bombay Provincial Co-operative Land Mortgage Bank, Ltd. as the case may be.

10. *Application under clause (i), sub-section (3) of section 38.*—Application under clause (*i*) of sub-section (*3*) of section 38 shall be in Form No. 8.

11. *Procedure when a debtor's property is ordered to be sold under section 41 or sub-section (2) of section 47.*—(*i*) Every sale of property, whether moveable or immoveable, under section 41 or sub-section (*2*) of section 47 shall be held by an officer of the Court in accordance with the procedure laid down for the sale of such property under the Code.

(*ii*) A certificate in Form No. 9 shall be issued to the purchaser of property by the officer conducting the sale under this rule.

12. *Recovery of Court-fees.*—The Court-fees payable under sub-section (*1*) of section 44 shall be recovered as arrears of land revenue.

12-A. *Form of Register of Debt Adjustment Awards and Index.*—The Register of Debt Adjustment Awards in the form of a file book with numbered butts in Form 9A and an Index relating thereto in Forms 9B and 9C shall be kept in all registration offices.

12-B. Particulars to be included in the memorandum to be sent by the Court to the Sub-Registrar or Registrar, as the case may be, under section 46B shall be in Form 9D and shall be endorsed on the certified copy of the award sent for registration under the said section 46B.

13. *Procedure in Code to be followed generally.*—In respect of any matter for which no provision is made in the Act or these rules, the procedure laid down in the Code shall, so far as may be, be followed by the Court in the proceedings before it.

14. *Conditions subject to which authorised persons may advance loans.*—The authority under section 54 to any person to advance loans to debtors who are parties to any proceedings under the Act or in respect of whose debts an adjustment has been made under the Act (hereinafter referred to in this rule as the authorised person), shall be in Form No. 10. It shall not be granted except on the following conditions :—

(*i*) *Purposes for which advances may be made and maximum limits of such advances.*—The authorised person shall not advance loans to any debtor except for the purpose of seasonal finance not exceeding the maximum limits which the Collector has fixed in this behalf under rule 15.

The authorised person shall not knowingly advance any loan to any debtor who had previously taken a loan from another authorised person unless such previous loan has been fully paid or unless he (the authorised person) agrees to discharge the liability of the debtor in respect of such previous loan.

(*ii*) *Authorised person not to withhold permission for sale of crops or produce.*—The authorised person shall not unreasonably withhold permission required by a debtor under sub-section (*1*) of section 53 for sale of the standing crops or the produce of his land and if the authorised person himself buys the crops or produce he shall pay the debtor the price thereof at the market rate.

(*iii*) *Duty of authorised person to maintain and furnish accounts.*—(*a*) The authorised person shall keep regularly in Form No. 11 a separate account of each loan advanced to a debtor :

Provided that where the loans to any debtor are advanced on a current account, the authorised person may keep one account of all transactions relating to such loans.

Explanation.—For the purposes of this clause the term "current account" includes, in the case of banks, accounts relating to overdrafts, cash credits and pro-note accounts, which are maintained in the form of current accounts.

(*b*) The authorised person shall, within one month after the expiry of every year supply every debtor a full and correct statement of accounts signed by him or his agent. Such statement of accounts shall show all transactions entered into during the year and the balance oustanding on account of each loan on such date as Government may prescribe either generally or for a particular area and shall contain particulars as in Form No. 12 :

Provided that where the loans are advanced on a current account, it shall be sufficient to furnish particulars of the balance due on the whole of such account on the prescribed date. In the case of banks, the requirements of this clause shall be deemed to have been complied with if a full statement of accounts has been supplied to the debtor by means of a pass-book or otherwise from time to time throughout the year and intimation is given within one month after the expiry of the year of the amount of the balance remaining due on the prescribed date.

(*c*) The statement of accounts shall be furnished to the debtor by registered post and an acknowledgment obtained thereof at the cost of the authorised person.

(*iv*) *Rate and calculation of interest.*—(*a*) The authorised person shall not charge or recover interest at a rate higher than the rate notified by Government under rule 16.

(*b*) If any repayment is made in respect of a loan, interest on such loan shall be calculated up to the date of such repayment ; and if the loan or any part of it is outstanding, interest shall thereafter be calculated only on the balance of the principal still outstanding.

(*v*) *Inspection of accounts to be allowed.*—The authorised person, unless specially exempted by Government, shall allow such officer as may be appointed in this behalf by Government to inspect the account maintained by him.

(*vi*) *Penalty for non-compliance with conditions mentioned in this rule.*—Government may in its discretion cancel the authority granted by it for breach of any of the foregoing conditions or for any other reason.

15. *Collector to fix maximum limits up to which advance may be made.*—The Collector shall, by notification in the *Official Gazette*, fix maximum limits up to which persons authorised under section 54 may advance loans to debtors, who are parties to any proceedings under the Act or in respect of whose debts an adjustment has been made under the Act for seasonal finance once a year. Such limits shall come

into force from the 1st day of the month next to that in which the notification is published by the Collector and shall remain in force till the end of the month in which a fresh notification is published by the Collector in the next year. Such limits may be fixed separately for different crops and for different areas, having regard to the seasons and nature and productivity of crops.

16. *Government to fix maximum rates of interest.*—Government shall, from time to time, by notification in the *Official Gazette*, fix a rate of interest not exceeding six per cent. per annum, at which loans for seasonal finance may be advanced by persons authorised under section 54.

FORM No. 1.

(*See* Rule 4.)

To

The Court of the Civil Judge, $\frac{\text{Senior}}{\text{Junior}}$ Division,.....

Under section 4 (*1*) of the Bombay Agricultural Debtors Relief Act, 1947, I ..... son of ....., resident of ..... taluka, age ..... and doing business as ..... hereby apply for the adjustment of my debts under the said Act.

2. The amount and particulars of all debts due from me (including those mentioned in section 3) are as follows :—

1	2	3			
		Amount of debt.			
Serial No. of debt.	Full name, residence and full address of the creditor.	Principal.	Interest.	Total claimed by the creditor.	Amount, if any, admitted by the debtor.

4	5			6
	Particulars of debts for which the debtor is liable as surety, joint surety or joint debtor.			
*History of each debt with particulars of the original principal and rate of interest chargeable.	Amount of debt.	Nature of liability.	Full names and addresses of the debtors, joint sureties or joint debtors.	Remarks.

3. The particulars of my property including claims due to me are as follows :—

(*a*) Immoveable property (including property situate outside the State of Bombay).

1	2			3
Specification of the property with boundaries where necessary.	Name of the Village with Survey Nos.			Nature of tenure.
	Survey Nos.	Area in acres.	Government assessment.	
Lands ...				
Houses ...				

4	5	6	7	8
Annual income derived.	Market value.	Details of any attachment, mortgage, lien or charge subsisting thereon.	Full names and addresses of the co-sharers of the debtor, if any.	Remarks.

(*b*) Moveable property (including cash).

1	2	3	4	5	6
Serial No.	Description.	Estimated value.	Places where it may be found.	Details of any pledge, charge or lien thereon.	Remarks.

(*c*) Claims due.

1	2		3	4	5
Full name and Address of the person from whom the claim is due.	Amount due		Particulars of the claims including date of commencement, rate of interest, whether secured and if so, how, etc.	Nature of the documents evidencing the claim and in whose possession.	Remarks.
	Principal.	Interest.			

4. Particulars of property of the nature mentioned in paragraph 3 transferred or encumbered are as follows :—

1	2	3	4	5
Description of property.	Nature of transfer or encumbrance.	To whom transferred or mortgaged etc. (Full name and address of such person.)	Date of transfer or encumbrance.	Remarks.

5. I hereby declare that all debts which are due, or which to my knowledge any person claims to be due from me and all my properties have been included in the above statements.

Dated the 19 . Signature of the Applicant.

Verified that the contents of paragraphs of the application, are true upon the personal knowledge of, and those in paragraphs upon information received and believed to be true by the undersigned.

Dated the 19 . Signature of the Applicant.

**Note.*—If the principal of any of the debts shown in column 3 of the statement in paragraph 2 includes any arrears of interest which have been added when a bond has been renewed or any additional loan has been taken, the following information (so far as it is known to the debtor) should be given separately with references in the margin, to the serial numbers of the debts in column 3 :—

The date when the debt was first incurred, the amount of the original principal, the approximate dates and the conditions on which the bond was renewed or the additional loan taken, the rate of interest stipulated in each bond, the amount paid from time to time and any other facts.

FORM No. 2.

(*See* Rule 4.)

To

The Court of the Civil Judge, $\frac{\text{Senior}}{\text{Junior}}$ Division, ...

Under section 4 (*1*) of the Bombay Agricultural Debtors Relief Act, 1947,

I son of , resident

of , taluka , hereby apply for the

adjustment of my claims against , who is my debtor.

2. The particulars of my claims are as follows :—

1	2		3	4	5	6
Name and full address of the debtor.	Amount of debt claimed.		Whether secured and if so, how.	*History of each debt, with particulars of the original principal and rate of interest charged.	Names and addresses of other creditors, so far as they are known to the applicant.	Remarks.
	Principal.	Interest.				

3. The particulars of the debtor's property including the property situate outside the State of Bombay, so far as they are known to me are as follows :—

(*a*) Immovable property :—

1	2	3	4	5	6
Description.	Area or extent of share.	Assessment.	Value.	Particulars of any mortgage, lien or charge.	Remarks.

(*b*) Moveable property :—

1	2	3	4
Description.	Value.	Applicant's charge on the same, if any.	Remarks.

(*c*) Particulars of other income, if any,

Dated the 19 . Signature of the Applicant.

Verified that the contents of paragraph are true upon the personal knowledge of, and those in paragraph upon information received and believed to be true by the undersigned.

Dated the 19 . Signature of the applicant.

**Note.*—If the principal of any of the debts shown in column 2 of the statement in paragraph 2 includes any arrears of interest which have been added when a bond has been renewed or any additional loan has been taken, the following information (so far as it is known to the creditor) should be given separately with reference in the margin to the debts in column 2 :—

The date when the debt was first incurred, the amount of the original principal, the approximate dates and the conditions on which the bond was renewed or the additional loan taken, the rate of interest stipulated in each bond, the amounts paid from time to time and any other facts.

FORM No. 3.

(*See* Rule 4.)

Form of Application by a $\frac{\textit{debtor}}{\textit{creditor}}$ *under section 8 (1) for recording a settlement.*

To

The Court of the Civil Judge, $\frac{\text{Senior}}{\text{Junior}}$ Division,

Under section 8 (*1*) of the Bombay Agricultural Debtors Relief Act, 1947, I son of , resident of , taluka , hereby apply that the settlement in respect of my $\frac{\text{debts}}{\text{claims}}$ arrived at between the parties mentioned below on be recorded and certified under section 8 (*3*) of the said Act.

2. The particulars regarding the settlement are as follows :—

Parties to settlement.		Amount of debt claimed due by the creditors.	Amount for which the settlement is reached.	Instalments in which the amount is to be paid and priority among the creditors, if any.	Particulars of the property of the debtor relating to the settlement with details of any charge, lien or mortgage thereon.	Remarks.
Name and address of the debtor.	Names and addresses of the creditor.					
1		2	3	4	5	6

Dated the 19 . Signature of the applicant $\left(\frac{\text{Debtor}}{\text{Creditor}}\right)$.

Verified that the contents of paragraph 2, columns are true upon the personal knowledge of, and those of paragraph 2, columns upon information received and believed to be true by the undersigned.

Dated the 19 . Signature of the applicant $\left(\frac{\text{Debtor}}{\text{Creditor}}\right)$.

FORM No. 4.

(*See* Rule 6.)

Statement required to be submitted by a debtor under section 14 of the Bombay Agricultural Debtors Relief Act, 1947.

1. Amount and particulars to be submitted by a debtor under section *14* of the Bombay Agricultural Debtors Relief Act, *1947* (including those mentioned in section 3 of the Act).

1	2	3				4	5			6
		Amount of debt.				*History of each debt with particulars of the original principal and rate of interest chargeable.	Particulars of debts for which the debtor is liable as surety, joint surety or joint debtor.			
Serial No. of debt.	Full name, residence and full address of the creditor.	Principal.	Interest.	Total claimed by the creditor.	Amount if any, admitted by the creditor.		Amount of debt.	Nature of liability.	Full names and addresses of the debtors, joint sureties or joint debtors.	Remarks.

2. Particulars of debtor's property including claims due to the debtor.

(*a*) Immoveable property (including property situate outside the State of Bombay).

1	2			3	4	5	6	7	8
	Name of the Village with Survey Nos.								
Specification of the property with boundaries where necessary.	Survey Nos.	Area in acres.	Government assessment.	Nature of tenure.	Annual income derived.	Market value.	Details of any attachment, mortgage, lien or charge subsisting thereon.	Full names and addresses of the cosharer of the debtor, if any.	Remarks.

Lands ...

Houses ...

(*b*) Moveable property (including cash).

1	2	3	4	5	6
Serial No.	Description.	Estimated value.	Places where it may be found.	Details of any pledge, charge or lien thereon.	Remarks.

(*c*) Claims due.

1	2		3	4	5
Full name and address of the person from whom the claim is due.	Amount due		Particulars of the claims including date of commencement, rate of interest, whether secured and if so, how, etc.	Nature of the documents evidencing the claim and in whose possession.	Remarks.
	Principal.	Interest.			

Particulars of property of the nature mentioned in paragraph 2 transferred or encumbered.

1	2	3	4	5
Description of property.	Nature of transfer or encumbrance.	To whom transferred or mortgaged, etc. (Full name and address).	Date of transfer or encumbrance.	Remarks.

Signature of debtor.

**Note.*—If the principal of any of the debts shown in column 3 of the statement in paragraph 1 includes any arrears of interest which have been added when a bond has been renewed or any additional loan has been taken, the following information (so far as it is known to the debtor) should be given separately with references in the margin, to the serial numbers of the debts in column 3 :—

The date when the debt was first incurred, the amount of the original principal, the approximate dates and the conditions on which the bond was renewed or the additional loan taken, the rate of interest stipulated in each bond, the amount paid from time to time and any other facts.

FORM No. 5.

(*See* Rule 6.)

Statement required to be submitted by a creditor under section 14 of the Bombay Agricultural Debtors Relief Act, 1947.

1. Particulars of creditor's claims.

1	2		3	4	5	6
	Amount of debt claimed.					
Name and full address of the debtor.	Principal.	Interest.	Whether secured and if so, how.	*History of each debt, with particulars of the original principal and rate of interest charged.	Names and addresses of other creditors, so far as they are known to the applicant.	Remarks.

2. Particulars of debtor's property including property situate outside the State of Bombay so far as they are known to the creditor.

(*a*) Immoveable property :—

1	2	3	4	5	6
Description.	Area or extent of share.	Assessment.	Value.	Particulars of any mortgage, lien or charge.	Remarks.

(*b*) Moveable property :—

1	2	3	4
Description.	Value.	Applicant's charge on the same, if any.	Remarks.

(*c*) Particulars of other income, if any. Signature of the Creditor.

**Note.*—If the principal of any of the debts shown in column 2 of the statement in paragraph 1 includes any arrears of interest which have been added when a bond has been renewed or any additional loan has been taken, the following information (so far as it is known to the creditor) should be given separately with reference in the margin to the debts in column 2 :—

The date when the debt was first incurred, the amount of the original principal, the approximate dates and the conditions on which the bond was renewed or the additional loan taken, the rate of interest stipulated in each bond, the amounts paid from time to time and any other facts.

FORM No. 6.

[*See* Rule 9 (*i*).]

Award under section 32 of the Bombay Agricultural Debtors Relief Act, 1947.

Proceedings No. Year.

Order of the Court.

Whereas, on an application made under the Bombay Agricultural Debtors Relief Act, 1947, for the adjustment of debts of the debtor described in Schedule A, this Court has determined under the provisions of the said Act, the amounts payable to the creditors described in the said Schedule A.

2. It is hereby ordered under section 32 of the said Act as under :—

(1) The debtor shall pay to each creditor concerned the amount mentioned against his name in column 4 of Schedule A, in the manner laid down in column 7 thereof.

(2) The properties of the debtor mentioned in Schedule B and bearing serial Nos. are hereby charged for the payment of the creditors described in Schedule A (bearing serial Nos.)

(3) Properties bearing serial Nos. in Schedule B now in possession of the creditor shall be delivered to the debtor, subject to the conditions which are recorded at the end.

(4) Properties bearing serial Nos. in Schedule B shall be liable to be sold for the recovery of debts of creditors Nos. respectively in Schedule A. The conditions subject to which these shall be sold are recorded at the end.

(5) Simple interest at the rate mentioned in column 4 of Schedule A shall be allowed on the amount mentioned in that column; costs mentioned in column 5 and court-fees mentioned in column 6 of the said Schedule A shall be paid by the parties mentioned in those columns.

(6) The debts shall be paid in priority to the creditors according to the order in which their names are arranged in column 2 of Schedule A.

3. It is hereby declared by the Court under section 28 (2) of the Act that alienations of properties bearing Nos. in Schedule B and incumbrances on properties bearing Nos. in the said Schedule B shall be void.

Seal.

Civil Judge, $\frac{\text{Senior}}{\text{Junior}}$ Division.

Dated the 19 .

Note.—In Schedule A in column 8, the amounts in respect of which a charge is kept should be entered separately according to each serial number of the properties described in Schedule B. In Schedule B properties on which charges are kept, properties, the possession of which is ordered to be delivered, properties which are liable to be sold and properties, the alienation of and incumbrances on which, are declared to be void should be described in different serial numbers

SCHEDULE A.

1	2		3
Name and address of the debtor.	Names and addresses of the creditors, arranged in order of priority mentioned in section 32 (2) (*iii*) including those creditors who are mentioned in section 3.		Amount of debt (secured or unsecured) originally claimed due by the creditor.
	Serial No.	Name and address of the creditor.	

4		5		6	
Amount of debt as scaled down by the Court under section 31 or otherwise made payable under the provisions of the Act.		Costs.		Court-fees.	
Amount.	Rate of interest at which further interest shall be payable.	Amount.	Names of parties who have to pay.	Amount.	Names of parties who have to pay and the manner of payment.

7					8	9
Amounts in column 4 ; how payable.						
In how many instalments.	Amount of each instalment.	When payable.		Total in words and figures.	Amount in respect of which a charge is kept.	Remarks.
		Year.	Month.			

SCHEDULE B.

(*a*) *Immovable Properties.*

1	2	3			4	5	6
Serial No.	Specification of properties with boundaries where necessary (Lands or Houses).	Names of villages with Survey Nos., etc.			Nature of debtor's right.	Details of any encumbrance, lien, mortgage or charge already subsisting thereon.	Remarks.
		Survey No. and Pot Hissa.	Area in acres.	Assessment.			

(*b*) *Moveable Properties.*

1	2	3	4	5
Serial No.	Description.	Places where it may be found.	Details of any mortgage, charge, or lien already subsisting thereon.	Remarks.

FORM No. 7.

[*See* Rule 9 (*i*).]

Award under section 33 (2) of the Bombay Agricultural Debtors Relief Act, 1947.

Proceedings No. of 195

Award of Court .....

Whereas on an application made under the Bombay Agricultural Debtors Relief Act, 1947, for the adjustment of debts of resident of (hereinafter referred to as the said debtor), this Court has determined under the provisions of the said Act the total amount of his debt as scaled down under section 31 of the said Act ;

And whereas the creditor(s) mentioned in the Schedule hereto annexed has/have all agreed to the further scaling down of the debts under sub-section (*1*) of section 33 of the said Act ;

And whereas the said debtor has not paid the amount of the debt as finally scaled down within period fixed by the Court and has not produced the creditor's receipt for the payment thereof ;

It is hereby directed under sub-section (*2*) of section 33 of the said Act that—

(*a*) the *.....Primary Land Mortgage Bank
†.....Bombay Provincial Co-operative Land Mortgage Bank, Ltd.
at ‡.....

shall pay the said creditor(s) in cash the amount of debt as finally scaled down under section 31 or section 33 (*1*), as the case may be, or if the creditor(s) so desires/desire, issue to him/them bonds issued by the Bombay Provincial Co-operative Land Mortgage Bank Ltd., and guaranteed by the State Government, in full satisfaction of all the debts due to him/them from the said debtor ;

(*b*) the said debtor shall pay to the said Bank a sum of Rs. with interest at the rate notified by Government from time to time in that behalf, under sub-section (*3*) of section 33 of the said Act from the date on which the said Bank pays the creditor(s) the amount of debt due to him/them or the date on which the bond(s) is/are issued, as the case may be, till the amount of the debt is paid in full by §.....annual instalments of Rs. each, the first instalment being payable on ;

(*c*) Rs. shall be paid as Court fee by and Rs. shall be paid as costs by to ; and ;

(*d*) all the immoveable property of the said debtor, described in column 4 of the Schedule hereto is hereby charged in favour of the said Bank until all the instalments mentioned in paragraph (*b*) are fully paid up.

Seal.

Civil Judge, $\frac{\text{Senior}}{\text{Junior}}$ Division,

Name of Bank, if any.
To be retained only if there is no Primary Land Mortgage Bank in the area.
Name of place where Bank is situate.
Here mention number of annual instalments.

Schedule.

1	2	3	4	5
Serial No.	Name and address of the creditor.	Amount of debt as finally determined by the Court to be payable to each creditor.	Description and full particulars of all the immoveable property of the debtor.	Remarks.

FORM No. 8.

(*See* Rule 10.)

To

The Court of Civil Judge, Senior/Junior Division,

.....

Under clause (*i*) of sub-section (3) of section 38 of the Bombay Agricultural Debtors Relief Act, 1947, I .....son of .....
.....resident of .....ta'uka.....
hereby apply for execution of award No. .....dated .....
passed by the Court as the debtor.....
has made default in the payment of the instalment due to be paid in the month of
.....year.....

Dated the .....19 . Signature of the Creditor.

FORM No. 9.

[*See* Rule 11 (*ii*).]

Form of Certificate of Sale.

This is to certify that has been declared the purchaser for Rs. at a sale by public auction on the day of 19 of in sale conducted by the in pursuance of section 41 or sub-section (2) of section 47 of the Bombay Agricultural Debtors Relief Act, 1947.

Officer conducting the sale.

FORM No. 9A.

(*See* Rule 12-A.)

Space for binding.	Serial No. of award.	Space on butt for pasting page.
1	2	3

FORM No. 9B.

(*See* Rule 12-A.)

Name of debtor.	Place of residence.	Name(s) of creditor(s).	Place(s) of residence.	Situation of property.	Date of award.	Date of filing.	Serial No., Volume and page.
1	2	3	4	5	6	7	8

FORM No. 9C.

(*See* Rule 12-A.)

Amount or value of award or amount involved.	Survey No. and sub-division No. and House No., if any.	Area.	Assessment or judi when given.	Name of debtor.	Name(s) of creditor(s).	Date of award.	Date of filing.	Serial No., Volume and page.	Remarks.
1	2	3	4	5	6	7	8	9	10

FORM No. 9D.

(*See* Rule 12-B.)

Forwarded with compliments to the Sub-Registrar of / Registrar ..... under section 46B of the Bombay Agricultural Debtors Relief Act, 1947.

Place : Civil Judge,

Date :

FORM No. 10.

(*See* Rule 14.)

Authority to advance loans to debtors.

In exercise of the powers conferred by sub-section (*1*) of section 54 of the Bombay Agricultural Debtors Relief Act, 1947 (Bom. XXVIII of 1947), the Government of Bombay is hereby pleased to authorise* (hereinafter referred to as the authorised person) to advance loans to debtors who are parties to any proceedings under the said Act or in respect of whose debts an adjustment has been made under the said Act.

2. This authority shall be in force in the following local areas :—

3. The authority shall remain in force from to (both days inclusive).

4. This authority is granted subject to the following conditions, namely :—

(*i*) *Purposes for which advances may be made and maximum limits of such advances.*—The authorised person shall not advance loans to any debtor except for the purpose of seasonal finance not exceeding the maximum limits which the Collector has fixed in this behalf under rule 15.

The authorised person shall not knowingly advance any loan to any debtor who had previously taken a loan from another authorised person unless such previous loan has been fully paid or unless he (the authorised person) agrees to discharge the liability of the debtor in respect of such previous loan.

(*ii*) *Authorised person not to withhold permission for sale of crops or produce.*—The authorised person shall not unreasonably withhold permission required by a debtor under sub-section (*1*) of section 53 for sale of the standing crops or the produce of his land and if the authorised person himself buys the crops or produce he shall pay the debtor the price thereof at the market rate.

*Here insert the name and address of the individual, joint stock company or other association to be authorised.

(*iii*) *Duty of authorised person to maintain and furnish accounts.*—(*a*) The authorised person shall keep regularly in Form No. 11 a separate account of each loan advanced to a debtor :

Provided that where the loans to any debtor are advanced on a current account, the authorised person may keep one account of all transactions relating to such loans.

Explanation.—For the purposes of this clause, the term "current account" includes, in the case of banks, accounts relating to overdrafts, cash credits and pro-note accounts, which are maintained in the form of current accounts.

(*b*) The authorised person shall, within one month after the expiry of every year, supply every debtor a full and correct statement of accounts signed by him or his agent. Such statement of accounts shall show all transactions entered into during the year and the balance outstanding on account of each loan on such date as Government may prescribe either generally or for any particular area and shall contain particulars as in Form No. 12 :

Provided that where the loans are advanced on a current account, it shall be sufficient to furnish particulars of the balance due on the whole of such account on the prescribed date. In the case of banks, the requirements of this clause shall be deemed to have been complied with if a full statement of accounts has been supplied to the debtor by means of a pass-book or otherwise from time to time throughout the year and intimation is given within one month after the expiry of the year of the amount of the balance remaining due on the prescribed date.

(*c*) The statement of accounts shall be furnished to the debtor by registered post and an acknowledgment obtained thereof at the cost of the authorised person.

(*iv*) *Rate and calculation of interest.*—(*a*) The authorised person shall not charge or recover interest at a rate higher than the rate notified by Government under rule 16.

(*b*) If any repayment is made in respect of a loan, interest on such loan shall be calculated up to the date of such repayment ; and if the loan or any part of it is still outstanding, interest shall thereafter be calculated only on the balance of the principal still outstanding.

(*v*) *Inspection of accounts to be allowed.*—The authorised person, unless specially exempted by Government, shall allow such officer as may be appointed in this behalf by Government to inspect the accounts maintained by him.

(*vi*) *Penalty for non-compliance with conditions mentioned in this rule.*—Government may in its discretion cance the authority granted by it for breach of any of the foregoing conditions or for any other reason.

Date 19 .

By order of the Governor of Bombay,

Secretary to Government.

FORM No. 11.

(*See* Rule 14 and Form No. 10.)

Loan account of , *son of* , *residence*

Date as at which account is made up—

1	2	3	4	5	6		7
Serial No.	Date of advancing loan.	Principal or balance of principal if brought over from previous year.	Rate of interest.	Date of repayment.	Payment credited towards		Remarks.
					Principal.	Interest.	
				Total repayment towards the loan during the year.			
				Balance, if any, at the end of year.			

FORM No. 12.

(*See* Rule 14 and Form No. 10.)

Loan account of , *son of* ,

residence , *for the year ending on*

Rate of interest

1	2	3	4	5		6	
Serial No. of loan.	Date of loan.	Principal amount of loan or balance of principal if brought over from previous year.	Amount of interest, if any, brought forward.	Payment credited during the year towards.		Balance outstanding at the end of the year.	
				Principal.	Interest.	Principal.	Interest.
				Total for all loans outstanding against the debtor.			

Dated the 19 .

Signature of creditor or agent.

THE BOMBAY MONEY-LENDERS ACT, 1946 (BOM. XXXI OF 1947).

G. N., R. D., No. 2393/49, dated 4th August 1949 (B. G., Pt. IV-B, p. 1639). S. 13A

In exercise of the powers conferred by section 13A of the Bombay Money-lenders Act, 1946 (Bom. XXXI of 1947), the Government of Bombay is pleased to authorise—

(*i*) the Inspectors under the Registrar and Assistant Registrar of Money-lenders for Bombay City ; and

(*ii*) all Revenue Officers of and above the rank of Aval Karkun

to exercise the powers under the said section, within their respective jurisdictions.

G. N., R. D., No. 1112, dated 12th May 1950 (B. G., Pt. IV-B, p. 907). S. 13A

In exercise of the powers conferred by section 13A of the Bombay Money-lenders Act, 1946 (Bom. XXXI of 1947), the Government of Bombay is pleased to authorise the Backward Class Welfare Officer and District and Sub-Divisional Co-operative Officers in Banaskantha and Sabarkantha Districts to exercise the powers under the said section within their respective jurisdictions.

G. N., R. D., No. 4312/45, dated 29th October 1947 (B. G., Pt. IV-B, p. 726A). S. 39 Bombay Moneylenders Rules, 1947.

Amended by G. N., R. D., No. 4312/45, dated 1st April 1949.

In exercise of the powers conferred by section 39 of the Bombay Money-lenders Act, 1946 (Bom. XXXI of 1947), the Government of Bombay is pleased to make the following rules, namely :—

1. *Short title.*—These rules may be called the Bombay Money-lenders Rules, 1947.

2. *Definitions.*—In these rules, unless there is anything repugnant in the subject or context—

(*a*) "Act" means the Bombay Money-lenders Act, 1946 ;

(*b*) "Form" means a form appended to these rules ; and

(*c*) "Section" means a section of the Act.

3. *Register of money-lenders.*—The register of money-lenders required to be maintained under section 4 shall be in Form No. 1

3-A. *Display of list of licensed money-lenders.*—Every Assistant Registrar shall display on a notice board in his office a list of money-lenders licensed to carry on the business of money-lending in the area under his jurisdiction. Such list shall contain the addresses of the money-lenders.

4. *Application for licence.*—(1) A money-lender desiring to carry on the business of money-lending in any area shall make an application in Form No. 2 to the Assistant Registrar concerned. The application shall be delivered at the office of the Assistant Registrar during office hours either personally by the applicant or through an agent duly authorised in writing in this behalf or sent by registered post addressed to the Assistant Registrar.

(2) An application for the grant of a licence for the first time may be made on any date but an application for renewal of licence shall be made in the month of May preceding the year for which the licence is to be renewed.

(3) [*Deleted.*]

4-A. *Change in partnership or management.*—If during the currency of a licence a new partner is taken up or a person is appointed as responsible for the management of the business of money-lending, the money-lender shall, within seven days communicate to the Registrar, the name of the partner so taken up or of the person so appointed; and shall satisfy the Registrar that the new partner or the person appointed

is not himself disqualified from holding a licence on any of the grounds mentioned in section 8.

4-B. *Change of address.*—A money-lender shall communicate to the Registrar any change in his address giving full details of the new address within seven days of such change.

5. *Procedure for summary inquiry under section 7.*—The Assistant Registrar shall make the summary inquiry under section 7 by calling for such information from the applicant and examining such persons as he may deem fit in order to satisfy himself about the *bona fides* of the applicant and his suitability for carrying on the business of money-lending. If from the information supplied and the examination made the Assistant Registrar is not so satisfied, he may examine the applicant personally. The Assistant Registrar shall maintain a record of such inquiry and shall sign below the same. The record shall contain a brief memorandum of the substance of evidence taken and a summary of the conclusions regarding facts elicited during the inquiry.

6. *Form of licence.*—The licence under section 7 shall be in Form No. 3.

7. *Manner of payment of licence fees.*—(1) The licence fee of Rs. 5 and Rs. 2 under section 6 shall be paid in cash at the time of presenting the application or by remitting it by postal money order addressed to the Assistant Registrar or by crediting to Government account at a treasury, sub-treasury or the Reserve Bank of India, Bombay, and forwarding the receipt of the postal money order or the receipted chalan to the Assistant Registrar along with the application.

(2) The Registrar while forwarding copies of the licence for the principal place and the application to other Registrar or Registrars shall make an endoresement in token of having received the requisite licence fee.

8. *Reasons for refusing to grant licence to be communicated to applicant.*—If a Registrar refuses to grant a licence, he shall communicate to the applicant his reasons for so doing.

9. *Appeal against order of Registrar refusing or cancelling a licence.*—(1) An appeal under sub-section (*3*) of section 8 or 8A against the order of a Registrar refusing to grant or cancelling a licence shall be instituted within 30 days from the date on which the order of refusal or cancellation is communicated to the money-lender.

(2) The Registrar General shall decide the appeal after hearing the appellant or his pleader, as the case may be.

9-A. *Display of licence.*—Every money-lender shall exhibit his licence in a prominent place on the premises where he carries on the business of money-lending. He shall also exhibit outside his premises a signboard showing (*i*) the name in which the business of money-lending is carried on and (*ii*) the number of his licence.

10. *Forms of cash book, ledger and of statement under section 18.*—The cash book and ledger to be maintained by a money-lender under sub-section (*1*), and the statement under clause (*a*) of sub-section (*2*), of section 18 shall be in Forms Nos. 4, 5 and 6 respectively.

11. *Annual Statement of accounts to be delivered by money-lenders to debtor, etc., under section 19.*—(1) The annual statement of accounts to be delivered by a money-lender to each of his debtors under sub-section (*1*) of section 19 shall be in Form No. 7.

(2) The statement shall be furnished to each of the debtors within sixty days after the close of the year for which the accounts of the money-lender are ordinarily maintained.

(3) The fee to be paid by a debtor to a money-lender for supplying a statement of accounts under sub-section (*2*) of section 19 shall be annas eight.

(4) The expenses to be recovered from a debtor for supplying copies of documents by a money-lender under sub-section (*3*) of section 19 shall be according to the following scale :—

For copying 100 words or fraction thereof—One anna.

For copying 100 words or fraction thereof of tabular statement—Two annas.

Cost of paper—$\frac{1}{4}$ anna per sheet of foolscap size.

11-A. *Fees for supply of statements of debts.*—The rate of fees which a money lender may recover for supply of statements under sub-section (*2*) of section 18 and sub-section (*1*) of section 19 shall be two annas per statement subject to a maximum of two rupees per debtor per year. The amount on account of these fees shall be shown separately in the debtor's account.

12. *Notice and information to be given on assignment of loan.*—The notice to be given to an assignee under clause (*a*), the statement of information to be supplied to an assignee under clause (*b*), and the notice to be given to the debtor under clause (*c*), of sub-section (*1*) of section 27, shall be in the Forms Nos. 8, 9 and 10 respectively.

13. *Form of application under section 30.*—The application to be made by a debtor under sub-section (*1*) of section 30 shall be in Form No. 11 and shall be accompanied by a Court-fee of Re. 1.

FORM 1.

(Rule 3.)

Register of Money-lenders.

Office of the Assistant Registrar of Taluka District .

Serial No.	Name, father's or husband's name, religion and full address of the money-lender.‡	Name, father's name, religion and full address of the person or persons responsible for the management of the business, if any.	Full details of the principal place of business and of the branches thereof.	Date and serial No. of previous licence if any.	Date of the issue of the present licence.
1	2	2A	3	4	5

Serial No. of application.	Cancellation of licence* if any, with date and particulars.	Orders of appellate authority if any.	Particulars of cancellation or suspension of licence under S. 14 (*ii*) (*a*) or disqualification under S. 14 (*ii*) (*b*).	No. of duplicate licences issued with dates.	Signature of Assistant Registrar.	Remarks.
6	7	8	9	10	11	12

‡ (1) In the case of an Undivided Hindu Family, Column 2 should show the names and addresses of the manager and adult co-parceners of such family; in the case of a bank or company the column 2 should show the names and addresses of the directors and manager or principal officer and in case of an unincorporated body of individuals, the names and address of all individuals.

* (2) When filling up this column the section of the Act under which cancellation is made should be entered.

FORM 2.

(Rule 4.)

Application for the grant of a licence to a money-lender.

In the Office of the Assistant Registrar of .....
P. O.
Taluka
District

1. Name of the applicant, with father's or husband's name, surname, residence and address in full.
   Names of the manager and the adult coparceners of the undivided Hindu Family, with fathers' names, surname, residence and address in full.
   Name of the Director, Manager or principal officer managing the Bank or company with father's or husband's name, surname, residence and address in full.
   Names of all the persons forming an unincorporated body, with father's or husband's names, surnames, castes, residences, and addresses in full.
2. Name in which the applicant carries on or intends to carry on his money-lending business.
3. Name of the area within which the applicant has his business of money-lending on the date of the application.
4. Names of persons responsible or proposed to be responsible for the management of the applicant's money-lending business, with father's or husband's name, surname, residence and address in full.
5. Location of the applicant's place or principal place of business, with full particulars thereof and the name, father's or husband's name, surname, and address of the person in charge.
6. Whether the person signing the application or any of the adult coparceners of an undivided Hindu family, or any Director, Manager or principal officer of the Bank or company or any member of the unincorporated body on behalf of which the application is made, as the case may be, carried on the business of money-lending in the State in the year ending on the 31st day of March immediately preceding the date of the application either individually, or in partnership or jointly with any other coparcener or any other person and whether in the same or any other name.
7. Is the applicant or any other person on behalf of whom the application has been made, carrying on or intends to carry on the business of money-lending in any other place in the State ? If so, give complete particulars with the name, father's or husband's name, surname, and address of the person in charge of each office. Give particulars of the location of each such office and the area within which the business of money-lending is being carried on or is proposed to be carried on at each such place.
8. What is the extent of the total business of the applicant on 31st March ?
9. What is the total amount of the capital which the applicant intends to invest in the business of money-lending in the year for which the application has been made ?

9A. What is the year for which the applicant's accounts are maintained ?

10. Has the applicant carried on the business of money-lending in the past and if so since when ?
11. Has any application for licence previously been made ? If so, when, where and with what results ?
12. In case the application has previously been granted, give full particulars of the licence.
13. Has any licence granted previously to the applicant been cancelled or suspended or does it contain any endorsements of the Court or any disqualifications imposed by the Court ? If so, full particulars should be given including the name of the officer and/or Court and the date and terms of the order.
14. Is money-lending the sole business of the applicant or is he engaged in any other business, profession or calling ?
15. (*i*) Whether the applicant is a full time servant in the employment of Government or of a local authorty ; if so, state the designation of the post held and (*ii*) whether by rules applicable to him in that capacity he is entitled to start or carry on the business of money lending.

Certified that all the facts set out in the application are true to my knowledge except.....paragraphs, which are true to my belief being based on information supplied by.....

Signature of the applicant
with date.

FORM 3.

(Rule 6.)

Money-lender's Licence.

District
Taluka
Place P. O.
Licence No.

This Licence has been granted to
to carry on the business of money-lending subject to the provisions of the Bombay Money-lenders Act, 1946, and the rules thereunder and the following conditions, namely :—

(1) The licence shall be valid up to 31st July.....

(2) It shall entitle the money-lender to carry on the business of money-lending in*

(3) The licensee shall surrender the licence when ordered to do so by the Registrar granting it or by the Registrar-General or by a Court.

Registrar.

(Seal of the Registrar) dated

* Here insert area.

[BACK.]

Endorsement, if any.

Signature. Remarks.-

FORM 4.

(Rule 10.)

Cash Book.

Dr.

RECEIPTS.

Date.	Particulars.	Ledger folio.	Amount.	
			Rs. a. p.	Rs. a. p.
1946.	Brought forward ..		6,000 0 0	
August 2 ..	Interest received from Jagat Ch. Mookerji on the mortgage bond dated ....from..... to.....		25 0 0	
				6,025 0 0
August 3 ..	To balance B/F ..		1,025 0 0	

Cr.

DISBURSEMENTS.

Date.	Particulars.	Ledger folio.	Amount.	
			Rs. a. p.	Rs. a. p.
1946.				
August 2 ..	Lent to B. C. Sen Rupees five thousand, interest per cent. per annum.		5,000 0 0	5,000 0 0
	By Balance C/F ..	....		1,025 0 0
				6,025 0 0

In case of loans in kind the entry shall contain clear reference to the commodity advanced with market value of same at the date of each transaction.

FORM 5.

(*See* Rule 10.)

Debtor.....

Name and address of the debtor.....

Ledger Account Ledger No.

Date.	Principal amount borrowed or debited.	Amount of fees due in respect of supply of statements of debts.	Amount repaid or credited.				Balance due after each transaction.			Details of calculation of interest.			Remarks.
			Principal.	Interest.	Fees for statements of debts.	Total.	Principal.	Interest.	Fees for statements of debts.	Principal due.	Months.	Amounts of interest recovered.	
1	2	3	4	5	6	7	8	9	1	11	12	13	14

FORM 6.

(Rule 10.)

Statement showing the details of condition of the loan.

Name of debtor :

Address :

(1) Amount of loan :
(2) Date of loan :
(3) Date of maturity of the loan :
(4) Rate of interest per annum :
(5) Nature of the security :
(6) Particulars of documents, if any :
(7) Any special conditions on which the loan has been made :
(8) Other connected information.

Signature of money-lender.

Name and address of money-lender :

Date :

N.B.—A separate statement shall be furnished in respect of each loan transaction. In case of loans in kind there shall be reference to the commodity advanced along with market value of the same at the date of each transaction.

FORM 7. [Rule 11 (*i*).]

Annual statement of accounts to be delivered by a money-lender to his debtors within sixty days after the close of the year.

Name of the Debtor ...
Occupation ...
Address ...
Number of Ledger Account ...
Amount of principal and interest separately due to the money-lender and the amount of fees due in respect of supply of statements of debts.
Amount of every payment already received by the money-lender in respect of the loan during the year together with the date on which each payment was made.
All payments credited first in the account of interest, and the residue, if any, of any payment more than sufficient to discharge the balance of interest due at the time it is made, credited to the debtor in the account of principal.
Payment made on account of fees due in respect of supply of statements of debts.
The amount of principal remaining unpaid and the interest thereon.
The amount of principal remaining unpaid, the interest thereon and the amount remaining unpaid on account of fees due in respect of statements of debts.
Date . Money-lender or his agent.

FORM 8. (Rule 12.)

Please take notice under clause (*a*) of sub-section (*1*) of section 27 of the Bombay Money-lenders Act, 1946, that pursuant to the agreement made by me with you to assign the loan / the balance of loan / interest on the loan / balance of interest on the loan advanced to Mr. Address together with accrued interest/balance of interest and benefits of the agreement under which the aforesaid loan was given to the debtor as well as security in respect of loan/interest on loan, you will be subject, with effect from * to the provisions of the Bombay Money-lenders Act, 1946.

Signature of the Money-lender.
Prior assignee of the Money-lender.
Date

* Here insert the date of assignment.

FORM 9.

(Rule 12.)

Statement of information to be supplied to the assignee under clause (b) of sub-section (1) of section 27 of the Bombay Money-lenders Act, 1946.

Name of money-lender including subsequent assignees, if any, and his/their address/addresses—

Name of debtor—

Address—

1. Date of loan—

2. Amount of loan—

3. Rate of interest per annum—

3A. Amount of fees due in respect of supply of statements of debts—

4. Total repayments made by the debtor up-to-date—

   (*a*) Principal ...
   (*b*) Interest ...
   (*bb*) Fees for supply of statements of debts.
   (*c*) Total ...

5. Amount outstanding on— ...
   (*a*) Principal ...
   (*b*) Interest ...
   (*bb*) Fees for supply of statements of debts.
   (*c*) Total ...

6. Nature and value of the security—

7. Particulars of documents including previous assignments, if any—

8. Any special condition attaching to the loan—

9. List of documents of which copies are attached—

10. Other information, if any—

Signature of Assignor/Money-lender.

Address

Date

FORM 10.

(Rule 12.)

To

_____

Debtor.

Please take notice under clause (*c*) of sub-section (*1*) of section 27 of the Bombay Money-lenders Act, 1946, that I propose to make an assignment of the loan / balance of loan / interest on loan / balance of interest on loan advanced to you on _____ together with accrued interest / balance of interest and benefits of the agreement under the aforesaid loan as well as security taken in respect of the loan / interest on the loan to

(Name of the assignee)

_____

(Address of the Assignee) _____ with effect from (dated) _____ and that from the date of such assignment, the assignee abovenamed shall exercise all rights and shall have all the liabilities under the provisions of the Bombay Money-lenders Act, 1946.

Signature of Money-lender.

Address

Signature of prior assignee of the Money-lender.

Address

FORM 11.

(Rule 13.)

(*Application to a Court under sub-section (1) of section 30 for taking accounts.*)

In the Court of

Mis. Case No.....of 19.....

The undermentioned debtor applies for taking accounts of the loan described below and for declaring the amount due to the money-lender.

Particulars of Loan.

1. Document, if any with particulars—

2. Amount—

3. Description of the money-lender :

   (*a*) Name—

   (*b*) Father's/Husband's name—

   (*c*) Address—

4. Description of the debtor :

   (*a*) Name—

   (*b*) Father's/Husband's name—

   (*c*) Address—

Date

Signature.

THE BOMBAY HABITUAL OFFENDERS RESTRICTION ACT, 1947 (BOM. LI OF 1947).

G. N., H. D., No. 3504/5, dated 24th February 1949 (B. G., Pt. IV-B, p. 405). **S. 15 (2)**

Under sub-section (*2*) of section 15 of the Bombay Habitual Offenders Restriction Act, 1947, the Government of Bombay is pleased to authorise all District Magistrates and the Commissioner of Police, Bombay, to make orders directing any person, who has been restricted within their respective jurisdictions, to be placed in a settlement established under sub-section (*1*) of the said section, for a period not exceeding the period for which the order of restriction has been made.

G. N., H. D., No. 3504/5, dated 11th February 1949 (B. G., Pt. IV-B, p. 283).

S. 22 Bombay Habitual Offenders Restriction Rules, 1948.

In exercise of the powers conferred by section 22 of the Bombay Habitual Offenders Restriction Act, 1947 (Bom. LI of 1947), the Government of Bombay is pleased to make the following rules, namely :—

1. These rules may be called the Bombay Habitual Offenders Restriction Rules, 1948.

2. In these rules, unless there is anything repugnant in the subject or context,—

(*a*) " Act " means the Bombay Habitual Offenders Restriction Act, 1947.

(*b*) " Form " means a form appended to these rules.

(*c*) " Government " means the Government of Bombay.

(*d*) " Order of restriction of movement " means an order made under section 7, 8 or 12 requiring a person to restrict his movements to any area.

(*e*) " Order of restriction of report " means an order made under section 7 8 or 12 requiring a person to report himself.

(*f*) " Reclamation Officer " means a Reclamation Officer for the settlements.

(*g*) " Restricted person " means a person in respect of whom an order of restriction has been made.

(*h*) " Section " means a section of the Act.

(*i*) " Settler " means a person ordered by Government or any officer authorised by Government under section 15 (*2*) to be placed in a settlement.

(*j*) " Settlement " means a settlement established under section 15 (*1*).

(*k*) " Superintendent " means a Superintendent of a settlement.

(*l*) Words and expressions used but not defined in these rules shall have the meanings assigned to them in the Act.

3. When an order of restriction has been made against any person, in Greater Bombay the Commissioner of Police and elsewhere the District Superintendent of Police shall cause a notice to be given to the Police Patel of the village in which the restricted person resides and to every owner or occupier of land on which such person resides and the agent of any such owner or occupier, in Form A and Form B, respectively, inviting their attention to the duties imposed on them by section 17.

4. In Greater Bombay the Commissioner of Police and elsewhere the District Superintendent of Police shall cause a register to be maintained in Form C of all restricted persons residing within their respective jurisdictions and make additions and alterations therein, from time to time, on the authority of the orders passed under section 11, 12 or 15.

5. At the time of making an order of restriction, the Court or Magistrate concerned shall determine, after making such inquiry as may be deemed necessary, the place where the person against whom the order is to be made ordinarily resides and shall record the name of such place in the order.

6. (1) Every person in respect of whom an order of restriction of report has been made shall, unless otherwise directed by the Order, report himself between the hours of 7 and 9 p.m. to the Police Patel of the village or the Officer-in-charge of the Police Station within whose jurisdiction he resides—

(1) for the first six months commencing from the date of the order of restriction on every day,

(2) for the next six months, at an interval of not more than 4 days, and

(3) for the remaining period, at an interval of not more than ten days :

Provided that if during any of the periods mentioned above—

(*a*) such person is convicted of any non-bailable offence or

(*b*) such person is reasonably suspected in Greater Bombay by the Commissioner of Police and elsewhere by the District Magistrate concerned for reasons to be recorded in writing of having been concerned in the commission of a non-bailable offence,

he shall report himself in the manner prescribed in clauses (1), (2) and (3) for the full periods mentioned therein, beginning, in the case mentioned in clause (*a*) with the date of the expiry of the sentence, and in the case mentioned in clause (*b*) with such date as the Commissioner of Police or the District Magistrate, as the case may be, may direct.

(2) If such person is a female, she may, if she so desires cause the required report to be made by any male relative. She shall not, however, thereby be exempted from any penalty to which she may be liable if such report is proved to be not true.

(3) The place of report shall unless otherwise directed by the order of restriction of report, be such as the Commissioner of Police in the case of Greater Bombay and the District Magistrate elsewhere may by general or special order direct, provided that if such person resides outside the radius of two miles from the place appointed by the District Magistrate, he shall report himself to such person as the District Superintendent of Police may direct.

7. Any Police Officer not below the rank of a Sub-Inspector may at any time hold a special roll call of all restricted persons residing within his jurisdiction and it shall be the duty of each such person to attend and answer to his name when the roll call is held.

8. Every person in respect of whom an order of restriction of report has been made shall notify his residence or any change or intended change of residence by reporting in person to the officer-in-charge of the Police Station within whose jurisdiction he is residing and also the village Police Patel if he is residing in a village. When making the report for change or intended change of residence, he shall notify the location of his intended new residence and the day on which he proposes to move to such residence.

9. (1) When any person in respect of whom an order of restriction of report has been made intends to absent himself from his residence for one or more nights, he shall notify his intended absence

(*a*) if he is residing in a village—

(*i*) to the Police Patel of the village, when the period of intended absence does not exceed seven days ;

(*ii*) to the Police Patel of the village and the officer-in-charge of the Police Station concerned when the period of intended absence exceeds seven days ;

(*b*) if he is residing in a place other than a village to the officer-in-charge of the Police Station within whose jurisdiction he is residing.

(2) Such person shall, at every place where he halts for the night, notify to the village Police Patel or in the case of a town to the officer-in-charge of the Police Station his arrival at and departure from that place as also the place to which he next intends to proceed and halt for the night.

(3) On arrival at his destination such person shall report himself to the village Police Patel or in the case of a town to the officer-in-charge of the Police Station concerned.

(4) For recording the temporary absence of such person a temporary absence form as in Form D shall be used. The village Police Patel may issue this absence form when the person is residing in a village and when the period does not exceed seven days and in other cases the form shall be issued by the officer-in-charge of the Police Station concerned.

10. When a person in respect of whom an order of restriction of report has been made fails to report himself as specified in the order or as laid down in rule 6 it shall be competent for the Police Patel of the village in case the person is residing in a village or in other cases for the officer-in-charge of the Police Station, within whose jurisdiction the person is residing, to pay a domiciliary visit by day or night to verify the presence of the restricted person in his place of residence. It shall then be the duty of such person if he is present, to appear personally before the Police Patel or such officer, as the case may be, or in the case of physical unfitness to appear, otherwise to satisfy the Police Patel or such officer of his presence.

Note.—The provisions of this rule do not authorise the officer paying a visit to enter the residence of any person.

11. The area to which the movements of a person in respect of whom an order of restriction of movement has been made shall, unless otherwise directed by the order, be—

(*a*) if the place of his residence is in Greater Bombay, the area of the Police Station in whose jurisdiction he resides, from 9–00 p.m. to 5–00 a.m. and the limits of Greater Bombay from 5–00 a.m. to 9–00 p.m.,

(*b*) if the place of residence is in a village, the limits of the village from 9–00 p.m to 5–00 a.m. and the limits of the Police Station from 5–00 a.m. to 9–00 p.m.,

(*c*) if the place of residence is in a town, the limits of the town.

12. Any person in respect of whom an order of restriction of movement has been made shall not leave or be absent from the limits of the area to which his movements have been restricted, without having obtained a pass in Form E in the manner laid down in rule 13 :

Provided that where the area of restriction is smaller than the area of the Police Station within which it is situated, nothing contained in this rule shall be deemed to render it illegal for a restricted person to quit the limits of that area for the purpose of appearing at the Police Station within the limits of which he is residing or before any Court in obedience to any process of the court or before any court having jurisdiction to complain of an offence affecting himself or his family or to apply for a pass under these rules ;

Provided further that such person shall before leaving the area give notice to the Police Patel of his village or the officer-in-charge of the Police Station and shall proceed straight to the Police Station or the Court, as the case may be.

13. (1). The Police Patel of the village in which the person in respect of whom an order of restriction of movement has been made resides may grant to such person a pass in Form E authorising him to leave the area to which his movements have been restricted for one day between the hours of sunrise and sunset.

(2) The officer-in-charge of a Police Station within whose jurisdiction such person resides may on due cause being shown grant to such person leave of absence not exceeding 15 days and issue the pass.

(3) In Greater Bombay the Commissioner of Police and elsewhere the District Superintendent of Police concerned may grant to such person leave of absence for any period exceeding 15 days and issue the pass.

(4) Any pass granted under this rule shall be drawn up in triplicate and each pass shall be signed by the officer granting the leave. One pass shall be retained by such officer, the second shall be given to the person to whom leave has been granted and the third shall be sent to the officer in charge of the Police Station within the limits of which the destination of the holder of the pass lies.

14. (1) Any person who obtains leave of absence under rule 13 shall travel to his destination and return to his residence by the route specified in the pass. He shall have the time and date of his arrival endorsed on the pass by the Police Patel of the village of the destination or if his destination be a town by the officer in charge of the Police Station concerned.

(2) During the time such person is on leave he shall report himself every evening to the Police Patel of the village or the officer-in-charge of the Police Station within whose jurisdiction he happens to be and while at destination he shall report himself to the officer-in-charge of the Police Station and produce his pass for endorsement.

(3) Such person shall not overstay the period of leave.

(4) During the period of residence at his destination such person shall not be absent from his residence at any time between sunset and sunrise or go beyond the limit of 5 miles from his residence during day time.

(5) Before returning to his residence such person shall have the time and date of departure endorsed on the pass by the Police Patel or the officer-in-charge of the Police Station concerned and on his return to his residence he shall deliver up the pass to the officer-in-charge of the Police Station or the village Police Patel through whom he received it. Such pass, if originally issued by the Commissioner of Police or the District Superintendent of Police, shall be forwarded to him by the officer-in-charge of the Police Station.

15. A pass granted under rule 13 may at any time be withdrawn by the authority granting it and the leave granted shall thereby be cancelled.

16. (1) Exemption from reporting at intervals and from taking passes for leave of absence may be granted to any restricted person by the Commissioner of Police or the District Magistrate or by any other officer authorised under section 11 (3), if he is satisfied on enquiry that such person has shown a marked improvement and given unmistakable evidence of good conduct and sustained industry in earning his livelihood and has not been reasonably suspected of committing a non-bailable offence. In any area outside Greater Bombay such exemption shall be intimated to the District Superintendent of Police concerned.

(2) The case of every restricted person shall be reviewed by the Commissioner of Police or the District Magistrate or other officer authorised in this behalf for the purpose of such exemption after a year from the date of the order of restriction and every six months thereafter.

17. Every restricted person who has been exempted in accordance with the provision of rule 16 shall be granted by the Commissioner of Police or the District Superintendent of Police, as the case may be, a certificate of identity in Form F specifying the nature of exemption granted.

18. In Greater Bombay the Commissioner of Police and elsewhere the District Superintendent of Police concerned may issue to any person in respect of whom an order of restriction of movement has been made a permanent pass in Form G, specifying the days and the hours during which such person may visit the nearest bazar or market place outside the area to which his movements have been restricted, for making purchases or sales.

19. The general control of all settlements shall vest in the Reclamation Officer, who may be assisted by one or more Assistant Reclamation Officers.

20. Every settlement shall be under the supervision of a Superintendent and the Superintendent shall be responsible for the enforcement of these rules, for the internal administration of the settlement and the general welfare of the settlers.

21. The Reclamation Officer and the Assistant Reclamation Officers shall be responsible to visit the settlements under their control once in every six months and conduct inspection.

22. (1) Separate sections shall be provided in every settlement for the following types of settlers :—

(*i*) for single male settlers,
(*ii*) for single female settlers, and
(*iii*) for settlers belonging to the same family.

(2) Settlers of one type shall not be allowed to visit another type or section of the settlement.

23. Every settler shall, unless he is by old age, physical infirmity or illness unfit for manual labour, be employed on some kind of labour or industry or work suited to his physical condition as may be approved for each settlement by the Reclamation Officer.

24. The Superintendent in charge of a settlement shall satisfy himself that every settler residing in the settlement is provided with sufficient means of subsistence and he shall report forthwith to the Reclamation Officer if there be any difficulty in this respect.

25. (1) In an industrial settlement every settler shall be paid during the period of his apprenticeship of 200 days from the date of his admission subsidy amount sufficient for his maintenance or diet according to scale, and taught some trade provided in the settlement.

(2) The Reclamation Officer may in respect of any settler increase the apprenticeship period up to 250 days.

(3) On the expiry of the apprenticeship period the settler shall be given work as far as possible on the contract system of payment by piece work, the worker being paid at least $\frac{3}{4}$ of the estimated value of the work done by him.

(4) Notwithstanding anything contained in this rule, the Superintendent may, either during the apprenticeship period or thereafter, employ any settler on any remunerative job with which the settler is familiar such as will work or work under private contractors.

26. When a settler earns in a settlement more money than is necessary for his maintenance, the Superintendent may deposit the surplus, from time to time, in a savings bank account opened in the name of such settler. When an account of this nature has been opened, the pass book shall be made over to the depositor who shall produce it whenever called upon by the Departmental officers for inspection or for the purpose of making further deposits.

27. Every settler shall be provided at Government cost a set of clothings and beddings once only on admission according to the prescribed scale. At the discretion of the Reclamation Officer a settler may be supplied clothing and beddings a second time if the settler is unable to purchase them on account of his physical or mental disability.

28. Unless exempted under sub-rule (3) of rule 29 no settler shall leave the limits of the settlement without a pass. The limits of the settlement shall be such as may be specified by the Reclamation Officer.

29. (1) A pass in Form H permitting the settler to proceed to any place in the State may be granted by the Superintendent for a period not exceeding two months, subject to such restrictions as may be imposed by the Reclamation Officer.

(2) A pass to proceed to any place for any specific period may be granted to any settler by the Reclamation Officer.

(3) The Reclamation Officer may in special circumstances exempt any settler from taking a pass for proceeding to any place.

30. A settler using a pass granted under rule 29 shall notify his arrival immediately to the authority specified in the pass in the village, town or settlement at which he has arrived and shall thereafter report himself at such times and places as shall have been specified in the pass.

31. Except when absent on a pass granted under rule 29 or when exempted from the roll call by the Reclamation Officer every settler shall attend the roll call held daily at such time or times as may be fixed by the Reclamation Officer and before such persons and at such places as may be appointed for this purpose by the Superintendent.

32. The Superintendent or any member of the staff of the settlement authorised in this behalf by the Reclamation officer may search any settler on admission and subsequently whenever necessary and inspect his personal effects and his residence. Any article forbidden such as liquor, opium, ganja and also articles which are used as weapons of offence or any property suspected to be stolen, found with the settler shall be attached. After attachment an inquiry shall be held by the Superintendent who shall record the statement of the person from whom the article was attached as to his possession. The Superintendent may then dispose of the property according to law.

33. The Reclamation Officer shall decide what domestic animals may be kept by any settlers in the settlement and issue orders to ensure that they are kept under proper control and sanitary condition. The animals of any settler who disregards the order may be sold and the proceeds given to the owner.

34. A settler shall not—

(*a*) refuse to perform any suitable work provided for him nor shall he engage in any work prohibited by the Superintendent,

(*b*) commit any act of indecency,

(*c*) refuse to obey any orders issued by the Superintendent to ensure proper sanitation of the settlement,

(*d*) without a permit from the Superintendent, partake of or possess liquor, opium, ganja or other intoxicants,

(*e*) misbehave or cause any disturbance by the violent conduct or quarrelling,

(*f*) gamble or bet,

(*g*) join any trade union or political organisation,

(*h*) beg,

(*i*) resist or refuse to obey any lawful order issued by the Superintendent or refuse to give a true account of his movements,

(*j*) without a permit from the Superintendent mortgage or sell movable or immovable property exceeding Rs. 5 in value,

(*k*) have in his possession any article which has been forbidden by the Superintendent as capable of use as a weapon of offence,

(*l*) fail to assist in the maintenance of discipline or to give assistance to an officer of the settlement when called upon to do so in the interests of the institution,

(*m*) do or omit to do any act with intent to cause to himself any illness, injury or disability,

(*n*) leave without permission the working party to which he is assigned or the part of the premises in which he may be required to be present at any particular time,

(*o*) endeavour to escape from the settlement limits within which he is legally required to stay.

35. Any breach of these rules on the part of a settler may at the discretion of the Superintendent be dealt with according to the nature of the offence or for other reasons to be recorded in writing in any one or more of the following ways :—

(*i*) formal warning to be recorded in history sheets,

(*ii*) confinement in lock up for a period not exceeding 3 days,

(*iii*) solitary confinement not exceeding 10 days at a time,

(*iv*) penal diet or stoppage of wages,

(*v*) fine not exceeding Rs. 10,

(*vi*) requiring him to furnish a bond with or without personal or cash sureties in an amount not exceeding Rs. 25,

(*vii*) prosecution under section 18.

36. The Superintendent may deal departmentally in any of the ways provided in rule 35, except clause (*vii*) of that rule, with any settler he considers guilty of a trivial offence of theft, cheating, extortion or receiving or disposing of stolen property (the property in each case being less than Rs. 10), which comes directly to the notice of his settlement staff, or for which investigation has been refused by the Police under the proviso to sub-section (*1*) of section 157 of the Code of Criminal Procedure, 1898, or for which the case has been withdrawn under section 495 of the said Code on condition that the offence is dealt with departmentally, provided that the alleged offender may elect to be tried in a Criminal Court.

37. The Superintendent shall have power to recover any fine imposed under rule 35 and the amount due from a surety either in a lump sum or by instalments and where there is a wilful default in the payment of the fine or the amount of surety bond, he shall have power to attach and sell the movable property of the person fined and of the surety, if such surety be a settler.

38. The Superintendent or any memoer of the staff of the settlement authorised in this behalf by the Reclamation Officer may attach any intoxicant found with any settler without a permit under clause (*d*) of rule 34 or any betting money or instrument of gaming used for the purpose of gambling. After attachment, an inquiry shall be held by the Superintendent as to the possession of the articles attached. Where the articles attached consist of an intoxicant or do not exceed in value Rs. 10, the Superintendent shall, after the inquiry either return the articles to the person appearing to be entitled thereto or order them to be sold and the sale proceeds given to such persons or in the case of intoxicants and instruments of gaming, order them to be destroyed. In other cases, the Superintendent shall, after the inquiry, forward the articles to the Reclamation Officer who may dispose of them in a similar manner.

39. The Superintendent or any member of the settlement staff authorised in this behalf by the Superintendent or any Police Officer may bring under arrest any person ordered to be placed in a settlement or who being an inmate of a settlement is released from custody or imprisonment and may arrest any such person who escapes or attempts to escape from the limits of the settlement specified under rule 28.

40. The Superintendent may report to the Reclamation Officer the name of any person residing in a settlement whose presence in the settlement he considers to be undesirable. The Reclamation Officer may arrange for the transfer of such person to another settlement where he can be placed under stricter discipline.

41. The transfer of a settler from one settlement to another may be made by the Reclamation Officer for administrative reasons or for any other reason whatsoever.

42. (1) A settler may be released conditionally on licence by the Reclamation Officer, if in his opinion, such person has given unmistakable evidence of good conduct and sustained industry and is not likely to commit an offence again and a capable of maintaining himself and his dependents by honest means and fulfils the following conditions :—

(*a*) He has resided in a settlement for not less than 1 year.

(*b*) He has not been awarded any disciplinary punishment for serious breach of these rules during the six months preceding the date of release.

(2) A settler so released shall be granted a licence in Form I.

(3) The period of the licence shall not extend beyond the date on which the period of order of restriction expires.

43. (1) A person released on licence from a settlement under rule 42 shall be required to observe the following conditions :—

(*a*) He shall reside in such place as the Reclamation Officer may determine,

(*b*) Refrain from joining any trade union or political organisation,

(*c*) Be of good conduct,

(*d*) Obey whilst released on licence, such conditions as to roll call and taking of passes as may be ordered by the Reclamation Officer.

(2) Failure to comply with any of the above conditions shall at the discretion of the Reclamation Officer render the released settler liable to recommitment to a settlement.

44. The Reclamation Officer—

(*i*) may himself exercise any of the powers of a Superintendent under these rules, or

(*ii*) may delegate to any Assistant Reclamation Officer any of the said powers exercisable by the Superintendents or any powers vested in himself under these rules except that of release of a settler on licence, or of exempting a settler from taking passes.

45. (1) If the Reclamation Officer is satisfied that it is in the interests of a settler that his dependants should reside with him in the settlement, the Reclamation Officer may, if they so desire permit them to reside in the settlement :

Provided that before such permission is granted the Reclamation Officer shall—

(*i*) ascertain by making such enquiries as he deems fit that according to the custom of the community to which the settler belongs, he is responsible for the maintenance of the dependants and that the settler and his dependants cannot suitably live apart, and

(*ii*) obtain an undertaking from the settler that the dependants shall observe the discipline of the settlement and that he shall be responsible for the breach of the provisions of rule 34 specified in sub-rule (2) committed by any of his dependants.

(2) The dependants of the settler shall, so long as they reside in the settlement, observe the discipline of the settlement and particularly the provisions contained in clauses (*b*) to (*i*) and clause (*k*) of rule 34.

(3) The settler shall exercise proper supervision over his dependants and shall not be an accessory to any breach of the provisions of rule 34 specified in sub-rule (2) committed by any of his dependants.

(4) Any breach of the provisions of rule 34 specified in sub-rule (2) by any of the dependants may, at the discretion of the Superintendent, be dealt with as provided in clauses (*i*) to (*vi*) of rule 35 and the punishment imposed on the settler concerned, if the Superintendent, after making the necessary enquiry is satisfied that the settler did not exercise proper supervision over his dependants or that the settler was accessory to the breach.

Explanation.—For the purposes of this rule, dependants means the wife of the settler and his children under 16 years of age.

46. (1) For every settlement there shall be a Visiting Committee consisting of 12 members of whom five, including the Chairman, shall be officials and seven shall be non-officials. The Superintendents shall be the ex-officio Secretary of the Committee.

(2) Every non-official member shall hold office for a period of one year from the date of his appointment.

(3) A non-official member shall be eligible for re-appointment on the expiry of his term of office.

(4) The tenure of appointment of a non-official member may be terminated by Government at any time without assigning any reason.

(5) The non-official members shall not be entitled to any travelling, daily or conveyance allowance for attending to the work of the Visiting Committee.

47. (1) It shall be the duty of the members of the Visiting Committee :—

(*a*) to visit the Settlement once a month according to a rota which shall be drawn up by the Chairman after consulting the members ;

(*b*) to attend quarterly meetings which shall be held in the months of January, April, July and October ;

(*c*) to inspect all parts of the Settlement and see every settler detained therein.

(2) It shall be the duty of the Visiting Committee :—

(*a*) to satisfy itself that necessary measures for discipline, employment and medical care are being taken ;

(*b*) to give every settler an opportunity of making applications and complaints to it and to enquire into the same ;

(*c*) to inspect the accounts and other registers and the records of settlers ;

(*d*) to consider any other matter connected with the progress of the settlement and the welfare of the settlers.

48. A copy of the proceedings of each meeting of the Visiting Committee and also of the remarks recorded by the members of the Visiting Committee at the time of their visits shall be sent to the Reclamation Officer with such remarks as the Superintendent may desire to offer in explanation or otherwise and thereupon the Reclamation Officer shall pass such orders as he thinks necessary. The Superintendent shall place a copy of such orders before the Quarterly meeting of the Committee or send it to the member making the remarks, as the case may be.

FORM A.

(*See* rule 3).

NOTICE.

To

The Police Patel of

(Name, etc.)

The person noted in the margin against whom an order of restriction has been made under section...of the Bombay Habitual Offenders Restriction Act, 1947, has come to reside / is residing in the village .....in the jurisdiction of this Police Station. *You are directed to enter his/her name in the roll-call register of the village.

Name.
Father's / Husband's name.
No. on Register

The said person is to report himself/herself to.....between the hours of.....He/she is also/not restricted in his/her movements to the limits of district/Police Station/Village.

Your attention is hereby drawn to the duties imposed on you under section 17 of the Bombay Habitual Offenders Restriction Act, 1947, and your liability under section 21 of the said Act should you fail to discharge them.

Officer-in-charge of the Police Station.

Date.

Place.

---

*This sentence will be scored out when an order of restriction of report has not been made against the person.

FORM B.

See rule 3.)

NOTICE.

To

The owner or occupier of the land concerned.
The agent of the owner or occupier of the land concerned.

(Name, etc.)

The person noted in the margin against whom an order of restriction has been made under section...of the Bombay Habitual Offenders Restriction Act, 1947, has come to reside / is residing. on the premises owned by you/occupied by you/under your management, in the jurisdiction of this Police Station. Your attention is hereby drawn to the duties imposed on you under section 17 of the Bombay Habitual Offenders Restriction Act, 1947, and to your liability under section 21 of the said Act should you fail to discharge them.

Name.
Father's / Husband's name
No of Register.

Officer-in-charge of the Police Station.

Date.

Place.

FORM C.

(*See* rule 4.)

REGISTER OF RESTRICTED PERSONS UNDER THE BOMBAY HABITUAL OFFENDERS RESTRICTION ACT, 1947.

(To be entered by the Officer making the Register.)

Serial No. ...

Caste ...
Sub-caste ...
No. and date of the order of restriction under section 7, 8 or 12 of the Act.
(1) Name with aliases of the restricted person.
Father's/Husband's name ...
(2) Residence at the date of the order: Village ...
Police Station.
District ...
(3) Place of origin Village ...
Police Station.
District ...

(4) Place of proposed residence .. Village ..
Police Station
District ..

(5) Descriptive roll .. Age ..
Height ..

(6) (*a*) Area to which movements are restricted. Village ..
Police Station
District ..

(*b*) Manner in which required to report.

(7) Left thumb impression of the restricted person on being made aware of the provisions of the Act and the rules made thereunder which he/she must comply as also the penalties laid down for non-compliance with the same.

(8) Signature and designation of the officer making the Register with date.

(9) Date of placing the Register in the keeping of the Commissioner of Police/the District Superintendent of Police.

(10) Signature and designation of the officer-in-charge of the Register with date.

(Entries to be made by the Commissioner of Police/the District Superintendent of Police.)

S. No. according to each Police Station.

Date on which finger impression slip sent to the Bureau.

Finger Impression Classification.

Convictions.

(Convictions before registration to be shown in red ink.)

No.	Name under which convicted.	District and Court.	Date.	Section.	Sentence.	Name of jail in which confined and number on jail register.
1	2	3	4	5	6	7

1. Date and name of district to which transferred.
2. Name of settlement where sent with date of despatch
3. If put on probation, the date and nature of exemption granted.
4. Date on which restrictions re-imposed

FORM D.

(*See* rule 9.)

TEMPORARY ABSENCE FORM.

Issued to (Name)

Caste

FORM D.

(*See* rule 9.)

TEMPORARY ABSENCE FORM.

Son/wife of

Reg. No.

Same as on left side.

Resident of village who has notified his/her intention to be temporarily absent from his/her residence.

Place or places he/she proposes to visit and persons he/she proposes to stop with :—

Place.	Probable date.	Persons or place where he/she will stop.	Probable period of halt.

Age and marks of identification or thumb mark.

Name of Police Station/village ..

Date of issue 194 .

Signature of the officer in charge of the Police Station or the Police Patel of the village issuing the Form.

FORM E.

(*See* rules 12 and 13.)

(PASS TO BE HANDED OVER TO THE RESTRICTED PERSON TO WHOM LEAVE OF ABSENCE FROM THE AREA HAS BEEN GRANTED.)

1. Serial No. ..
2. Name and father's or husband's name.
3. Sex and age ..
4. Caste and sub-caste ..

5. Period of absence sanctioned ... From To

6. Place to which proceeding ...

7. Route to be taken { when proceeding ... / when returning ...

8. Business on which proceeding ...

9. Name of the Police Station from which leave was granted and the date of issue.

10. Left thumb impression of the person granted leave.

Signature of the officer issuing the pass.

Date and hour of					
Leaving Home.	Arrival at	Reporting at Police Station.	Departure from.	Return Home.	Signature of the person to whom the holder has reported himself.

Remarks by the officer in charge of the Police Station.

FORM F.

(*See* rule 17.)

FORM F.

(*See* rule 17.)

To be given to the restricted person.

CERTIFICATE OF IDENTITY TO BE GIVEN TO A RESTRICTED PERSON WHO HAS BEEN GIVEN EXEMPTIONS UNDER RULE 16.

Register No. Caste. Same as on left side.

1. District ...

2. Name with aliases ...

3. Father's/Husband's name ...

4. Place of original residence ...

5. Descriptive marks of identification with impression of left thumb.

6. Date of exemption ...

7. Nature of exemption ...

8. Date of final discharge ...

Note.—This certificate is granted in accordance with rule 17 of the Bombay Habitual Offenders Restriction Rules, 1948.

(1) It should be produced on demand by any Police Officer or Magistrate.

(2) It should not be handed over to any other person for use.

(3) The holder is bound to give his finger impression if demanded by any officer in charge of a Police Station.

Date of issue.

Signature of the Commissioner of Police, Bombay. / the District Superintendent of Police.

FORM G.

(*See* rule 18.)

PERMANENT PASS FOR VISITING BAZAR, ETC.

1. Register No. ...
2. Name and father's or husband's name
3. Age ...
4. Caste and sub-caste ...
5. Place of nearest bazar ...
6. Days and hours when permitted to visit.
7. Period of absence sanctioned ... From to
8. Name of the Police Station within whose jurisdiction the person resides.
9. Left thumb impression of the person granted pass.

Date of issue.

Signature of the Commissioner of Police, Bombay. / the District Superintendent of Police.

FORM H.

(*See* rule 29.)

PASS PERMITTING A SETTLER TO LEAVE THE LIMITS OF THE SETTLEMENT.

1. Name of person to whom pass is granted.
2. Register No. ..
3. Village or settlement ..
4. Taluka ..
5. Period for which pass is valid .. from to
6. Name of the village or settlement to which he is permitted to go.
7. Name of the person to whose house he is going.
8. Purpose of journey ..
9. Places at which he must report on the way.
10. Time or times at which he should give roll call.
11. Authority before whom he should give roll call.

Date

Signature of the officer granting pass.

(On the reverse of the pass.)

Village or settlement.	Date and hour of report of arrival.	Date and hour of report of departure.	Signature of the person to whom the holder has reported himself.

FORM I.

(*See* rule 42.)

LICENCE RELEASING A SETTLER CONDITIONALLY

Name

Caste

Register No. may be discharged from

Settlement under the provision of rule 42 of the Bombay Habitual Offenders Restrictions Rules, 1948, provided he accepts the following conditions during the period of licence which shall be valid up to

(*a*) He shall reside at Village

Taluka District.

(*b*) He shall refrain from joining any trade union or political organisation.

(*c*) He will be of good conduct.

(*d*) He will give weekly roll call on Friday before the Police Patel of the village or other person appointed for this purpose.

(*e*) He will notify whenever he intends to be absent from his place of residence for the night to the police patil of his village or to the officer-in-charge of a Police Station in the same way as other restricted persons living in the area are required to do. For sanction to move beyond the limits of the above district the Superintendent of Settlement may give him a pass valid up to six months. The Reclamation Officer or the Commissioner of Police/The District Superintendent of Police may give such pass for any period.

In the event of the breach of any of the above conditions of which the Reclamation Officer shall be the sole Judge, he the settler shall be liable to be replaced in a settlement by the Reclamation Officer, the discharge on the licence being cancelled.

The period of licence will date from the time the settler moves from the limits of the settlement to reside in the above village having accepted the above conditions.

Signature of the Reclamation Officer.

Date

The above conditions have been read over to me and I accept them.

Signature of the settler.

Explained by me and accepted by him.

Superintendent,
Settlement.

He left the settlement limits to reside in the above village on

Superintendent,
Settlement.

THE BOMBAY WAREHOUSES ACT, 1947
(BOM. LVI OF 1947).

G. N., R. D., No. 6284/45, dated 1st April 1949 (B. G., Pt. IV-B, p. 817). **S. 34**

In exercise of the powers conferred by section 34 of the Bombay Warehouses Act, 1947 (Bom. LVI of 1947), the Government of Bombay is pleased to make the following rules, namely :— **Bombay Warehouses Rules, 1949.**

I. Preliminary.

1. *Short title.*—These rules may be called the Bombay Warehouses Rules, 1949.

2. *Definitions.*—In these rules, unless there is anything repugnant in the subject or context—

(1) " Act " means the Bombay Warehouses Act, 1947 (Bom. LVI of 1947) ;

(2) " Form " means a form appended to these rules ;

(3) " Non-negotiable receipt " means a receipt in which it is stated that the goods therein specified will be delivered to the person or firm which tendered the goods to the warehouseman for storing in the warehouse.

(4) " Prescribed authority " means the Assistant Registrar of Co-operative Societies appointed under the Bombay Co-operative Societies Act, 1925, within the limits of his jurisdiction ;

(5) " Section " means a section of the Act ;

(6) " Year " means the calendar year commencing from the first day of January.

II. Licences.

3. *Application for licence.*—(1) Applications for taking out a licence under section 4 and for its renewal under section 7 shall be made to the prescribed authority in Form No. 1 and application for issue of a duplicate licence in Form No. 2. The application shall be signed by the applicant and he shall be bound to supply such additional information as may be required by the prescribed authority for the purpose of section 6.

(2) The application for licence for the first time shall be made at any time but that for renewal thereof shall be made every year at least one month prior to the commencement of the year for which it is required and shall be accompanied by the fee laid down in rule 4 or 8, as the case may be.

(3) A person desiring to conduct the business of a warehouseman in more than one village or town shall submit separate applications for licences in respect of his business in each such village or town. In case he has more than one place of business in the same village or town, he may apply for only one licence in respect of all such places of business provided he specifies which of them will be his principal place of business.

4. *Scale of fee for grant of licence.*—The scale of annual fees prescribed for grant of a licence under section 5 to a warehouseman for the conduct of his business shall be as under :—

	Rs.
Warehouse having a storage capacity up to 25,000 cubic feet ...	50
For every additional 25,000 cubic feet storage capacity or fraction thereof	50

5. *Terms of licence.*—A licence under section 5 shall be granted subject to the following conditions :—

(1) Every warehouseman shall have and maintain in respect of each warehouse for which the application for a licence has been made, net assets liable for the payment of any indebtedness arising from the conduct of the warehouse to the extent of at least Rs. 5 per 100 cubic feet storage capacity of the licensed warehouse. Such assets may also consist of moveable or immoveable property of the required valuation. In case buildings, machinery or merchandise are included among such assets, the warehouseman shall keep them insured against loss or damage by fire with a company or companies approved by the prescribed authority.

(2) Immediately upon receipt of his licence, the warehouseman shall post the same and keep it posted until suspended or revoked, in a conspicuous place in the principal office where receipts issued by such warehouseman are delivered to depositors.

(3) Whenever any of the conditions mentioned in clause (*c*) and (*e*) of section 8 shall come into existence, it shall be the duty of the warehouseman to notify immediately the authority granting the licence of the condition to the best of his ability.

(4) Every warehouseman shall permit the prescribed authority or any officer deputed by him to inspect or examine a warehouse licensed under the Act, to enter and inspect or examine on any business day, during the usual hours of business, any warehouse for the conduct of which such warehouseman holds a licence, the office thereof, the books, records, papers and accounts relating thereto and the contents thereof and such warehouseman shall furnish such officer the assistance necessary to enable him to make the inspection or examination.

6. *Period of licence.*—A licence shall be valid with effect from the date on which it is granted for the period ending 31st December following or a period not exceeding three years ending 31st December following.

7. *Security.*—Every warehouseman shall at the time of the application for licence either,—

(*a*) furnish to the prescribed authority security deposit in cash or public securities assessed at the rate of Rs. 5 per 100 cubic feet of the storage capacity subject to a minimum of Rs. 1,000 and execute a bond in Form No. 3 for the observance of the conditions and obligations arising out of his business as a warehouseman, or

(*b*) execute a bond with two sureties to the satisfaction of the prescribed authority for a like amount.

8. *Fee for renewal and issue of duplicate licence.*—The fee for renewal of a licence under section 7 shall be the same as that laid down in rule 4 and the fee for issue of a duplicate licence under section 12 shall be Rs. 5.

9. *Renewal and issue of duplicates of licences.*—The conditions for renewal of a licence and issue of a duplicate licence shall be the same as those prescribed for grant of a licence. The duplicate licence shall be granted on getting an indemnity bond executed by the applicant indemnifying Government against any loss or damage which may be caused by any one using the licence lost by the applicant and shall bear on its face the number and date of the original licence in lieu of which it is issued and shall be stamped "duplicate".

10. *Publication of the grant, suspension and revocation of licences and list of warehousemen and their warehouses.*—The names and location of warehouses and the names and addresses of warehousemen licensed under the Act as on the 1st day of January every year shall be published in the *Bombay Government Gazette* before the 15th February of the same year. Subsequent suspension or revocation of the licences shall also be published in the *Bombay Government Gazette.*

III. Deposit and maintenance of goods, etc.

11. *Application for deposit and delivery of goods to warehouseman.*—The application for deposit of goods shall be made to a warehouseman in Form No. 4 and the application for delivery of goods shall be made in Form No. 5.

12. *Receipts.*—Receipts shall be in Form No. 6 and shall specify the following particulars :—

(*i*) The period for which the goods are accepted for storage,

(*ii*) Particulars showing the ownership of, and liens, mortgages or other encumbrances on, the goods covered by the receipt.

(*iii*) The grade, class or quality of goods.

13. *Information regarding persons authorised to sign receipts.*—Every warehouseman shall file in the office of the prescribed authority information regarding the names and addresses of persons with their signatures authorised to sign receipts on behalf of the warehouseman and shall as soon as possible inform the prescribed authority in case such persons are changed. If new persons are authorised information in respect of them shall also, be supplied.

14. *Non-negotiable receipts.*—Every warehouseman who issues a non-negotiable receipt shall cause to be marked upon it the words "Not Negotiable".

15. *Issue of duplicate receipts.*—(1) An application for grant of a duplicate receipt, if the original is lost or destroyed, shall be made by the depositor to the warehouseman and shall be accompanied by (*a*) an affidavit showing that the applicant is lawfully entitled to the possession of the original receipt, that he has not negotiated or assigned it, the circumstances in which the original receipt was lost or destroyed, and if lost, that diligent efforts had been made to find the receipt without success, (*b*) a bond for an amount double the value of the goods represented by the original receipt, and (*c*) a sum of rupees five.

(2) On receipt of the application, the fact that the receipt is lost or destroyed shall be notified by the warehouseman once at least in local newspapers giving one week's clear notice of the issue of a duplicate thereof.

(3) After the expiry of the period referred to in sub-rule (2) a duplicate receipt shall be issued by the warehouseman. Such duplicate receipt shall be stamped "Duplicate".

(4) After duplicate receipts have been issued, the original receipts, if produced, will not be acted upon.

16. *Depositor to supply information regarding transfer of receipts.*—Every depositor shall be bound to supply copies under his signature of any endorsement regarding transfer, mortgage or encumbrance of goods as may be recorded on the warehouse receipt within 48 hours from making such endorsement.

17. *Charges to be made by warehousemen.*—No warehouseman hall levy or recover charges for his services in excess of the schedule of charges filed by him along with his application for licence and approved by the prescribed authority from time to time.

18. *Maintenance of a warehouse.*—Every warehouseman shall keep his warehouse in the following condition :—

(1) The warehouse shall be damp-proof, bird-proof and rat-proof ;

(2) The warehouse shall be repaired whenever necessary and shall be kept disinfected ;

(3) The goods stored in the warehouse shal be arranged and stored in such a manner as to render stock-taking and verification easy and effective ;

(4) Stacks shall not be constructed touching the walls and a space of about 2 feet shall be left round each stack ;

(5) The stacks shall not ordinarily exceed 15′×15′ in dimensions and shall not be more than 15 bags in height ;

(6) The container and the contents of each container shall be ordinarily uniform and shall be as advised by the prescribed authority from time to time ;

(7) All goods received for storage in the warehouse shall be measured in cubic feet (length, breadth and height) or weighed, as the case may be and such weight or measure shall be taken by a licensed weigher and such weight or measure shall be duly stencilled on each container or labelled on each stack showing the date and quant ty of weight or measure ;

(8) The container or the stack shall bear the name of the depositor together with the distinctive mark, if any, in bold letters ;

(9) Goods of different classes or grades or qualities shall be stored separately ;

(10) A l leakages in roof, dampness in walls and floors during the monsoons shall be carefully watched and repaired in good time ;

(11) A l appliances in the warehouse, such as scales, weights, measures, pokers and ladders shall be maintained correctly and in good condition ;

(12) Any other terms and conditions fixed and communicated by the prescribed authority from time to time shall be attended to or complied with.

19. *Precaution against injury to goods.*—Every warehouseman shall keep the goods stored in his warehouse reasonably clean at all times and free from straw, rubbish or accumulations of materials which may increase the risk of fire or interfere with the handling of the goods.

20. *Manner of insuring goods.*—Each warehouseman shall insure the goods stored in the warehouse in the following manner :—

(1) If so requested in writing by the depositor, the warehouseman shall keep such goods while in his custody as a warehouseman insured with the insurance company named by the depositor in his own name or that of the depositor and

to the extent as may be requested by the depositor, against loss or damage by fire, theft, riot or floods.

(2) In the absence of any directions from the depositor, the warehouseman shall insure the goods for an amount not less than the market value of the goods on the date on which they were deposited in the warehouse.

(3) The goods deposited in a warehouse shall not be insured with a company which is not on the list of companies approved for this purpose by the prescribed authority.

21. *Recovery of insurance charges.*—Every warehouseman shall be entitled to recover from the depositor of goods or its owner the insurance premia and other out of pocket expenditure incurred by him for insurance of goods stored in his warehouse.

22. *Classification of goods.*—(1) Every warehouseman shall keep the goods stored in his warehouse in an orderly manner so as to permit easy access to all lots and to facilitate inspecting, sampling, counting and identification of each lot.

(2) Whenever any quality, standard or grade of any of the goods stored in a warehouse is stated or is required to be stated for the purposes of the Act, it shall be in accordance with the quality, standards or grades, if any, determined for the particular goods by the prescribed authority from time to time.

23. *Notice of loss or damage to goods.*—If at the time of taking delivery of the goods deposited, the depositor finds that the goods are lost or damaged, he shall give a notice in writing with full particulars of the loss or damage within 72 hours of the delivery to the warehouseman. A copy of the notice shall also be sent to the prescribed authority. No claim against the warehouseman shall be valid if the notice of loss or damage has not been given by the depositor in time. Similar notice for claim for damages shall be given to the warehouseman by the depositor in case the depositor comes to know of the loss or damage while the goods are deposited in the warehouse.

24. *Part delivery of goods.*—If a warehouseman delivers part of the goods for which a negotiable receipt has been issued, he shall be bound to place plainly upon such receipt a statement of the goods or packages which have been so delivered. On his failure to make such statement the warehouseman shall be liable for failure to deliver all the goods specified in the receipt to any one who purchases the receipt in good faith and for valuable consideration whether the purchaser acquired title to the receipt before or after the delivery of any portion of the goods.

25. *Maintenance of books, records, etc.*—Every warehouseman shall maintain records and account books in respect of his business and shall for this purpose use forms, if any, enjoined by the prescribed authority. He shall, in particular maintain—

(1) a stock register in Form No. 7 ;

(2) a ledger for each depositor in Form No. 8 ;

(3) a general insurance account in Form No. 9.

26. *Shortage or excess in goods stored.*—(1) The warehouseman shall not be responsible for any shortage caused to goods stored in his warehouse by driage or other causes beyond his control.

(2) The warehouseman shall not be entitled to any excess caused to goods stored in his warehouse by absorption of moisture or other causes.

(3) In the event of any dispute arising as to whether the shortage or excess is due to driage or absorption of moisture or is due to other causes beyond the warehouseman's control the matter shall be referred to the prescribed authority whose decision shall be final and binding.

27. *Auction sale of goods deteriorating or about to deteriorate in a warehouse.*—Before effecting sale by public auction of goods stored in a warehouse which have deteriorated or are about to deteriorate, the warehouseman shall issue a notice indicating the date, time and place of auction at least a week before the date of auction. The notice shall be published in a local newspaper and shall also exhibited on the notice board of the local regulated market committee in case the warehouse is situated in a regulated market area. Copies of the notice shall also be sent to the prescribed authority and the Collector.

28. *Accounting of proceeds of auction sale.*—Every warehouseman shall be bound to render to the depositor correct accounts and tender to him payment of the sale proceeds of goods realised after the auction sale after deducting all charges legally due to him including all reasonable charges for the removal of goods and sale by public auction within a period not exceeding fifteen days from the date of such sale. He shall be bound to make actual payment of net proceeds of the sale to the depositor on surrender by him of the receipt duly discharged and on payment of all charges due to the warehouseman.

29. *Removal or transfer of goods by warehouseman.*—No warehouseman shall remove any goods stored in the warehouse or transfer them to another warehouse without first obtaining the receipt in respect thereof, cancelling the same and issuing a new receipt.

IV. Weighers, Samplers and Classifiers.

30. *Application for licences by weighers, samplers and classifiers.*—(1) Applications for taking out licences as weighers, samplers or classifiers shall be accompanied by a fee of Rs. 5 and shall be made in writing to the prescribed authority which shall after making such enquiries as may be considered necessary for the efficient working of the warehouse grant the licence applied for, on execution of an agreement by the applicant in such form as may be determined by the prescribed authority agreeing to conform with the rules and subject to the following conditions :—

(*i*) Every weigher, sampler or classifier licensed under section 23 of the Act shall keep books in such forms and render such prescribed returns and at such time and in such forms as the prescribed authority may from time to time direct.

(*ii*) Every weigher, sampler or classifier shall possess such epuipment as may be laid down by the prescribed authority.

(*iii*) Every licensed weigher, sampler or classifier when plying his trade, shall wear a distinguishing badge or a suitable pattern provided by the prescribed authority. A deposit of not less than one and not more than five rupees to cover the cost of the badge shall be paid by such weigher, sampler or classifier to the prescribed authority.

(*iv*) No licensed weigher, sampler or classifier shall recover charges exceeding the rates laid down by the prescriber authority from time to time.

(*v*) No licensed weigher, sampler or classifier shall enter in the service of another person or do business other than that for which he holds a licence or licences.

(*vi*) Such other conditions as may be laid down by the prescribed authority from time to time.

(*vii*) The licence shall be liable to be suspended or cancelled for breach of any of the provisions of these rules or the conditions of the licence.

(2) Notwithstanding anything contained in sub-rule (1), the prescribed authority may refuse to grant a licence to any person who, in his opinion, is not solvent or whose operations are not likely to further the efficient working of a warehouse.

31. *Period of licences granted to weighers, samplers and classifiers.*—A licence issued to a weigher, sampler or classifier shall remain in force from the date on which it is granted till the 31st December following.

32. *Certificates to be issued by weighers, sumplers and classifiers.*—The certificates to be issued by weighers, samplers or classifiers shall be in Form No. 10.

33. *Renewal of licences of weighers, samplers and classifiers.*—Applications for renewal of licences issued to weighers, samplers and classifiers shall be made at least one month prior to the termination of the licences and shall be accompanied by a fee of Rs. 5. The conditions for renewal of a licence shall be the same as those on which a new licence is issued.

34. *Issue of duplicate licences to weighers, samplers and classifiers.*—If the original licence is lost or destroyed, a duplicate thereof shall be issued on payment of a fee of Rs. 5. Such duplicate licence shall be stamped "Duplicate".

35. *Suspension or revocation of licences of weighers, samplers and classifiers.*—The prescribed authority may, for reasons to be recorded in writing, suspend or revoke the licence granted to any weigher, sampler or classifier if he contravenes any of the conditions of the licence or of these rules of if in the opinion of the prescribed authority his continuance as a licence is likely to be detrimental to the working of the warehouse.

36. *Appointment of Board of Arbitrators.*—On receipt of a written complaint against a weigher, sampler or classifier relating to weight, quality or grade of the goods stored in a warehouse, the prescribed authority shall issue notices to either party to the dispute calling upon them to nominate an arbitrator each on their behalf within a period not exceeding 15 days from the date of the notice. If either of them fail to nominate an arbitrator within the period of notice, the prescribed authority shall nominate the arbitrator on their behalf. He shall also nominate a third arbitrator on his behalf who shall act as the Chairman of the Board of Arbitrators.

37. *Procedure of Foard of Arbitrators and mode of executing awards.*—In the conduct of proceedings before them the Board of Arbitrators shall, as far as possible, follow the procedure prescribed in the Indian Arbitration Act, 1940. Every award passed by the Board shall, if not carried out, be executed on a certificate signed by the Chairman of the Board in the same manner as a decree of a Civil Court.

38. *When warehouseman may determine weight, grade or class of goods.*—In areas where there are no weighers, classifiers or samplers licensed under the Act, the weight, grade, class or quality of the goods covered by a receipt shall be as determined by the warehouseman.

V. Miscellaneous.

39. *Return of licences.*—When a licence granted under the Act expires, or when it is suspended or revoked by the prescribed authority, it shall be returned to that authority within seven days of such termination, suspension or revocation.

40. *Manner of giving notices.*—(1) The notice to be given for revocation of a licence under sub-section (*1*) of section 9 shall be for a period of not less than a week and shall be sent by registered post. If the warehouseman does not show cause within the time specified in the notice, the prescribed authority shall decide the matter *ex parte*.

(2) The notice to be given to the depositor under sub-section (*1*) of section 16 shall be for a period of not less than a week and shall be sent by registered post. Such notice shall be served on all persons who hold interest in the goods as may be known to the warehouseman on the date of issuing the notice.

41. *Dissolution of partnership firm holding licence.*—Where a licence is held by a partnership firm and such partnership is subsequently dissolved, every partner of the firm shall send a report of the dissolution to the prescribed authority within a week of the dissolution.

42. *Use of standard weights and measures by warehouseman.*—Every warehouseman shall use only such scales, weights and measures and weighing or measuring machines as are duly certified to be correct for the purpose by an inspector appointed under the Bombay Weights and Measures Act, 1932.

43. *Hours of business of warehouses.*—Every warehouse shall be made available for transacting warehouse business as may be necessary for at least 8 hours a day between the hours of 7 a.m. to 7 p.m. The actual hours when business can be transacted shall be conspicuously exhibited at each warehouse.

44. *Supply of reports by warehousemen.*—Every warehouseman shall, from time to time, make such reports as may be required by the prescribed authority concerning the condition and contents of the warehouse and operation of his business as a warehouseman.

FORM NO. 1 (IN REGIONAL LANGUAGE).

(*See* rule 3.)

Application for grant/renewal of licence to the Prescribed Authority.

To

The Assistant Registrar of Co-operative Societies, ...

Sir,

I/We residing at taluka district request that I/we may be granted licence as license No. granted a warehouseman to me/us for the storage of goods during may be renewed for the year ending the 31st December 19 .

2. I/We agree to abide by the terms and conditions of the licence which may be granted/renewed.

*Cash or Treasury chalan.

3. I/We have affixed * stamp in payment of the licence fee of Rs.

4. I/We undertake to execute the security bond of the required amount and in the manner prescribed under rule 8 of the Bombay Warehouses Rules, 1949.

5. I/We have filed along with this application a schedule of charges that would be recoverable from the depositors of goods stored in the warehouse.

6. I/We agree to abide by the provisions of the Bombay Warehouses Act, 1947, the Bombay Warehouses Rules, 1949, and also the terms and conditions regarding the maintainance of a warehouse, etc., and any other administrative or other orders issued in regard to the business by the Prescribed Authority or such other officer as may be authorised by him in this behalf.

7. I/We enclose herewith a solvency certificate to the extent of Rs.

8. I/We hereby solemnly declare that all information herein given is true to the best of my/our knowledge and that in case it proves to be untrue, I/we undertake to indemnify person or persons concerned in this business against any loss arising out of such false or untrue information.

9. I/We declare that each of the warehouses specified below is suitable for the storage of goods respectively mentioned against it and that it is in good condition.

Signature(s)

Description of premises to be used as a warehouse/warehouses

Date :

1. **Village or town** District

2. **House No.**

3. Description of the warehouse and of the rooms for storage.	Distinguishing letter or number or letter and number of each.	Detailed description of each.¶	Purpose of each.

4. **Carpet area and storage capacity** ...

5. **Suitability regarding storage of goods for which it is to be used** ... ...

6. **Quantities of variety of goods stored in the previous year, if any** ...

7. Estimated quantity of goods to be stored during the period of licence ...

FORM NO. 2.

(*See* rule 3.)

Application for issue of duplicate licence to the prescribed authority.

To

The Assistant Registrar of Co-operative Societies,.....

Sir,

I/We residing at district request
taluka warehouse licence
that my/our granted on
No. for the area has been lost
for the period ending
destroyed in the following circumstances :—

(Here mention the circumstances under which the licence was lost or destroyed.)

2. I/We therefore request you to grant me/us a duplicate licence on the same terms and conditions on which the aforesaid licence was granted.

3. I/We have affixed stamp in payment of the fee of Rs. 5.

4. I/We hereby solemnly declare that the information herein given is true to the best of my/our knowledge.

Witness 1

Witness 2

Date Signature.

FORM No. 3.

(*See* rule 7.)

Form of Security Bond.

Whereas I/we resident of taluka district have applied for grant of a licence as warehouseman at under the Bombay Warehouses Act, 1947 (Bom. LVI of 1947) subject to such conditions as may be laid down by the prescribed authority, I/we furnish herewith security deposit of Rs. in cash/gilt-edged securities in accordance with the rates prescribed in rule 8 of the Bombay Warehouses Rules, 1949, for the observance of conditions and obligations arising out of my/our business as warehouseman and agree that the amount of the security deposited by me/us under this bond shall be liable to be forfeited by Government in case of default of any of the conditions of the licence or breach of any of the provisions of the Act or the Rules and that the amount due under this bond shall be recoverable from me/us or my/our heirs or legal representatives as arrears of land revenue.

Signature of Warehouseman.

Signatures of Witnesses.

Suretyship bond by endorsement.

We and of are sureties for the said and do hereby agree that in the event of the said making default in observance of the conditions and obligations arising out of his business as warehouseman, the amount of security due under the said bond shall be recoverable by Government from us or our heirs or legal representatives jointly and severally.

Dated this day of

(Signatures of Sureties).

(Signatures of Witnesses).

Request for deposit of goods.

FORM No. 4.

(*See* rule 11.)

Application for Deposit of Goods.

To

_____, The Warehouseman.

Dear Sir,

Please take delivery of the following goods :—

Description of the goods.	No. of packages, bags and quantities with distinguishing marks, if any.	Measurement or/and weight.	Market price at.....	Total Valuation of goods.	Remarks, if any.

I certify that the goods abovementioned are my *bona fide* property and no other person has any claim against them.

(When an agent deposits the goods on behalf of a principal, the form should be as under.)

I certify that the goods abovementioned are the *bona fide* property of..... and no other person has any claim against them.

Yours faithfully,

Depositor/Agent.

Certified that the written description of goods, their grade or quantity and weights and/or measurements and price have been verified by me and are correct.

Place Date

Warehouseman's signature.

FORM No. 5.

(*See* rule 11.)

Delivery Order.

To

The....., Warehouseman.

Dear Sir,

Please deliver the goods described below to self or to..... These goods were deposited with you on..... The deposit receipt granted by you accompanies.

Description of goods to be delivered.

Description of goods.	Number of packages etc.	Weight or/and measurement.	Market price.	Special marks, if any.	Remarks.
1	2	3	4	5	6

Yours faithfully,

Depositor.

Received the abovenoted goods in.....condition.

Place. Date

Depositor.

FORM No. 6.

(*See* rule 12.)

Negotiable/Not Negotiable.

Warehouse Receipt (in regional language).

Serial No. of Receipt
Location and No. of warehouse
Warehouseman's licence No.
Valid up to
Date of issue of receipt
Received from goods of the following description :—

Kind.	Class or standard quality and/or grade.	Number of packages or lots.	Net quantity in maunds by weight or measure.	Name and/or licence No. of the Weigher/ Classifier/ Sampler.

Condition of the goods (1) Good. (2) Fair. (3) Average.

Private marks of the depositor on the packages.

Rate of storing and other charges.

Insured for Fire. Theft Riots Others with (name of Insurance Co.) for the amount of Rs.

The goods are accepted for storage from to

Date

Signature of the Werehouseman or his Agent.

The goods mentioned below are hereby released from this receipt for delivery from warehouse. Any unreleased balance of the goods is subject to a lien for unpaid charges and advances on the released portion.

Date.	Quantity released.	Signature.	Quantity due on receipt.

Conditions for storage :—

1. *Tender for storage.*—(*a*) All goods for storage shall be delivered at the warehouse properly marked and packed for handling. The depositor shall furnish at or prior to such delivery manifest showing marks, brands or sizes to be kept and accounted for separately and the class of storage desired ; otherwise the goods may be stored in bulk or assorted lots at the discretion of the warehouseman and will be charged for accordingly.

(*b*) The word " lot " as used herein means the unit or units of goods for which a separate account is to be kept by the warehouseman. Delivery of all or any units of a lot shall be made without subsequent sorting except by special arrangement and subject to a charge.

(*c*) The warehouseman undertakes to store and deliver goods only in the packages in which they are originally received, *unless otherwise provided.*

2. *Storage period.*—(*a*) All goods are stored on a month to month basis, unless otherwise provided. A storage month shall extend from a date in one calendar month to, but not including, the same date of the next and all succeeding calendar months, but if there is no corresponding date in the next succeeding calendar month, it shall extend to and include the last day of that month. When the last day of the final storage month falls on Sunday or a legal holiday, the storage month shall be deemed to expire on the next succeeding business day. All charges including storage and insurance charges shall be on a month to month basis unless otherwise provided.

(*b*) (*i*) Where goods are of perishable nature or by keeping will deteriorate greatly in value or injure other property, the warehouseman may give such notice as is reasonable and possible under the circumstances to the holder of the receipt for the goods if the name and address of the holder is known to the warehouseman or if not known to him, then to the depositor, requiring him to satisfy the lien upon the goods and to remove them from the warehouse and on the failure of such person to satisfy the lien and remove the goods within the time prescribed in the notice, the warehouseman may sell the goods at public sale.

(*ii*) If the warehouseman after a reasonable effort is unable to sell the goods, he may dispose of them in any manner he may think fit, and shall incur no liability by reason thereof.

(*iii*) The warehouseman shall from the proceeds of any sale made pursuant to this section satisfy his lien and shall hold the balance in trust for the holder of the receipt.

FORM No. 8.

(*See* rule 25.)

Depositor's Ledger.

Deposit No.
Name of the Depositor
Address of the depositor
Names of operators or transferees
Reference to specimen signature card

Godown No.
Where stored
Godown registration No.

Date of deposit.	Expenses of stacking or cleansing and charges of safe custody.	Goods Receipt No.	Description of goods received.		
			No. of packages or bags or quantity (special mark on goods, if any). (*a*)	Weight or/and measurement. (*b*)	Grade or quality standard. (*c*)
1	2	3	4		

Name of the Co.
Particulars of Insurance
No. of Policies

Amount Period Date of expiry

Description of goods released or delivered.			Particulars of Payment made by depositor.		Delivery Order No.	Initials of godown-keeper
No. of packages or bags or quantity. (*a*)	Weight or/and measurement. (*b*)	Grade or quality standard. (*c*)	Date of payment. (*a*)	Amount (*b*)		
5			6		7	8

Balance of stock.			Market price of goods deposited on the date of deposit.	Name of transferee to whom goods are transferred or by whom they are held as security, for advances, if any.	Reference to the instrument or document transferring possession.	Remarks.
No. of packages. (*a*)	Weight or/and measurement. (*b*)	Grade or quality standard. (*c*)				
9			10	11	12	13

FORM No. 9.

(*See* rule 25.)

General Insurance Account.

Name of Depositor.	Warehouse receipt No.	Value of goods.	Amount for which insured.	Period for which insured.
1	2	3	4	5

Name of Insurance Company with which insured.	No. of Insurance Policy.	Amount of insurance charge (*a*).	Amount of out of pocket expenses.	Remarks.
6	7	8	9	10

Date

Signature of Warehouseman

FORM No. 10.

(*See* rule 32.)

Form of Certificate to be Issued by the Weigher, Sampler or Classifier.

Bombay Warehouses Act.

Weight/grade certificate .. .. ..
Name and location of the warehouse in which the grain or produce is to be stored ..
Date of certificate .. .. ..
Consecutive number of the certificate ..
Weight of grain or produce covered by the certificate .. ..
Kind of grain or produce covered by the certificate .. .. ..
Grade and/or weight of grain or produce as determined by licensed weigher, sampler or classifier .. ..

This certificate is issued under the Bombay Warehouses Act, 1947, and the rules made thereunder.

Signature of the licensed weigher, sampler or classifier.

THE BOMBAY RENTS, HOTEL AND LODGING HOUSE RATES CONTROL ACT, 1947 (BOM. LVII OF 1947).

G. N., H. & L. G. D., No. 5975/33, dated 12th May 1948 (B. G., Pt. I, p. 2184-A). S. 15

Amended by G. N., H. & L. G. D., No. 5975/33, dated 24th September 1948.
Amended by G. N., H. & L. G. D., No. 5975/33, dated 6th April 1949.

In exercise of the powers conferred by section 15 of the Bombay Rents, Hotel and Lodging House Rates Control Act, 1947 (Bom. LVII of 1947), as amended by the Bombay Rents, Hotel and Lodging House Rates Control (Amendment) Act, 1948 (Bom. XXXVI of 1948), the Government of Bombay is pleased to permit in all areas to which Part II of the said Act extends, all transfers and assignments by lessees of their interests in leasehold premises as and to the extent specified in the Schedule hereto.

Schedule.

(1) Transfer or assignment on (*i*) gift, (*ii*) sale or (*iii*) mortgage without possession by lessees holding building sites under leases the unexpired period of which exceeds 5 years on the date of this Notification provided such transfer is of their entire interest in the building site together with the whole building standing thereon.

(2) Transfer or assignment incidental to the sale of a business as a going concern together with the stock-in-trade and the good-will thereof, provided that the transfer or assignment is of the entire interest of the transferor or assignor in such lease-hold premises together with the business and the stock-in-trade and good-will thereof.

(3) Reconveyance of mortgaged property where such property comprises of a building site held under a lease together with the whole building standing thereon.

(4) Transfer or assignment of trust-property without consideration from one trustee to another trustee or from a trustee to a beneficiary where such property comprises of a building site held under a lease together with the whole building standing thereon.

G. N., H. & L. G. D., No. 5941/33, dated 17th May 1948 (B. G., Pt. IV-B, p. 266). S. 49 Bombay Rents, Hotel and Lodging House Rates Control Rules, 1948.

In exercise of the powers conferred by section 49 of the Bombay Rents, Hotel and Lodging House Rates Control Act, 1947 (Bom. LVII of 1947), the Government of Bombay is pleased to make the following rules, namely:—

THE BOMBAY RENTS, HOTEL AND LODGING HOUSE RATES CONTROL RULES, 1948.

CHAPTER I.

Preliminary.

1. *Title.*—These rules may be called the Bombay Rents, Hotel and Lodging House Rates Control Rules, 1948.

2. *Definitions.*—In these rules, unless there is anything repugnant in the subject context,

(*a*) "Code" means the Code of Civil Procedure, 1908;

(*b*) "miscellaneous application" means an application for fixing the standard rent, except where the said relief is claimed in a pending suit or proceeding, an application for determining the permitted increases, an application by a tenant for reinstatement, an application for a direction for the restoration of any essential supply or service or an application by a member of the tenant's family under sub-clause (*c*) of clause (*11*) of section 5;

(c) words and expressions not defined in these rules shall have the same meanings as are assigned to them in the Bombay Rents, Hotel and Lodging House Rates Control Act, 1947.

CHAPTER II.

Receipt for rent.

3. *Receipt for rent.*—A receipt given under section 26 for the amount of rent received in respect of any premises shall be in Form I.

CHAPTER III.

Payment of rent according to British calendar.

4. *Calculation of rent according to British calendar.*—If, before the Act comes into force, the rent in respect of any premises was chargeable according to a calendar other than the British calendar, the landlord shall recover from the tenant rent for the broken period of the month, year or portion of the year immediately preceding the date on which the Act comes into force, proportionate amount according to the aforesaid calendar month, year or portion of the year at which the rent was then chargeable. After such date the landlord shall recover rent according to the British calendar. The rent chargeable per month according to the British calendar shall not exceed the rent which was chargeable per month according to the other calendar followed immediately before such date.

CHAPTER IV.

Procedure for suits, proceedings, appeals, etc., in Greater Bombay.

5. *Procedure for suits the value of the subject-matter of which does not exceed Rs. 2,000 and for proceedings for execution of decrees and orders passed therein and for distress warrants.*—In such of the following suits and proceedings as are cognizable by the Court of Small Causes, Bombay, on the date of the coming into force of these Rules, namely :—

(1) suits relating to the recovery of rents or charges for boarding, lodging or other service provided in a hotel or a lodging house when the amount or value of the subject-matter does not exceed Rs. 2,000,

(2) proceedings under Chapters VII and VIII of the Presidency Small Cause Courts Act, 1882, and

(3) proceedings for execution of any decree or order passed in any such suit or proceeding,

the Court of Small Causes, Bombay, shall follow the practice and procedure provided for the time being (a) in the said Act, except Chapter VI thereof, and (b) in the rules made under section 9 of the said Act.

6. *Affidavits in distress warrant applications.*—Every application for a distress warrant under Chapter VIII of the Presidency Small Cause Courts Act, 1882, shall be accompanied also by an affidavit of the applicant or his duly constituted agent stating that the amount claimed is not in excess of the rent recoverable under the Act.

7. *Procedure in applications for fixing standard rent, etc.*—In miscellaneous applications the Court of Small Causes, Bombay, shall follow, as far as may be and with the necesary modification, practice and procedure applicable to suits referred to in rule 5 as if such applications were suits for sums not exceeding Rs. 1,000 :

Provided that costs in respect of employing a legal practitioner when allowed in any such application shall be not more than Rs. 15.

8. *Procedure for other suits.*—In suits and proceedings other than those referred to in rules 5 and 7, the Court of Small Causes, Bombay, shall, as far as may be and with the necessary modifications, follow the procedure prescribed for a court of first instance by the Code:

Provided that costs in respect of employing a legal practitioner when allowed shall be, in respect of any legal practitioner entitled to appear, not more than Rs. 45 *per diem* of 5 hours of actual hearing or Rs. 85 if the case is disposed of on the first day.

9. *Procedure in appeals.*—(1) In appeals under section 29 (*1*) (*a*) of the Act the Court shall, as far as may be and with the necessary modifications, follow the practice and procedure prescribed for appeals from original decrees by the Code.

(2) If, in any such appeal, the judges constituting the bench differ, the Chief Judge, if he is one of the judges, or, in his absence, the judge first in rank and precedence shall have the casting voice.

(3) The costs in respect of employing a legal practitioner when allowed shall be on the following scale in respect of any legal practitioner entitled to appear:—

(*a*) In an appeal from an order in a miscellaneous application.	Not more than Rs. 30.
(*b*) In an appesl from a decree or order in a suit or proceeding.	According to the scale applicable for an original suit or proceeding.

CHAPTER V.

Procedure for suits, proceedings, appeals, etc., outside Greater Bombay.

10. *Procedure for suits the value of the subject-matter of which does not exceed Rs. 500 and for proceeding for execution of decrees and orders passed therein.*—In such of the following suits and proceedings as are cognizable on the date of the coming into force of these Rules by a court invested with the jurisdiction of a Court of Small Causes under the Provincial Small Cause Courts Act, 1887, namely:—

(1) suits relating to recovery of rent or charges for boarding, lodging or other service provided in a hotel or lodging house or recovery of possession of any premises, when the amount or value of the subject-matter does not exceed Rs. 500, and

(2) proceedings for execution of any decree or order passed in any such suit or proceeding,

the court of Civil Judge (Junior Division or Senior Division) shall follow, as far as may be and with the necessary modifications, the procedure prescribed in the Code to be followed by the courts invested with the jurisdiction of a Court of Small Causes under the Provincial Small Cause Courts Act, 1887.

11. *Procedure in applications for fixing standard rents, etc.*—In miscellaneous applications the court of Civil Judge (Junior Division or Senior Division) shall follow, as far as may be and with the necessary modifications, the procedure applicable to suits referred to in rule 10 as if such applications were suits of the description referred to therein.

12. *Procedure for other suits and proceedings.*—In suits and proceedings other than those referred to in rules 10 and 11, the court of Civil Judge (Junior Division or Senior Division) shall follow, as far as may be and with the necessary modifications the procedure prescribed for a court of first instance by the Code.

13. *Procedure in appeals.*—In an appeal under section 29 (*1*) (*b*) of the Act from a decree or order made by the court of Civil Judge (Junior Division or Senior Division) the District Court shall, as far as may be and with the necessary modifications, follow the practice and procedure prescribed for appeals from original decrees by the Code.

CHAPTER VI.

Court Fees.

14. *Court fees to be levied in Greater Bombay.*—(1) The court fees leviable in suits and proceedings mentioned in rule 5 shall be the fees for the time being chargeable in the Court of Small Causes under the Presidency Small Cause Courts Act, 1882.

(2) The court fees leviable in miscellaneous applications mentioned in rule 7 shall be eight annas and the court fees leviable in appeals against orders passed in such applications shall be one rupee.

(3) The court fees leviable in suits and proceedings mentioned in rule 8 and in all appeals filed under section 29 (*1*) (*a*) of the Act in the Court of Small Causes, Bombay, shall be the court fees chargeable for the time being for such suits and appeals instituted in the courts other than the High Court and the Court of Small Causes, Bombay, under Chapter III of the Court-fees Act, 1870, and the provisions of that Act, as far as may be and with the necessary modifications, shall apply to the recovery of the said court fees.

(4) Whenever any suit or proceeding mentioned in rule 5 or 8 is settled by agreement of the parties before the hearing half the amount of the court fees paid in respect of the plaint or application by which the suit or proceeding was instituted shall be repaid by the Court of Small Causes, Bombay, to the parties by whom the same have been paid.

15. *Court fees in courts outside Greater Bombay.*—(1) The court fees leviable in miscellaneous applications in courts outside Greater Bombay shall be eight annas and in appeals against orders passed in such miscellaneous applications shall be one rupee.

(2) In suits, appeals and other proceedings in courts outside Greater Bombay the Court fees leviable shall be the same as are chargeable under Chapter III of the Court-fees Act, 1870, and the provisions of that Act shall apply to the recovery of such court fees.

(3) Whenever any suit or proceeding in any court outside Greater Bombay is settled by agreement of the parties before the hearing, half the amount of the court fees paid in respect of the plaint or application by which the suit or proceeding was instituted shall be repaid by the court to the parties by whom the same have been paid.

CHAPTER VII.

General.

16. *The provisions of the Code to be generally followed.*—In deciding any question relating to procedure not specifically provided for by these Rules the court shall, as far as possible, be guided by the provisions contained in the Code.

CHAPTER VIII.

Inquiries before the Controller.

17. *Commencement of inquiry by Controller.*—The Controller may start the inquiry under Part III of the Act for fixing the fair rate under section 33 or revision thereof under section 34, or for fixing the number of lodgers to be accommodated in each room or specified accommodation in any hotel or loding house under section 33 situate within his jurisdiction either *suo motu* or on an application made to him in writing signed by the person making it and delivered to the Controller either in person or sent to his office-address by registered post.

18. *Register of inquiries.*—Every such inquiry made by the Controller or inquiry in connection with the issue of a certificate under section 39 shall bear a separate number and each such inquiry shall be entered in a separate register which shall be maintained in Form 2.

19. *Procedure for applications to Controller.*—An application for the revision of fair rates when made by the manager of a hotel or owner of a lodging house or for a certificate against a lodger shall be in writing signed by the manager or proprietor of the hotel or lodging house and delivered to the Controller either in person or sent to his office address by registered post.

20. *Contents of application to Controller.*—The application for the revision of the fair rates shall state the material grounds on which the revision is sought and the application for a certificate shall state the name, description and postal address of the lodger against whom the certificate is sought as also the grounds for the same and a brief statement of the material facts in support thereof.

21. *Procedure for fixing fair rates or for revising them or for fixing the number of lodgers.*—(1) Before fixing the fair rates or revising them or fixing the number of lodgers the Controller shall receive and consider such oral and documentary evidence as the applicant, if any, and the manager of a hotel or owner of a lodging house may lead.

(2) The Controller shall, as far as practicable, make such inquiries as he deems necessary from other lodgers in the hotel or lodging house.

22. *Procedure for certificate against lodgers.*—Before making an order granting or refusing to issue a certificate against a lodger the Controller shall receive and consider such evidence as the lodger and the manager of a hotel or owner of a lodging house may lead.

23. *Manner of recording oral evidence.*—The Controller shall make a short memorandum of the substance of the oral evidence recorded by him.

24. *Forms and manner of service of summonses.*—A summons issued to a witness (*a*) for giving evidence shall be in Form 3 and (*b*) for production of documents shall be in Form 4. The summons shall be served by registered post.

25. *Contents of the order of Controller.*—The final order passed by the Controller in an inquiry under the Act shall state in brief the reasons in support of the order made. The order shall be signed by the Controller and shall bear the date on which it was passed.

26. *Copies of the order to be sent to parties.*—A copy of the order passed shall be sent by registered post to the parties concerned. A copy of the order fixing the fair rates or revision thereof or for fixing the number of lodgers shall also be sent to the police station within whose jurisdiction the hotel or lodging house to which the order relates is situate.

27. *Certificate to be sent to the Manager.*—The certificate issued under section 39 shall be sent to the manager of the hotel or owner of the lodging house concerned and a copy thereof to the lodger concerned by registered post. An office copy of the certificate shall be kept in the record of the inquiry.

FORM No. 1.

(*See* rule 3.)

Form of Rent Receipt and Counterfoil.

Counterfoil. Serial No.

Name of the landlord :—
Address of the landlord :—

Received with thanks from Mr./Mrs./Miss
a sum of Rs. (in figures) (in words)
only as payment of rent at Rs. per for
the period for the premises
this day the day of the month of in the year

Signature or thumb impression of the landlord.

---

* The rent charged includes :—
(1) Rates, cesses and taxes of the local authority.
†(2) Electric charges.
†(3) Gas charges.
†(4) .....
†(5) .....
* It does not include :—
(1) Rates, cesses and taxes of the local authority.
(2) Electric charges.
(3) Gas charges.
(4) .....
(5) .....

* Strike out whatever is inapplicable.
† State the exact charges if possible.

Rent Receipt. Serial No.

Name of the landlord :—
Address of the landlord :—

Received with thanks from Mr./Mrs./Miss
a sum of Rs. (in figures) (in words)
only as payment of rent at Rs. per for
the period for the premises
this day the day of the month of in the year

Signature or thumb impression of the landlord.

---

* The rent charged includes :—
(1) Rates, cesses and taxes of the local authority.
†(2) Electric charges.
†(3) Gas charges.
†(4) .....
†(5) .....
* It does not include :—
(1) Rates, cesses and taxes of the local authority.
(2) Electric charges.
(3) Gas charges.
(4) .....
(5) .....

* Strike out whatever is inapplicable.
† State the exact charges if possible.

FORM No. 2.

(*See* rule 18.)

Form of the Register to be maintained by the Controller.

Serial No.	Names of the Parties and Hotel or Lodging House.	Date of the receipt of the application.	Nature of the application.	Date of decision.	How it was decided.

FORM No. 3.

(*See* rule 24.)

IN THE OFFICE OF THE CONTROLLER FOR HOTELS AND LODGING HOUSES.

Summons to attend and give evidence.

Inquiry No. of 19

Applicant;

versus

Opponent.

To

YOU are hereby summoned to appear in this office in person on the day of 19 at o'clock and from day to day until your attendance is dispensed with by the

Controller, to give evidence in the above mentioned inquiry and to produce

and you are not to depart thence until you have been examined (or have produced the Document) or unless you have obtained the leave of the Controller.

Given this

day of 19

If you fail to attend without lawful excuse, you will be subject to the consequences of non-attendance laid down in rule 12 of Order XVI of the Code of Civil Procedure, 1908.

Controller.

FORM No. 4.

(*See* rule 24.)

IN THE OFFICE OF THE CONTROLLER FOR HOTELS AND LODGING HOUSES.

Summons to produce documents.

Inquiry No. of 19

Applicant :

versus

Opponent.

To

YOU are hereby required to produce at the above Inquiry on the day of 19 , at o'clock and from day to day until your attendance is dispensed with by the Controller :—

Dated this day of 19

Controller.

THE BOMBAY PRIMARY EDUCATION ACT, 1947 (BOM. LXI OF 1947).

G. N., E. & I. D., No. 7896 (F), dated 22nd March 1949 (B. G., Pt. IV-B, p. 743). S. 2 (15)

In exercise of the powers conferred by clause (15) of section 2 of the Bombay Primary Education Act, 1947 (Bom. LXI of 1947) (hereinafter referred to as the said Act), the Government of Bombay is pleased to determine that the subjects prescribed or sanctioned for study in primary schools under section 17 of the Bombay Primary Education Act, 1923, and in force therein immediately before the coming into force of the said Act shall be the subjects, and education imparted up to VII standard in primary schools under the Bombay Primary Education Act, 1923, shall be education up to such standard VII, for the purposes of the said clause (15).

G. N., E. & I. D., No. 7896(G), dated 22nd March 1949 (B. G., Pt. IV-B, p. 744). S. 38

In exercise of the powers conferred by section 38 of the Bombay Primary Education Act, 1947 (Bom. LXI of 1947) (hereinafter referred to as the said Act), the Government of Bombay is pleased to specify that the subjects, curricula, books and standards of teaching of approved schools and other primary schools maintained or aided by a local authority prescribed or sanctioned under section 17 of the Bombay Primary Education Act, 1923, and in force therein immediately before the coming into force of the said Act, shall be the subjects, curricula, books and standards of teaching of such approved and primary schools which are approved schools within the meaning of the said Act.

G. N., E. & I. D., No. 7896-B, dated 19th March 1949 (B. G., Pt. IV-B, p. 505). S. 63(1) & (2)

Bombay Primary Education Rules, 1949.

Amended by G. N., E. & I. D., No. S. 96, dated 4th June 1949.
Amended by G. N., E. & I. D., No. 7896, dated 18th June 1949.
Amended by G. N., E. & I. D., No. 7896, dated 31st October 1949.
Amended by G. N., E. & I. D., No. 96, dated 3rd November 1949.
Amended by G. N., E. & I. D., No. 7896, dated 8th November 1949.
Amended by G. N., E. D., No. 7896, dated 2nd March 1950.
Amended by G. N., E. D., No. 7896, dated 8th March 1950.
Amended by G. N., E. D., No. 7896, dated 10th March 1950.

In exercise of the powers conferred by sub-sections (*1*) and (*2*) of section 63 of the Bombay Primary Education Act, 1947 (Bom. LXI of 1947), and in supersession of the Bombay Primary Education Rules, 1924, the Government of Bombay is pleased to make the following rules, namely :—

CHAPTER I.

PRELIMINARY.

1. *Short title and commencement.*—(1) These rules may be called the Bombay Primary Education Rules, 1949.

(2) They shall come into force with effect from the 1st day of April 1949.

2. *Definition.*—In these rules, unless there is anything repugnant in the subject or context :—

(*a*) "Act" means the Bombay Primary Education Act, 1947.

(*b*) "Backward communities" mean the classes and communities mentioned under the heading Backward Communities in Schedule B.

(*c*) "Deputy Educational Inspectors" and "Assistant Deputy Educational Inspectors" mean Inspecting Officers appointed under section 48 of the Act for each district by Government or by an officer authorised by Government in this behalf.

(*d*) "District Building Committee" means such committee appointed by Government in each district.

(*e*) "Government" means the Government of Bombay.

(*f*) "Pension" means periodical payment of money made by the School Board to the employees of the District School Board or Authorised Municipality concerned during their life time on retirement of such employees from the service of such District School Board or Authorised Municipality in consideration of the employees' past service and includes gratuity.

(*g*) "Private school" means a primary school which is maintained by an agency other than Government or District School Board or Authorised Municipality and includes night schools and other schools under private management similar to those which were recognised under the Grant-in-aid Code.

(*h*) "Public School" means a primary school maintained by Government or District School Board or Authorised Municipality, as the case may be.

(*i*) "Regional language" means any one of the following languages, namely :—

Marathi, Gujarati or Kannada.

(*j*) "Schedule" means a schedule appended to these rules.

(*k*) "Trained teacher" means a teacher who holds a certificate of training granted by the Education Department of Government or such other certificate as may from time to time be recognised by Government in this behalf.

(*l*) Words and expressions used in the Act but not defined in these rules shall have the meanings assigned to them in the Act.

CHAPTER II.

School Boards.

A—Constitution of School Boards.

3. *Constitution of School Boards.*—Each School Board shall be constituted as shown in Schedule A.

4. *Minorities and Backward Communities.*—For the purposes of constitution of a School Board, minorities and backward communities shall mean the classes and communities specified in Schedule B.

5. *Educational qualifications, equivalent to and higher than primary school certificate examination, for membership.*—Educational qualifications equivalent to and higher than the primary school certificate examination for the membership of a school board shall be as follows :—

(*a*) Equivalent to the Primary School Certificate Examination :—

(i) Vernacular School Final examination held by the Educational Department of the Province of Bombay prior to the year 1939.

(ii) Examination at the end of Standard III and VI of an ordinary secondary and English teaching school respectively prior to 1st March 1949 and at the end of Standard VII of those schools thereafter.

(iii) Examination at the end of Standard VII of a European School as defined in the Code of Regulations for European Schools in the State of Bombay.

(*b*) Higher than the Primary School Certificate Examination :—

(i) Any examination higher than any of the examinations mentioned in clause (*a*) above.

(ii) Examinations of the Gujarat and Tilak Vidyapeeth corresponding to the Matriculation examination of a recognised University as notified by Government from time to time.

(iii) The training certificate examination for primary teachers of the Gujarat Vidyapeeth Adhyapan Mandir.

(iv) All examinations of the S. N. D. T. Women's University.

(v) The Bombay Secondary School Certificate Examination.

B—Election of School Board Members.

6. *Election of School Board Members.*—(1) As soon as possible, after the coming into force of the Act, every district local board and authorised municipality shall proceed to elect the members of the School Board.

(2) Whenever a new local board or authorised municipality has been constituted, it shall elect the members of the School Board as soon as possible.

(3) The members of the School Board shall be elected separately in the following order :—

(i) Women.

(ii) representatives of minorities. (If more than one minority is to be represented, the representative of each shall be elected separately.)

(iii) representatives of backward communities.

(iv) persons who have passed the Matriculation or second year training certificate examination.

(v) the remaining members of the School Board to be elected other than the representatives of non-authorised municipalities, if any.

(4) Representatives of non-authorised municipalities, if any, under proviso to section 4 (*5*) (*a*) of the Act shall be elected by the non-authorised municipalities concerned.

(5) The election of the members of the School Board under the preceding sub-rules shall be held in accordance with the procedure prescribed in *Schedule C*.

7. *Names of elected members to be reported.*—Immediately after the result of an election is declared under rule 16 of Schedule C the President of the district local board or the authorised municipality, as the case may be, shall communicate to the Collector of the District, the Educational Inspector and the Director the names of the persons elected as members of the School Board together with information in the form prescribed in Appendix A to these rules.

8. *Publication of names of Members of a School Board.*—The names of all the members of a School Board elected and appointed or nominated by the State Government shall be published in the official Gazette by Government.

9. *Filling up of a casual vacancy of a member of a School Board.*—(1) The vacancy of an elected member of a School Board due to any cause shall be forthwith reported by the Chairman of the School Board to the President of the District Local Board or the authorised municipality. The President concerned shall take steps to fill it up, as soon as conveniently may be, by election, in accordance with the procedure prescribed in *Schedule C*, of a person satisfying the requirements of the class of the vacancy.

(2) The vacancy of a member of a school board appointed or nominated by Government due to any cause shall be forthwith reported by the Administrative Officer of the School Board to Government.

C—Election of Chairman and Vice-Chairman.

10. *Calling of a meeting for the election of Chairman and Vice-Chairman.*—The first meeting of a School Board shall be convened for the purpose of the election of a Chairman and a Vice-Chairman. Such meeting shall be convened by the President of the District Local Board or the authorised municipality, as soon as convenient, but not later than twenty-one days after the publication of the names of the members of the School Board in the official Gazette and a copy of the notice of such a meeting shall be sent to the Educational Inspector : provided that where no meeting for the purpose of such election has been convened within the time specified above, the Educational Inspector may exercise the powers of the President for the purpose of calling such meeting.

11. *Procedure at the first meeting.*—(1) At the first meeting convened under rule 10 the President of the District Local Board or authorised municipality, as the case may be, shall preside until the Chairman has been elected.

(2) The President of the District Local Board or authorised municipality so presiding shall not be at liberty to vote upon, or to make any proposition at the meeting unless he is himself a member of the School Board.

(3) If the President is unable, or for any reason fails to preside over the meeting, the members present shall elect from amongst themselves a Chairman for the meeting. Such Chairman shall preside over the meeting, until the Chairman of the School Board has been elected.

(4) The Chairman of the School Board shall, as soon as he is elected, preside over that meeting and the meeting shall then proceed to elect a Vice-Chairman.

12. *Manner of election of a Chairman and a Vice-Chairman.*—The Chairman or the Vice-Chairman shall be elected in the manner prescribed in *Schedule D :*

Provided that an officer of the State Government appointed as a member of the School Board shall not be elected as Chairman or Vice-Chairman.

13. *Chairman and Vice-Chairman to continue to perform duties after expiry of the term of School Board.*—On the expiry of the term of office of a School Board, the Chairman and Vice-Chairman shall continue to perform the current administrative duties of their offices until such time as a new Chairman and Vice-Chairman shall have been duly elected and have taken charge of their duties.

14. *Filling up of casual vacancy of Chairman and Vice-Chairman.*—(1) When a Chairman resigns his office as Chairman and the President of the District Local Board or the authorised municipality, informs the Vice-Chairman of the date of his acceptance of the resignation of the Chairman, or when the Chairman is removed from his office under section 10 (*2*) or ceases to be a Chairman under section 10 (*3*) of the Act, the Vice-Chairman shall call a meeting for the election of a new Chairman as soon as convenient but not later than 21 days after the acceptance of the resignation of the Chairman, or his removal from the office of the Chairman or his cessation as Chairman.

(2) When a Vice-Chairman resigns his office as Vice-Chairman or is removed from his office as Vice-Chairman under section 10 (*2*) or ceases to be a Vice-Chairman under section 10 (*3*) of the Act, the Chairman shall call a meeting for the election of a new Vice-Chairman as soon as convenient but not later than 21 days after the acceptance by him of the resignation of the Vice-Chairman or his removal from the office of Vice-Chairman or his cessation as Vice-Chairman.

(3) If there are casual vacancies both of the Chairman and of the Vice-Chairman due to any cause the President of the District Local Board or the authorised municipality shall exercise the powers of the Chairman for the purpose of calling a meeting of the School Board for the election of a Chairman and such a meeting shall be presided over as provided in rule 11.

(4) If the Vice-Chairman, or the Chairman or the President fails to convene a meeting as provided in sub-rule (1), (2) or (3), the Educational Inspector shall have the power of calling such a meeting.

D—Conduct of School Board's Business.

15. *Calling of Meetings.*—(1) The School Board shall ordinarily meet once in two months for the transaction of its business, but the Chairman may, whenever he thinks fit, and shall, upon a written request of not less than one-third of the whole number of members of the Board and on a date not later than fifteen days after the receipt of such request, call a special meeting.

(2) (i) The ordinary and special meetings of the School Board shall normally be held at the office of the School Board. The Board may, however, decide to hold its meetings at other suitable places in the district from time to time, provided that the number of meetings held outside the Headquarters of the School Board shall not exceed three in a financial year.

(ii) Subject to the provisions of paragraph (*i*) the meetings shall be held at such place and on such day and at such hour as the Chairman may appoint in this behalf.

(3) If, in the opinion of the Director, the Chairman or in his absence the Vice-Chairman is for any reason unable to call or is deliberately abstaining from calling an ordinary or special meeting of the School Board within the prescribed time, the Director may authorize the Educational Inspector or any other officer of the Educational Department of Government to call such meeting and such meeting shall thereupon be deemed to have been duly called by the Chairman.

16. *Notice for calling a meeting.*—(1) All members of a District School Board shall be given 10 clear days' notice of an ordinary meeting and 5 clear days' notice of a special meeting of the School Board.

(2) All members of a Municipal School Board shall be given 5 clear days' notice of an ordinary meeting and 3 clear days' notice of a special meeting of the School Board.

(3) Every notice under sub-rule (1) or (2) shall also be posted up at the School Board Office. Such Notice shall specify the place of meeting and business to be transacted thereat and in the case of a special meeting any motion or proposition mentioned in the request for calling such a meeting shall also be specified.

17. *Quorum.*—Four members in the case of a School Board the total number of members of which does not exceed fourteen and five members in the case of a School Board the total number of members of which exceeds fourteen shall be deemed to constitute a quorum.

18. *Chairman to preside.*—Every meeting of the School Board shall be presided over by the Chairman or if the Chairman is, for any reason, unable to attend it, by the Vice-Chairman, and if both the Chairman and Vice-Chairman are, for any reason, unable to attend it, by such one of the members present as may be chosen by the meeting to be Chairman for the occasion.

19. *Adjournment of the meeting.*—(1) If there is no quorum as laid down in rule 17, the presiding authority shall, after waiting for thirty minutes after the expiration of the appointed hour, adjourn the meeting to such hour on some other future day as he may reasonably fix. A notice of such adjournment

shall be sent to every member of the School Board and posted up at the School Board office and the business which would have been brought before the original meeting, had there been a quorum thereat, shall be brought before the adjourned meeting and may be disposed of at such meeting or at any subsequent adjournment thereof, whether there be a quorum or not.

(2) Any special or ordinary meeting may, with the consent of a majority of members present, be adjourned from time to time; but no business shall be transacted at any such adjourned meeting other than that left undisposed of at the meeting from which the adjournment took place.

20. *Administrative Officer to give his remarks on the various items of business.*—It shall be the duty of the Administrative Officer to offer in writing his remarks on each item of business or proposition entered in the notice. Before proceeding to the consideration of each item the remarks of the Administrative Officer shall be circulated to every member of the School Board present at the meeting.

21. *Presence of Educational Inspector.*—The School Board may invite the Educational Inspector to attend a meeting if his presence thereat appears to be desirable; and provided that adequate notice has been given, it shall be incumbent upon him to attend or depute a representative to attend on his behalf. The invitation shall specify clearly the item of business in connection with which such presence is desired and the place, date and hour of the meeting and should be posted so as to reach him at least ten or five days before the date of an ordinary or special meeting, respectively. The Educational Inspector or his representative shall have the right of taking part in the discussion but shall not vote.

22. *Business to be transacted at a meeting.*—(1) No business shall be transacted and no proposition shall be discussed at any ordinary meeting unless it has been entered in the notice convening such meeting or, in the case of a special meeting, in the written request made for convening such meeting:

Provided that the Chairman may, in his discretion, permit any business or proposition to be discussed which is of an urgent nature and which could not reasonably be entered in the notice:

Provided further that such permission shall be refused in the case of a motion or proposition to modify or cancel any resolution within four months of the passing thereof.

(2) The order in which any business or proposition shall be brought forward at a School Board meeting shall be determined by the presiding authority, who in case it is proposed by any member to give priority to any particular item of such business or to any such proposition shall put the proposal to the meeting and be guided by the majority of votes given for or against the proposal.

23. *Cancellation of a resolution.*—No resolution of a School Board shall be modified or cancelled within four months after the passing thereof, except by a resolution supported by one-half of the whole number of members and passed at an ordinary meeting whereof notice shall have been given fulfilling the requirements of rule 16 and setting forth fully the resolution which it is proposed to modify or cancel at such meeting and the motion or proposition for the modification or cancellation of such resolution.

24. *Vacancy not to affect proceedings.*—During any vacancy in a School Board, the continuing members may act as if no vacancy had occurred.

25. *Circulation of written propositions.*—(1) Whenever it appears unnecessary to the Chairman of a School Board to convene a meeting, he may instead of so doing circulate a written proposition of his own or of any other member of such Board or Committee or of the Administrative Officer for the observations and votes of the members.

(2) Previous to circulating any such proposition for the votes of members, the Chairman may, if he thinks fit, and if the business to which it relates is of the nature described in rule 21, shall obtain thereon the remarks of the Educational Inspector or of an officer authorised by him in this behalf.

(3) Except as otherwise provided in the Act and the rules thereunder, the decision on any proposition so circulated shall be in accordance with the majority of votes of the members who vote upon it, unless a special meeting is convened to consider the proposition under sub-rule (1) of rule 15.

(4) Every decision arrived at by the Board under this rule shall be recorded in the minute book kept under rule 28.

26. *All questions to be decided by majority.*—(1) Except as otherwise provided in the said Act or the rules thereunder, all questions shall be decided by a majority of votes of the members present, the presiding authority having a second or casting vote in all cases of equality of votes.

(2) Subject to the provisions of the Act and of these rules, the School Board may, from time to time, determine the manner in which its business should be transacted.

27. *Meetings to be open to the public.*—Every meeting of the School Board shall be open to the public unless the presiding authority deems any enquiry or deliberation pending before the Board, such as should be held in private :

Provided that the said authority may at any time cause any person to be removed who interrupts the proceedings or whose presence, in his opinion, is undesirable.

28. *Minutes of the meeting.*—(1) Minutes of the proceedings of each meeting of the Board shall be kept in a book to be provided for the purpose and shall include the names of the members and the Government Officer, if any, invited under rule 21, and if any member present at the meeting so desires, the names of the members voting respectively for or against any resolution. This book shall be signed, as soon as possible, by the presiding authority and shall, at all reasonable times, be open to inspection by any member of the Board or by an officer authorised by the State Government in this behalf. Copies of the minutes shall be supplied to every member of the School Board within a week from the date of the meeting.

(2) Copies of the minutes shall also be forwarded within two weeks from the date of the meeting to the Educational Inspector of the Division, and, if the School Board is a municipal school board, also to the authorised municipality for which it has been constituted. On receipt by such authorised Municipality of copies of such minutes, they shall be placed before the next meeting of the authorised Municipality.

(3) All resolutions of the School Board other than those passed at private deliberations of the Board shall be published as soon as may be by affixing a copy thereof in some conspicuous place in or near the office of the School Board.

29. *Acts of the School Board not to be invalided by informalities.*—No action of a School Board or of any person acting as a Chairman, Vice-Chairman or member of the Board shall be deemed to be invalid by reason only of some defect in the constitution of such Board or in the appointment of such Chairman, Vice-Chairman or member or on the ground that they, or any of them, were disqualified for the office of member, or that formal notice of the intention of holding a meeting of the Board was not duly given or for any other such mere informality.

E—Travelling Allowance to School Board Members.

30. *Travelling allowance to members.*—(1) The members of a District School Board other than the Government officers appointed under section 4 (*4*) may receive payment for the expenses incurred by them in travelling for attending the meetings of the Board or for doing such business of the Board as may be entrusted to them by the Board. Such payment shall be made in accordance with the rules made in this behalf by Government under clause (*d*) of section 133 of the Bombay Local Boards Act, 1923 :

Provided that no travelling allowance shall be admissible to a Chairman, Vice-Chairman or a member of the District School Board for a journey undertaken by him outside the jurisdiction of the Board unless the sanction of the School Board and the Director has been obtained for undertaking such journey.

Note.—(i) No travelling allowance shall be admissible to any member of a District School Board other than the Chairman or Vice-Chairman for visiting schools or for purposes of holding an inspection or enquiry which comes solely within the scope of the duties of the Administrative Officer or other officer or servant of the School Board.

(ii) The Chairman of the District School Board shall as far as may be practicable, in consultation with the President of the District Local Board of the District, arrange to hold the meetings of the School Board in conjunction with the dates fixed for the meetings of the District Local Board.

(2) Non-official members and Chairman of a District School Board shall draw travelling and daily allowances as under—

(i) for a journey performed by railway, one and half return fares of class II ;

(ii) mileage allowance for a journey performed by road or steamer, as far a journey on tour admissible to a Government servant of the second grade ;

(iii) daily allowance admissible to a Government servant of the second grade drawing pay up to Rs. 300 per mensem.

(3) The annual expenditure in respect of travelling allowances of the Chairman and a member of a District School Board payable from the Primary Education Fund shall not except with the previous permission of the Director, exceed Rs. 750 in the case of the Chairman and Rs. 300 for the Vice-Chairman who may occasionally perform the duties of the Chairman and Rs. 200 in the case of each of the members.

(4) If the member of a District School Board who is also a member of the District Local Board in the District performs only one journey to attend meetings of the District School Board as well as of the District Local Board, such member shall not be allowed to draw from the Primary Education Fund travelling allowance in respect of more than one single journey and daily allowance admissible under the rules for the day on which he performs work for the District Local Board. In such a case the travelling expenses of such member for the return journey shall be paid out of the local fund of the District Local Board.

(5) Travelling allowance shall be admissible to the Chairman or a member of a District School Board—

(i) if he performs a journey to attend a meeting of the District School Board which does not take place for want of a quorum ; or

(ii) if he is shown in the proceedings of the meeting of the District School Board as having been present during any part thereof : provided that if the meeting continues for more than one day, he shall not be entitled to daily allowance, for any day on which he has not attended the meeting.

The Chairman or member shall, in any case, not be entitled to any daily allowance unless he resides at the place where the meeting is held, for at least six hours.

31. *Statements and Travelling Allowance bills to be approved by the School Board.*—(1) The statements of the movements on duty of the Chairman and/or Vice-Chairman with their travelling allowance bills, in respect of such journeys on duty made in the preceding two months shall be placed before each ordinary meeting.

(2) The amount of the travelling allowance bills in respect of Chairman and Vice-Chairman shall not be drawn until they are approved by the School Board. The travelling allowance bills of the other members shall be countersigned by the Chairman and drawn by the Administrative Officer.

CHAPTER III.

Duties and Functions of District School Boards, Authorised Municipalities, Municipal School Boards, Chairmen and Vice-Chairmen.

A—*Duties and Functions of District School Boards, Authorised Municipalities and Municipal School Boards.*

(a) Primary Schools.

32. *Maintenance of Primary Schools.*—(1) A district school board or authorised municipality shall maintain an adequate number of primary schools in which instruction is given through the medium of the local regional language.

(2) In addition to primary schools maintained under sub-rule (1), a district school board or authorised municipality shall maintain—

(*i*) schools teaching up to and inclusive of Standard IV in which instruction is given through the medium of some other Indian language in any area in which parents of not less than 40 pupils whose mother tongue is such other language desire that their children should receive instruction through the medium of such other language ;

(*ii*) schools teaching up to and inclusive of Standard IV in which instruction is given through the medium of some other Indian language in any forest area in which parents of not less than 20 pupils whose mother tongue is such other language desire that their children should receive instruction through the medium of such other language ;

(*iii*) schools teaching Standards V to VII in which instruction is given through the medium of Urdu or Sindhi or a regional language other than the local regional language, if there are, in any area, in all the seven standards together at least 60 pupils, of whom at least 20 are in Standards V, VI and VII, whose mother tongue is such other language and whose parents desire that their children should receive instruction through the medium of such other language. The upper primary standards in such schools may be closed if the number of pupils in those standards is less than twenty for a period of two years at any time :

Provided that it shall not be obligatory on a district school board or authorised municipality to maintain primary schools under this sub-rule, in any area, if there is already an approved private school in the area in which instruction is given through the medium of such other language and which meets adequately the needs of the area.

(2A) In the border areas of linguistic regions the medium of instruction in primary schools shall be such language as the State Government may direct.

(3) In every approved school in which instruction is given through the medium of such other language the regional language of the locality shall also be taught to pupils from Standard III onwards :

Provided that it shall not be obligatory in the case of approved schools in the border areas of linguistic regions, in which the medium of instruction is not the local regional language, to teach the local regional language to the pupils in such schools, unless so directed by the State Government.

(4) Notwithstanding anything contained in the preceding sub-rules, in schools in the Bombay Suburban District in which instruction is imparted through one of the three regional languages of the State, there shall be no compulsion to teach any other regional language. The teaching of one of the three regional languages shall, however, be compulsory from standard III onwards in such schools in which instruction is imparted through any language other than the three regional languages of the State.

Note 1.—A language shall be accepted as the mother tongue of a child if the parent makes a declaration in writing that such language is the child's mother tongue.

Note 2.—The expression "local regional language" means the predominant regional language of the district for which the district school board is constituted or in which the authorised municipality concerned is situated.

Note 3.—Such other language referred to in this rule shall not be a dialect but shall be a language recognised as such by the State Government.

Note 4.—In the case of any doubt about what is a forest area, a border area, the local regional language or the medium of instruction for any school or any other point for the purposes of this rule, the matter shall be referred to the State Government and the decision of the State Government shall be final.

33. *Opening of new schools.*—A district school board with the previous sanction of Government and a municipal school board, so far as the budget provision made by the authorised municipality will allow, may, wherever necessary, open new primary schools. If such new primary schools are to be opened in areas of non-authorised municipalities, the district school board or authorised municipality, as the case may be, shall while determining the location of such schools give due consideration to the suggestions, if any, made by such non-authorised municipality.

34. *Provision for grants to approved private schools.*—It shall be the duty of every authorised municipality to make such provision in its budget as will enable the approved private schools in its area to receive grants at the rates prescribed in Chapter VII of these rules.

35. *Facilities for children of backward communities, and other indigent children.*—(1) Every district school board or authorised municipality shall pay special attention to the education of the backward communities and may, so far as its budget provision will allow, make special provision for scholarships and hostels for children of these communities. It may also make provision for supplying free of cost books and slates for indigent pupils of all communities.

(2) Every district school board or authorised municipality shall, so far as its budget provision will allow, continue to maintain special facilities already provided for the backward communities at the time these rules come into force.

(b) Staff.

36. *Schedule of staff.*—(1) Every district school board shall maintain a schedule of staff, permanent or temporary, sanctioned by Government setting forth the designations, grades, pay and nature of appointment of different members of the staff. No change or alteration in this schedule shall be made without the previous sanction of Government.

(2) Every municipal school board shall prepare a schedule which the authorised municipality shall sanction, with or without modifications, of the staff permanently required by it setting forth the designations, grades and pay of the different members of the staff.

In addition, the municipal school board may with the sanction of the authorised municipality employ such temporary staff as may be required provided that the period of appointment of such temporary staff shall not exceed three years except with the sanction of Government and provided further that the expenditure on such

staff (whether permanent or temporary) shall not be admitted for grant unless it has been previously sanctioned and held admissible for grant by Government.

37. *Teachers.*—(1) Every district school board or authorised municipality shall ensure that the number of pupils on the rolls of a class in charge of a primary school teacher and, if a teacher is in charge of more than one class, the total number of pupils on the rolls of all such classes does not, save in special circumstances, exceed 40 in any session.

(2) Every district school board or authorised municipality shall, as far as possible, maintain one extra primary school teacher in addition to the ordinary class teachers maintained in accordance with sub-rule (1) if the number of pupils in a primary school exceeds 200.

(3) The "shift system" by which a certain proportion of the pupils attends school in one session and the remainder in another session during the day, the same teacher attending at both sessions, shall be adopted in standards I and II in all schools in an area of compulsion except the basic schools or schools in which craft is introduced and may, in other areas, be adopted for classes up to standard IV in single-teacher schools:

Provided that in such cases no teacher shall be entrusted with more than two classes or 40 pupils during either session:

Provided further that the Director may, in special circumstances, exempt any particular school from the operation of this sub-rule.

(4) It shall be the duty of every district school board or authorised municipality to depute every year for training such number of untrained primary school teachers employed by or under it as the Director may require and to make adequate provision for the purpose in its budget. Every primary school teacher who is deputed for training by a district school board or authorised municipality shall, if he holds a permanent appointment, be paid by the said board or Municipality, as the case may be, his substantive pay and such allowances as Government may direct from time to time, for the whole period of his training and shall be considered as on duty for the purposes of leave, pension, provident fund and increments.

38. *Attendance Officers.*—In an area of compulsion, the district school board or authorised municipality shall, with the approval of Government, maintain a staff of attendance officers on the following scale for enforcing the attendance of children liable for compulsion unless the number of children to whom a scheme applies does not, in its opinion, justify maintenance of such officers in accordance with such scale:—

(*a*) Not less than one attendance officer for every 3,000 pupils liable for compulsion in rural areas and 5,000 pupils in the area of a non-authorised municipality.

(*b*) Not less than one attendance officer for every 5,000 pupils liable for compulsion in the case of an authorised municipality.

39. *Authorised municipality to appoint clerks and other staff.*—An authorised municipality shall, after taking into consideration the recommendations of the municipal school board, make new appointments of clerks and of staff other than the assistant Administrative Officers, Supervisors, Attendance Officers, teachers and inferior servants.

40. *Loan or transfer of services of staff.*—Subject to the provisions of the Act, a district school board on the recommendation of the Administrative Officer and an Authorised Municipality on the recommendation of the School Board may sanction the loan or transfer of the services of any member of the staff maintained by it under section 20 of the Act to another district school board or authorised municipality or Government or private institution on such terms and conditions as may be mutually agreed upon between it and such other board or municipality or Government or private institution.

41. *Reinstatement, re-employment or extension of service.*—A district school board on the recommendation of the Administrative Officer and an authorised municipality on the recommendation of the School Board may sanction re-instatement or re-employment or extension of service to any member of the staff maintained under section 20 :

Provided that no such member who has been convicted and sentenced by a criminal court for any offence committed by him while on duty or on leave shall be reinstated or re-employed unless the school board or the authorised municipality, as the case may be, decides by a majority of ⅔rds of the whole number of members that there are extenuating circumstances justifying such re-instatement or re-employment.

42. *District school board or authorised municipality to replace the services of the lent staff.*—A district school board or an authorised municipality, as the case may be, may replace at the disposal of Government the services of any assistant Administrative Officer, Supervisor, Attendance Officer, clerk, inferior or other servant if the services of such person have been lent by Government :

Provided that six months' previous notice shall be given to Government of the intention to replace such services.

(c) Buildings and Equipment.

43. *Provision of accommodation and equipment in primary schools.*—(1) It shall be the duty of every district school board or authorised municipality to provide as far as possible, accommodation and equipment as prescribed in section C of Chapter VII of these rules.

(2) In the district school board area, new primary school buildings for schools maintained by the District School Board shall be constructed and extensions to existing primary school buildings, owned by the district school board, shall be carried out by the district building committee of the district in accordance with the rules framed and instructions issued from time to time by Government. Special or ordinary repairs to its primary school buildings shall be carried out by the district school board.

(3) In the areas of an authorised municipality, new primary school buildings for schools maintained by the municipality shall be constructed and extensions or special or ordinary repairs to its existing primary school buildings shall be carried out by the authorised municipality.

(4) A district school board or authorised municipality shall prepare and execute trust deeds, agreements or other instruments, as may be laid down by Government from time to time for building grants paid by Government for schools maintained by it and also prepare and execute agreements and leases in respect of any premises rented by it for the purposes of a primary school.

(d) Other Duties and Functions.

44. *Preparation of schemes for voluntary expansion.*—Subject to the provisions of rule 200 a district or municipal school board may prepare and introduce a scheme for the expansion of primary education on a voluntary basis.

45. *Preparation of draft regulations by municipal school board.*—A municipal school board shall prepare draft regulations to be made by the authorised municipality under section 17 (*3*) of the Act.

46. *Notice to the Director of the removal of the Administrative Officer.*—Whenever an Administrative Officer, who is a Government servant and whose services have been lent by Government to an authorised municipality to which Government has delegated the power to appoint an administrative officer under section 22 (*1*) of the Act, is removed from that office by a resolution passed by at least two-thirds of the whole number of councillors of the municipality, the municipality shall at once communicate to the Director its decision as regards such removal.

47. *Orders to be transmitted through the Administrative Officer.*—Every general or special order or instruction relating to the administration and control of primary schools or to the conduct or discipline of the staff issued by the school board or the authorised municipality, as the case may be, shall be transmitted through the Administrative Officer.

B—Duties and Functions of the Chairman.

48. *Duties and functions of the Chairman.*—Subject to the provisions of the Act and these rules the Chairman of a School Board shall—

(*a*) watch over the general administration of primary education in the area of the district school board or authorised municipality, as the case may be, and submit to the school board all questions connected therewith which require its decision;

(*b*) arrange to call the meetings of the school board other than the first meeting convened for electing the chairman, and shall fix the place, date and time of such meetings;

(*c*) preside over such meetings;

(*d*) attend meetings of the staff selection committee or the appellate tribunal constituted under sections 23 (*1*) and 24 (*2*) of the Act and perform his duties as member of such committee or tribunal unless prevented by sickness or other reasonable cause in which case the Vice-Chairman shall act on his behalf;

(*e*) sanction, on the recommendation of the Administrative Officer, changes in the dates of birth and names of pupils attending primary schools;

(*f*) if he is the chairman of a district school board, tour in the district for not less than eighteen days in every three months for carrying on propaganda for the expansion of primary education, for keeping himself in touch with the progress of primary education in the district, and for performing such other duties as may be entrusted to him by the district school board and keep a diary recording the places visited and the work done by him at such places for the board's information.

49. *Emergency duties of the Chairman.*—The Chairman of the school board may, in case of emergency, perform such acts as may appear to him to be necessary provided that any of the provisions of the Act or these rules are not thereby contravened and provided further that he shall report at the next ordinary meeting of the school board the action taken and reasons therefor to the school board.

C—Duties and Functions of the Vice-Chairman.

50. Subject to the provisions of the Act and these rules, the vice-chairman of the school board shall—

(*a*) perform such of the duties of the chairman as the chairman may, from time to time, delegate to him,

(*b*) in the absence of the chairman, preside over the meetings of the school board, and

(*c*) pending the election of a chairman or if the chairman is for any reason unable to perform his duties, perform the duties of the chairman.

D—Contracts and Compromises.

51. *Mode of executing contracts.*—(1) The chairman of a district school board may, on behalf of the board, enter into any contract or agreement in such manner or form as, according to the law for the time being in force, would bind him if the contract or agreement were entered on his own behalf; provided that the amount or value of such contract or agreement shall not exceed five hundred rupees.

(2) Every other contract or agreement on behalf of a district school board shall be in writing, and shall be signed by the chairman and two other members of the Board and sealed with the common seal of the Board.

52. *Power to compromise.*—(1) A district school board with the previous sanction of Government may compromise in respect of any suit instituted by or against it or in respect of any claim or demand arising out of any contract entered into by it for such sum of money or other compensation as it may deem sufficient.

(2) A district school board with the previous sanction of Government may make compensation out of the Primary Education Fund to any person sustaining any damage by reason of the exercise of any of the powers vested in it and its officers and servants under the Act.

E—TENDERS.

53. *Preparation of an estimate.*—The Administrative Officer shall, before the 15th of July every year, prepare an estimate for all items of forms, stationery, furniture and equipment required by the schools maintained by the district school board or authorised municipality or by the school board office during the ensuing financial year in the following form :—

Description of the article.	Balance in hand.	No. or quantity required during the ensuing year.	No. or quantity to be purchased.	Estimated cost of the quantity or No. to be purchased.	Remarks.

This estimate shall be accompanied by a clear statement showing how the estimated requirements have been arrived at. The Administrative Officer shall place the estimate before the school board along with the draft school board budget. The school board shall then decide what provision should be entered in its budget for the purpose.

54. *Re-examination of the estimate.*—As soon as possible after the school board budget is sanctioned, the school board shall in consultation with the Administrative Officer re-examine the estimate with reference to the provision made in its budget for the purpose and decide which items entered in the estimate should be purchased.

55. *When tenders to be invited.*—Purchase of forms and stationery, furniture and equipment which are estimated to cost more than Rs. 500 shall be made after inviting tenders. Articles costing less than Rs. 500 may be purchased by the school board by inviting tenders or quotations. Provided that the provisions of this rule and of rules 56 to 59 shall not apply in the case of purchases made from Government or from the Local Self-Government Institute, Bombay or through the Village Industries Committee, Bombay.

56. *Manner of inviting tenders.*—(1) Contract documents with regard to the supply of forms, stationery, furniture and equipment shall be prepared by the Chairman.

(2) The Administrative Officer shall then invite tenders by advertisement in one or more newspapers having circulation in the area as may be deemed necessary.

(3) If a supply is required so urgently that advertisement is not possible, the Administrative Officer may, with the approval of the chairman, invite competitive tenders from several capable local contractors, not less than three in any case, provided that the estimated cost of the articles required does not exceed Rs. 500. In such cases, the Administrative Officer shall give detailed reasons to the school board at its next meeting for not inviting tenders by advertisement.

(4) The tenders shall always be sealed and the tenderers shall have free access to all contract documents. The notice for tenders should, in all cases, state—

(*a*) the place where and the time when the contract documents can be seen and the blank forms of tenders obtained, also the amount, if any, to be paid for such forms of tender.

(*b*) the place where, the day on which and the time when the tenders are to be submitted and are to be opened.

(*c*) the amount of earnest money to accompany the tender and the amount and nature of the security deposit required in the case of the accepted tender.

(*d*) the right to reject any of the tenders received by the school board without the assignment to the tenderer of the reason for such rejection vests in the school board.

Note.—As a rule no tender shall be entertained which is not accompanied by the deposit of cash money. The amount of earnest money to be recovered from the tenderer shall be 1 per cent. of the estimated cost of the supply of forms, stationery, furniture or equipment, as the case may be, subject to a minimum of Rs. 15. The tenderers, when submitting their tenders, shall be called upon to produce evidence of their financial status from the Collector of the District or from the Government within whose jurisdiction they reside :

Provided that in the case of contracts involving an amount of Rs. 2,500 or less the production of evidence of financial status may be dispensed with at the discretion of the Administrative Officer of the school board concerned.

57. *Opening of tenders.*—At the advertised time and place, all tenders received for the same contract shall be opened by the Administrative Officer in the presence of the Chairman and of such of the intending contractors or their agents as may choose to attend. The tenders thus received shall then be signed by the Chairman and the Administrative Officer and shall thereafter be kept in custody of the Administrative Officer.

58. *Administrative Officer to offer remarks.*—Within one week of the opening of the tenders, the Administrative Officer shall scrutinise them and submit his recommendations to the School Board.

59. *Acceptance of tenders.*—As soon as possible after the receipt of the Administrative Officer's recommendations, the school board shall scrutinise such tenders with reference to the remarks offered by the Administrative Officer thereon and decide which of such tenders shall be sanctioned. Ordinarily the School Board shall sanction the lowest tender unless there is some objection to the capability of the tenderer, his financial status, the security offered by him or execution of former work or for some other sufficient cause. If a tender other than the lowest tender is accepted, the school board shall record its reasons in writing for doing so and shall when the amount involved exceeds Rs. 5,000 obtain the sanction of the Director in the case of a District School Board or of the authorised municipality in the case of a municipal school board.

CHAPTER IV.

NON-AUTHORIZED MUNICIPALITIES.

60. *Consultation with the Non-Authorised Municipalities.*—(1) A District School Board or Authorised Municipality, as the case may be, which controls approved schools in the area of a Non-Authorised Municipality may in consultation with such Non-Authorised Municipality—

(*a*) determine the location of new primary schools to be opened in the area of such Municipality ;

(*b*) close any primary school maintained by it in the area of such Municipality ;

(*c*) carry out special or ordinary repairs to primary school buildings in the area of such municipality ;

(*d*) prepare schemes for the expansion of primary education in the area of such Municipality ; and

(*e*) do any other matter connected with primary education, on which it considers consultation with such municipality to be necessary.

(2) A Non-Authorised Municipality may, of its own accord, make suggestions to the District School Board or Authorised Municipality, as the case may be, on any matter affecting primary education within its area. The District School Board or Authorised Municipality concerned shall give due consideration to such suggestions.

CHAPTER V.

ADMINISTRATIVE MACHINERY.

A—Powers and duties of the Administrative Officer.

61. *Powers and duties as the Chief Executive Officer of the School Board.*—

(1) *Duties in relation to the meetings of the School Board.*—The Administrative Officer shall be responsible for—

(*a*) arranging for the preparation of the agenda of the School Board meeting and submitting such agenda to the Chairman for his approval;

(*b*) offering in writing his remarks on each item of the agenda as approved by the Chairman;

(*c*) arranging for the issue to all members of the School Board of the notice about the place, date, time and agenda of the School Board meeting;

(*d*) attending all meetings of the School Board and the important ones of its sub-committees, and answering such questions and supplying such information as may be put or called for in such meeting. (He shall not, however, be entitled to vote);

(*e*) arranging for the keeping of the minutes and reports of such meetings accurately and clearly;

(*f*) taking action on the minutes or reports whenever necessary; and

(*g*) doing such other work connected with the meetings of the School Board as may be found to be necessary subject to any directions given by the Chairman.

(2) *Duties in relation to Primary Schools.*—The Administrative Officer shall—

(*a*) be responsible for the general administration of all Primary Schools maintained by the District School Board or Authorised Municipality, as the case may be, and, in particular, for determining and satisfying, as far as possible, the requirements of such schools in regard to accommodation, staff, furniture, equipment, repairs and other general supplies, for the conduct and discipline of these schools as educational institutions, for the organisation of annual examinations in such schools and for their periodical visitation with a view to checking their day to day working;

(*b*) determine and pay grant-in-aid to approved private schools on behalf of the School Board;

(*c*) be responsible for carrying out the suggestions made from time to time by the officers appointed by Government under section 48(*1*) of the Act in connection with the schools maintained by the District School Board or Authorised Municipality.

(3) *Duties in regard to schemes of expansion.*—The Administrative Officer shall—

(*a*) arrange for the preparation of the draft schemes for the expansion of primary education on a voluntary or compulsory basis either on his own motion or according to the directions received from Government, Director or the School Board or the Authorised Municipality, as the case may be;

(*b*) submit to the School Board proposals for additional expenditure;

(*c*) if he is the Administrative Officer of a District School Board, be responsible for carrying out the provisions of a sanctioned scheme; and

(*d*) do such other work in connection with the schemes of expansion as may be found necessary.

(4) *Duties with regard to Financial matters.*—The Administrative Officer shall be responsible for—

(*a*) arranging for the timely preparation of the annual or revised or supplementary budget of the School Board and of the reappropriation statement ;

(*b*) reporting on the financial effect of all proposals for the expansion of primary education or new items of expenditure ;

(*c*) answering all objections raised by the Auditors ; and

(*d*) for the general administration, maintenance and use of the Primary Education Fund.

(5) *Duties in relation to educational matters.*—(*a*) It shall be the duty of the Administrative Officer to advise the School Board generally on all matters connected with primary education in its area and on the working of the schemes of educational expansion.

(*b*) In particular, and without prejudice to the generality of the foregoing clause, the Administrative Officer shall—

(*i*) make recommendations to the School Board in regard to the taking over of private schools or the development of the existing lower grade schools maintained by the District School Board or Authorised Municipality into full-grade schools or the places where new schools should be opened ;

(*ii*) make, on the basis of the Deputy Educational Inspector's remarks, recommendations to the School Board for the first recognition or the payment of grant-in-aid to a private school or for the withdrawal of such recognition or grant-in-aid;

(*iii*) recommend to the School Board the distance measured according to the nearest road between an approved school and the residence of a child for the purposes of clause (*c*) of section 33 of the Act ;

(*iv*) recommend to the School Board the grant of exemption from attending an approved school to a child who is receiving instruction otherwise than in an approved school ;

(*v*) be responsible for causing enquiries to be made into the needs of different villages and areas, particularly of backward areas as regards primary education ;

(*vi*) make recommendations to the School Board, in regard to the changes in the curriculum to meet local requirements ;

(*vii*) prepare draft regulations to be made by the District School Board under section 13(*3*), by the Authorised Municipality under section 17(*3*) and by the Municipal School Board under section 18(*3*) of the Act, as the case may be ;

(*viii*) be responsible for determining the requirements of school libraries and reading rooms and arrangement for the award of prizes in schools ; and

(*ix*) perform such other duties connected with educational matters as may be found necessary.

(6) *Duties with regard to the properties of the District School Board and Authorised Municipality.*—(*a*) The Administrative Officer shall be responsible for—

(*i*) arranging for the maintenance of an inventory of all properties—moveable and immoveable—vesting in, held by or under the control of the District School Board or Authorised Municipality, as the case may be ;

(*ii*) ensuring that such property is properly cared for and is kept in good order ;

(*iii*) arranging for the carrying out, so far as the School Board budget will allow, of special or ordinary repairs to school and other buildings belonging to the District School Board or Authorised Municipality ;

(*iv*) assisting the District Building Committee, District School Board or Authorised Municipality, as the case may be, in regard to alterations, enlargements or improvements in school and other buildings belonging to the District School Board or Authorised Municipality ;

(*v*) performing such other duties connected with the property of the District School Board or Authorised Municipality as may be found necessary.

(*b*) The Administrative Officer of a District School Board, as Secretary of the District Building Committee in the District shall be responsible for—

(*i*) arranging for the collection of all available information about the sites and existing accommodation in schools maintained by the District School Board, the additional accommodation required for such schools, the amount of grant sanctioned by Government to the District Building Committee in any year for the construction and extension of school buildings, the contributions received from the villagers or Non-Authorised Municipal areas for the purpose, the number of buildings that can be constructed or extended with the help of such grant and contributions ;

(*ii*) recommending to the District Building Committee priority for construction or extension of school buildings in the District School Board area ;

(*iii*) attending all meetings of the District Building Committee ;

(*iv*) taking steps, as soon as the District Building Committee decides to construct or extend any primary school building, to—

(*a*) select, acquire and/or purchase the site for the school building,

(*b*) invite tenders for construction or extension of the building and place such tenders with his remarks before the District Building Committee for its orders,

(*c*) get the building work supervised by the Public Works Department officers and obtain from them a valuation certificate after the building is constructed or extended, as the case may be,

(*d*) arrange for handing over the building to the District School Board after completion ;

(*v*) arranging for the maintenance of the accounts of the funds under the control of the District Building Committee ; and

(*vi*) doing such other work connected with the District Building Committee as may be found necessary.

(7) *Duties with regard to general administrative matters.*—The Administrative Officer shall—

(*a*) assist the School Board Chairman with regard to the preparation of contract documents for the supply of forms, stationery, furniture or equipment for which tenders are required to be called for, invite such tenders and place them before the School Board for orders with his recommendations ;

(*b*) cause enquiries to be made into applications for changes in the names and birth dates of pupils attending primary schools and submit his recommendations to the School Board Chairman after full investigation into the circumstances necessitating such changes and recording in writing reasons for such changes ;

(*c*) cause enquiries to be made into complaints received from the public or otherwise on any matter affecting primary education in his jurisdiction ;

(*d*) tour in the district, if he is the Administrative Officer of a District School Board, for such minimum number of days as may be laid down by the Director in this behalf for watching over and generally for keeping himself in touch with the administration of primary education in the district ;

(*e*) arrange for the annual inspection of schools maintained by the District School Board or Authorised Municipality in consultation with the Deputy Educational Inspector ; and

(*f*) arrange for the consolidation of the annual statistics of schools, pupils, etc. and for the preparation of the annual report on the administration of primary education in the area of the District School Board or Authorised Municipality, as the case may be.

62. *Duties as Secretary of the Staff Selection Committee.*—The Administrative Officer shall—

(*a*) cause to be prepared every year a rough estimate of the vacancies likely to arise during the course of the year among the staff (excluding the inferior staff) maintained by a District School Board or among the posts of Assistant

Administrative Officers, Supervisors, Attendance Officers and teachers maintained by the Authorised Municipality, as the case may be;

(*b*) invite, by advertisement in the local newspapers, applications from qualified candidates for such vacancies if candidates already selected by the Staff Selection Committee are not available to fill such vacancies;

(*c*) cause a statement to be prepared showing the names of all candidates who have applied for the advertised vacancies, their age, community, qualifications, previous experience and other particulars and place such statement before the Staff Selection Committee;

(*d*) arrange to call for interviews such candidates whom the Staff Selection Committee desires to interview, and prepare a list of selected candidates;

(*e*) cause a statement to be prepared in accordance with the directions given by the Director showing the names of teachers recommended for training, their age, community, qualifications and other particulars and place such statement before the Staff Selection Committee for its orders;

(*f*) fix in consultation with the other members of the Staff Selection Committee the place, date and hour of the meeting of the Staff Selection Committee;

(*g*) attend all meetings of the Staff Selection Committee; and

(*h*) do such other work connected with the Staff Selection Committee as may be found necessary.

63. *Powers and duties with regard to the Staff of a District School Board or Authorised Municipality*—(1) *Appointments.*—(*a*) The Administrative Officer shall have power to appoint inferior servants.

(*b*) The Administrative Officer of a District School Board shall—

(*i*) in his capacity as Administrative Officer, issue orders of appointments of candidates selected by the Staff Selection Committee for posts of teachers;

(*ii*) on behalf of the District School Board, issue orders of appointments of candidates selected by the Staff Selection Committee for posts of Assistant Administrative Officers, Supervisors, Attendance Officers, Clerks and other posts (excluding posts of teachers and inferior servants) in accordance with the directions given by the Staff Selection Committee; and

(*c*) The Administrative Officer of a Municipal School Board shall—

(*i*) in his capacity as Administrative Officer, issue orders of appointments of candidates selected by the Staff Selection Committee for posts of teachers;

(*ii*) on behalf of the Authorised Municipality issue orders of appointments of candidates selected by the Staff Selection Committee for the posts of Assistant Administrative Officers, Supervisors and Attendance Officers in accordance with the directions given by the Staff Selection Committee; and

(*iii*) recommend to the Municipal School Board the names of candidates for new appointments to posts mentioned in rule 39 of these rules.

(2) *Administrative Control.*—The Administrative Officer shall have power—

(*a*) to supervise, control and co-ordinate the work of the staff maintained by the District School Board or Authorised Municipality under section 20 of the Act;

(*b*) to promote, transfer, censure, fine, withhold increments of, reduce, suspend, remove, or dismiss any member of such staff, subject to such general instructions as may, from time to time, be issued by the Director in this behalf:

Provided that no order of reduction, removal or dismissal shall be passed unless an enquiry has been made into the conduct of such member by the Administrative Officer or by a person authorised by him in this behalf in accordance with the procedure laid down in the Bombay Civil Services Conduct Discipline and Appeal Rules.

Note.—The removal or dismissal of any person under this clause may involve the loss of the whole or part of any pension admissible to such person or of such portion of the provident fund as is contributed by the District School Board or Authorised Municipality;

(*c*) to grant casual or any other kind of leave to any such member: provided that if the period of leave exceeds three months, the leave shall be sanctioned by the School Board;

(*d*) to recommend, in consultation with the Assistant Administrative Officer, if there be any, to the School Board the reinstatement or re-employment of or extension of service to any member of the staff maintained under section 20 of the Act; and

(*e*) to recommend to the Staff Selection Committee the names of teachers to be deputed for training.

64. *Delegation of powers and duties.*—(1) The Administrative Officer may delegate to his assistants the powers mentioned in the sub-joined statement to the extent and subject to the conditions specified therein:—

Serial No.	Designation of the Administrative Officer's assistants.	Nature of power delegated.	Extent of delegation.	Conditions.
1	Assistant Administrative Officer of the beat.	(1) Power to sanction casual leave to Attendance Officers, and head teachers in his beat.	Not exceeding 7 days at a time.	
		(2) Power to sanction privilege or earned leave or leave on medical certificate to head teachers and primary school teachers.	Not exceeding two months at a time.	The leave must be certified as admissible by the Accountant of the School Board. A report of the leave so sanctioned shall at once be made to the Accountant of the School Board and the Administrative Officer.
2	Office Superintendent.	Power to sanction casual leave to School Board clerks and peons.	Not exceeding 5 days at a time.	
3	Head Clerk (if there is no office Superintendent).	Power to sanction casual leave to School Board clerks and peons.	Not exceeding 5 days at a time.	
4	Head Teachers ..	Power to sanction casual leave to assistant teachers and peons.	Not exceeding 7 days at a time.	

(2) The Administrative Officer may at any time withdraw any or all of the powers so delegated.

65. *Securities to be furnished by the Administrative Officer.*—(1) The Administrative Officers who are appointed by Government and who handle money shall furnish security in favour of the Governor of Bombay, as follows:—

	Rs.
(*i*) Administrative Officers in Bombay Educational Service Class II.	2,000
(*ii*) Administrative Officers other than those specified in clause (*i*).	1,000
(*iii*) Assistant Administrative Officer (in cases in which the power to make disbursements has been delegated to him).	(Half of the amount prescribed for the Administrative Officer of the School Board concerned).

(2) The Administrative Officers appointed by municipalities which are Authorised Municipalities and which are empowered under section 22 (*1*) of the Act to appoint

such Administrative Officers who handle money shall furnish security in favour of Authorised Municipality concerned, as follows, namely :—

	Rs.
(*i*) Administrative Officers whose maximum pay exceeds Rs. 300.	2,000
(*ii*) Administrative Officers whose maximum pay does not exceed Rs. 300.	1,000
(*iii*) Assistant Administrative Officer (in cases in which the power to make disbursements has been delegated to him).	(Half of the amount prescribed for the Administrative Officer of the School Board concerned).

B—Duties of the staff maintained by a District School Board or Authorised Municipality.

66. *Duties of the Assistant Administrative Officer.*—The Assistant Administrative Officer shall—

(*a*) assist the Administrative Officer in the performance of the Administrative Officer's duties so far as his beat is concerned;

(*b*) further exercise such powers as may be delegated and perform such duties as may be assigned to him by the Administrative Officer with regard to educational matters in his beat;

(*c*) subject to the instructions of the Administrative Officer, supervise the work done by the Attendance Officers and primary school teachers in his beat and be responsible for their conduct, discipline and efficient work and may recommend transfers of teachers.

67. *Duties of Supervisors and engineering staff.*—(1) It shall be the duty of the Supervisor to do such work connected with primary education, including craft and physical education, as may be entrusted to him by the Administrative Officer. In particular the Supervisor shall assist in—

(*a*) the inspection of such schools as may be assigned to him;

(*b*) visiting schools in his beat with a view to checking their day-to-day working;

(*c*) the organisation of school examinations;

(*d*) the conduct of such enquiries connected with schools as may be entrusted to him by the Administrative Officer or the Assistant Administrative Officer;

(*e*) the organisation of educational conferences or refresher courses with a view to discussion on educational problems or improvement in the class room work; and

(*f*) the work of the Attendance Officer, if in the opinion of the Administrative Officer or the Assistant Administrative Officer such help is necessary in any area where the enrolment and attendance of children are unsatisfactory.

(2) It shall be the duty of the engineering staff to assist the Administrative Officer in the following matters, namely :—

(*a*) maintenace of all school and other buildings belonging to the School Board, in good repair;

(*b*) carrying out annual and special repairs to such buildings;

(*c*) visiting schools if a complaint about their condition is received from the head teacher or supervisor or Assistant Administraitve Officer or Assistant Deputy Educational Inspector;

(*d*) giving advice to the Administrative Officer with regard to the additions, alterations or improvements in existing buildings;

(*e*) preparation of plans and estimates in connection with the alterations in, or extension to, the existing buildings or the construction of new buildings;

(*f*) carrying on negotiations for the purchase or acquisition of sites for school buildings or play grounds;

(*g*) preparation of tender papers for the erection of new buildings or for additions or alterations to the existing buildings ;

and

(*h*) generally to advise District Building Committees in the construction of new school buildings and supervise the building operations.

68. *Duties of Attendance officers.*—Subject to the instructions that may be issued by the Administrative Officer, the Attendance Officer, so far as his beat is concerned, shall be responsible for—

(*a*) the organisation and supervision of the census work and collection of statistics for the preparation of a scheme of compulsion ;

(*b*) the maintenance of a correct and up-to-date census register ;

(*c*) the issue of attendance notices ;

(*d*) the enrolment of all children liable for compulsion in schools within 2 months of the commencement of the school year ;

(*e*) arranging for the receipt of reports about enrolment and attendance from head teachers of all primary schools and submission of monthly reports on attendance to the Administrative Officer ;

(*f*) visiting schools and homes of pupils who are not enrolled or are irregular in attendance or are absent from schools ;

(*g*) issuing of warnings and attendance orders : provided the necessary power has been delegated to him ;

(*h*) the enforcement of compulsory attendance by preparing cases for prosecution and if authorised in this behalf by the Administrative Officer by lodging complaints before a Magistrate, village bench, or other person empowered in this behalf by the District Magistrate ; and

(*i*) such other work including inspection and supervision work as may be assigned to him by the Administrative Officer or Assistant Administrative Officer from time to time.

Note.—The duties of the Attendance Officers are set out in greater detail in Schedule E.

69. *Duties of Clerks.*—(1) *Duties of Office Superintendent.*—The Office Superintendent shall—

(*a*) assist the Administrative Officer in the disposal of all School Board Office work ;

(*b*) subject to the instructions and general control of the Administrative Officer, supervise and control the clerical and inferior staff in the School Board Office and be responsible for their conduct, discipline and efficient work and for the general organisation of the School Board Office ;

(*c*) check the drafts put up, the calculations made, and other work done by the clerical staff in the School Board Office ;

(*d*) himself do such original work of ministerial nature as may be entrusted to him by the Administrative Officer ;

(*e*) open letters, if so authorised by the Administrative Officer, received in the School Board Office and bring important or urgent letters or correspondence to the notice of the Administrative Officer ;

(*f*) if so authorised by the Administrative Officer, sign letters issued from the School Board Office the draft of which has been approved by the Administrative Officer and which are not addressed to the President of the District Local Board, or Authorised Municipality, Educational Inspector or Director of Public Instruction or Government ; and

(*g*) furnish security in favour of the District School Board or Authorised Municipality, as the case may be, the amount of which shall be half of the amount prescribed for the Administrative Officer of the District School Board or the Authorised Municipality.

(2) *Duties of Head Clerk.*—(*a*) Where there is no Office Superintendent or during the absence on leave of the Office Superintendent, the Head Clerk shall perform all duties of the Office Superintendent and furnish security in favour of the District

School Board or Authorised Municipality, as the case may be, the amount of which shall be half of the amount prescribed for the Administrative Officer of the District School Board or Authorised Municipality.

(*b*) Where there is an Office Superintendent the Head Clerk shall—

(*i*) assist the Administrative Officer and the Office Superintendent in the disposal of all School Board work other than the work pertaining to financial matters;

(*ii*) subject to the instructions of the Administrative Officer and Office Superintendent and subject to their general control supervise, control and co-ordinate the work of the clerical staff in the School Board Office other than the accounts staff;

(*iii*) check the drafts put up, the calculations made and other work done by the clerical staff in the School Board Office other than the accounts staff;

(*iv*) himself do such original work as may be entrusted to him by the Administrative Officer or Office Superintendent.

Note.—Where no separate post of Accountant has been sanctioned the head clerk shall be deemed to be accountant and shall perform the duties of both the posts.

(3) *Duties of the Accountant.*—The Accountant of a School Board shall—

(*a*) subject to the instructions given by the Administrative Officer, prepare the annual, revised or supplementary budgets of the School Board and the re-appropriation statements;

(*b*) assist the Administrative Officer—

(*i*) in reporting on the financial effect of all proposals for the expansion of primary education or new items of expenditure,

(*ii*) in answering all objections raised by the Auditors;

(*c*) be responsible for—

(*i*) keeping a constant watch on the progress of the expenditure of the School Board,

(*ii*) arranging for the payment of the salaries and allowances of the staff maintained by a District School Board or Authorised Municipality,

(*iii*) making due payment of all other moneys payable by the School Board,

(*iv*) arranging for the recovery of all moneys due to the School Board,

(*v*) keeping accounts of the articles of dead stock in schools or in School Board Office,

(*vi*) keeping the accounts of the funds of the District Building Committee,

(*vii*) the scrutiny of all bills of expenditure before passing or recommending them for payment,

(*viii*) regulating the keeping of accounts of all receipts and expenditure of the School Board and of provident and pension funds,

(*ix*) keeping up-to-date the service books of all School Board employees,

(*x*) keeping leave accounts of all School Board employees,

(*xi*) preparing pension papers and arranging for the payment of pensions, gratuities and provident funds to all members of the staff of the District School Board or Authorised Municipality, and

(*xii*) for such other School Board work relating to accounts as may be entrusted to him by the Administrative Officer;

(*d*) furnish security in favour of the District School Board or Authorised Municipality, as the case may be, the amount of which shall be half of the amount prescribed for the Administrative Officer of the District School Board or Authorised Municipality.

(4) *Duties of other clerks.*—The remaining School Board clerks shall be responsible for such School Board work as may be allotted to them by the Office Superintendent, Head Clerk, Accountant or Overseer under whom they may be working. The clerks in School Board Office who handle money shall furnish security in favour of the District School Board or Authorised Municipality, as the case may be, the amount of which shall be one-fourth of the amount prescribed for the Administrative Officer of the District School Board or Authorised Municipality.

70. *Duties of Primary School Teachers.*—(1) *Duties of Primary school teachers.*—Subject to such instructions as may be issued by the Administrative Officer, a primary school teacher shall—

(*a*) be primarily responsible for the efficient and effective education including physical education of the pupils in his charge ;

(*b*) attend the school punctually, be present in the school during the appointed school hours and devote his whole attention to teaching or class work and shall not do any private or official work during these hours except that on the last day of the month not more than three hours may be devoted to completing the registers for the month ended and writing out the registers for the ensuing month and preparing such other monthly registers or reports as may be required by the head teacher ;

(*c*) take roll call at the expiry of the first period or hour in each session in the morning or forenoon and in the afternoon or evening ;

(*d*) make all possible efforts to improve the attendance in his school—

(*i*) by inducing the parents of children, especially children of the compulsory age group, to get their children enrolled in school and to attend school regularly,

(*ii*) by establishing personal contact with parents of non-attending children, enquiring about the cause of their absence or irregular attendance, and inducing them to cause their children to attend school regularly ;

(*e*) assist the head teacher and the Attendance Officer in the work pertaining to the census of children and collection of census statistics and serve attendance notices if so required by the Attendance Officer ;

(*f*) collect fees, if any, from pupils in his charge and hand over the amount of such fee collections to the head teacher as directed by him ;

(*g*) be responsible for keeping accurately and neatly the necessary registers and other records as required by the head teacher ;

(*h*) assist the head teacher as required by him, in the general organisation of the school including games and sports, in keeping the school building and premises clean in holding annual or periodical examinations, in arranging extra curricular activities, and in distributing books, slates, educational requirements, milk, meals and clothes to pupils in his charge ;

(*i*) be responsible for inculcating in his pupils habits of cleanliness and neatness and respect for orderly behaviour and participate in activities organised for the purpose ;

(*j*) under the directions of the head teacher, assist the villagers in developing corporate life, in organising festivals, sports and gymnastics in the village and generally improving the condition in the village ;

(*k*) promote communal harmony and good will among his pupils and see that no disability of any kind is imposed on any pupils on the ground of his caste or community ;

(*l*) abstain from taking active interest in any political or communal organisation or from canvassing in support of any candidate for any election in the area of the District School Board or Authorised Municipality ;

(*m*) not join any association or union of teachers or of teachers and others or take part in the activities of any such body unless the association or union is recognised by Government ;

(*n*) perform such other duties or conform to such other instructions relating to primary education as may be required of or be issued to him by the Administrative Officer or the head teacher.

(2) *Duties of Head Teacher.*—In addition to his duties as a primary school teacher in respect of the class or classes taught by him personally, a head teacher of a primary school, subject to such instructions as may from time to time be issued by the Administrative Officer, shall—

(*a*) be generally responsible for the efficient and effective education including physical education of all pupils in his school ;

(*b*) attend the school punctually, be present in the school during the appointed school hours, devote his whole attention to the school work and shall not do any private work during the school hours;

(*c*) be responsible for ensuring that the school property of every description is properly cared for and for keeping the school premises clean and tidy. Any damage done to such property should be reported by the Head Master, to the Administrative Officer or the village or Municipal School Committee. If so authorised by the Administrative Officer, he should carry out repairs to the school building and keep proper accounts of the expenditure incurred on that account;

(*d*) be responsible for the arrangement of pupils in their classes and for their promotion to higher standards according to their progress during the year and the results of the annual examination;

(*e*) be accountable for any undue stagnation especially in lower standards;

(*f*) make all possible efforts to improve attendance in his school by—

(i) inducing the parents of school-going children to get their children enrolled in schools and to attend school regularly,

(ii) establishing personal contact with parents of non-attending children, enquiring into the cause of their absence or irregular attendance, and inducing them to cause their children to attend the school regularly;

(*g*) assist the attendance officer of the beat in enforcing attendance of school-going children by—

(i) reporting to him the absence of any school-going child who has not been exempted from attendance or granted leave of absence under these rules,

(ii) sending a report to him by the 5th of every month about the names of all non-attending children who have not been exempted from attendance or granted leave of absence under these rules and of the names of all children to whom a scheme of compulsion applies and who joined and left the school in the preceding month,

(iii) serving attendance notices or orders if so required by the Attendance Officer;

(*h*) be responsible for the collection and safe-custody of school fees and fines and other moneys received in the school till the time of their remittance to the Taluka teachers. (Such fees, fines or moneys shall be remitted by the head teacher to the Taluka teacher before the end of every month or earlier if possible);

(*i*) prepare pay bills for the school and send them to the Taluka master before such date as may be specified by the Administrative Officer in this behalf;

(*j*) be responsible for the disbursement of pay to his assistants immediately on receipt of such pay from the Taluka teacher;

(*k*) grant leaving certificates or extracts from the general register to the pupil or his parent on application and on the payment of prescribed fee, if any;

(*l*) prepare the time-table of the school every year;

(*m*) be responsible for the proper maintenance of all school registers and records;

(*n*) be responsible for the general organisation of the school including games and sports, for holding annual or periodical examinations, for arranging extra-curricular activities and for distributing books, slates, educational requisites, milk, meals or clothes to school children;

(*o*) deal with all correspondence in connection with the school in his charge ;

(*p*) supervise, control and coordinate the work of his assistants, be responsible for their efficiency and discipline and report forthwith to the Administrative Officer through the Assistant Administrative Officer, if any, cases which may come to his notice of misconduct or breach of discipline among his assistants ;

(*q*) inculcate in pupils attending his school habits of cleanliness and neatness and be responsible for their conduct and discipline ;

(*r*) promote communal harmony and good will among pupils in his school and ensure that no disability of any kind is imposed on any pupil on the ground of his caste or community ;

(*s*) abstain from taking active interest in any political or communal organization or from canvassing in support of any candidate for any election in the area of the District School Board or Authorised Municipality ;

(*t*) not join any association or union of teachers or of teachers and others or take part in the activities of any such body unless the association or union is recognised by Government ; and

(*u*) perform such other duties or conform to such instructions relating to primary education as may be required of or issued to him by the Administrative Officer.

(3) *Duties of Taluka Teachers.*—In addition to his duties as a primary school teacher or head teacher, as the case may be, a Taluka teacher, subject to such instructions as may, from time to time, be issued to him by the Administrative Officer, shall—

(*a*) be responsible for collecting the pay bills of all schools in the Taluka and forwarding them to the Administrative Officer before such date as may be specified by the Administrative Officer in this behalf ;

(*b*) be responsible for cashing the cheques or cash orders in regard to the pay and other bills of all schools in the Taluka and for disbursing the pay and other bills ;

(*c*) forward to the Government Treasury every month before such date, as may be specified by the Administrative Officer in this behalf, collection of fees, fines and other moneys received from the head teachers in the Taluka in the preceding month, pass receipts to the head teachers concerned, send the treasury receipts to the Administrative Officer and keep the duplicate receipt for his record ;

(*d*) be responsible for the distribution of orders, circulars, books, stationery, furniture, equipment etc., received from the School Board Office among the primary schools in the Taluka in accordance with the instructions given to him ;

(*e*) furnish in favour of the District School Board security of Rs. 400 ; and

(*f*) perform such other duties or conform to such instructions as may be required of or be given to him by the Administrative Officer.

Note.—To enable the Taluka teacher to discharge his duties efficiently, he shall be given light charge of duties as head teacher or primary school teacher as the case may be.

C—Procedure for Appeals.

71. *How appeal to be submitted.*—(1) Every appeal under sub-section (2) of section 24 of the Act shall be duly signed by the appellant and shall be submitted to the tribunal in triplicate by registered post, through the Administrative Officer so as reach the Administrative Officer within 30 days of the date of the order appealed against.

(2) Every appellant shall submit his appeal separately and no joint appeal shall be entertained.

(3) No advance copy of the appeal shall be sent to an officer or authority higher than the Administrative Officer.

72. *Contents of the Appeal.*—(1) Every appeal shall—

(*a*) contain all material statements and arguments relied on by the appellant;

(*b*) contain no disrespectful or improper language;

(*c*) be accompanied by a copy of the order appealed against; and

(*d*) in all other respect, be complete in itself.

(2) The appeal may be submitted in the regional language or English, as the appellant deems fit.

73. *Action to be taken by the Administrative Officer.*—(1) The Administrative Officer shall forward separately to the Chairman of the School Board and to the Educational Inspector, together with his remarks, if any, a copy of every appeal received by him, within 21 days from the date of its receipt.

(2) The Administrative Officer shall also forward to the Educational Inspector along with the copy of the appeal all the relevant papers relating to the order appealed against.

(3) The Administrative Officer shall furnish the tribunal with such other papers and information as the Tribunal may call for.

(4) It shall be the duty of the Administrative Officer to be present at all meetings of the Tribunal, to answer all questions which may be put or be allowed to be put by the tribunal and furnish such information as the Tribunal may require.

(5) The Administrative Officer shall give effect to an order passed by the Tribunal.

74. *Perusal of case papers and fixing date for meeting of the Tribunal.*—(1) On receipt of a copy of the appeal and the case papers from the Administrative Officer, the Educational Inspector shall peruse and as soon as possible pass them on to the Chairman of the School Board without any comments and fix in consultation with the Chairman the date of the meeting of the Tribunal for deciding the appeal.

(2) The Chairman shall return the case papers to the Educational Inspector without any comments at least a week before the date fixed for the meeting of the Tribunal.

75. *Meetings of the Tribunal.*—(1) The Tribunal shall ordinarily meet once in every three months, provided that there are appeals to be decided at such meeting.

(2) The meeting of the Tribunal shall be held in the office of the Chairman of the School Board or at such place, at the Head Quarters of the District, as may be agreed upon by the Chairman and the Educational Inspector.

(3) The date, time, agenda and place of the meeting shall be fixed by the Educational Inspector in consultation with the Chairman and shall be communicated by the Educational Inspector to the Chairman, the Administrative Officer and the appellant concerned, at least ten days before the date of the meeting.

76. *Appellant to attend the meeting.*—(1) The appellant shall attend the meeting of the tribunal, unless exempted by it from such attendance, on the day and at the time and place communicated to him by the Educational Inspector and shall answer all such questions as may be put by or allowed to be put by the tribunal and shall supply such information as may be required by the tribunal.

(2) The appellant shall not be entitled to appear by a pleader or any other representative before the tribunal.

(3) The appellant shall not be entitled to any travelling allowance for the journeys made by him for attending the meeting except as printed in rule 78.

77. *Tribunal to record statements and answers.*—The Tribunal may, if it considers necessary, record any statements made or any answers to any questions given by the Administrative Officer or the appellant. Such statements or answers shall be recorded in the regional language or, if the appellant understands English, in English. They shall be read out to the Administrative Officer or the appellant, as the case may be, and if necessary, explained to him and signed by the Chairman and the Educational Inspector.

78. *Decision on appeal.*—While deciding the appeal, the Tribunal shall consider—

(*a*) whether the facts on which the order of the Administrative Officer was based have been established;

(*b*) whether the facts established afford sufficient grounds for taking action; and

(*c*) whether the penalty imposed by the Administrative Officer is excessive, adequate or inadequate,

and may pass such order as it thinks proper either directing a fresh inquiry by the Administrative Officer or confirming, reversing, annulling or modifying the order passed by the Administrative Officer. In passing such order the Tribunal may also direct whether the applicant should be paid travelling allowance and/or whether he should be treated as on duty while attending the meeting of the Tribunal. Every order passed by the Tribunal shall be signed by the Chairman and the Educational Inspector.

79. *Reference to the Director.*—In the event of any difference of opinion between the Chairman of the School Board and the Educational Inspector, the Educational Inspector shall forthwith report the case to the Director, together with the statement of facts and the points on which the difference arose.

80. *Custody of appeal papers.*—Until an appeal is decided the Educational Inspector shall have custody of all papers and documents relating to the appeal. As soon as the appeal is decided, the Educational Inspector shall forthwith return to the Administrative Officer all the papers received by him from the Administrative Officer in connection with the appeal.

81. *Clerk in Educational Inspector's Office to do clerical work.*—The clerical work of the Tribunal shall be done by a clerk from the office of the Educational Inspector.

82. *Second appeal by guaranteed teacher.*—(1) A guaranteed teacher who is aggrieved by the order passed by the Tribunal and who desires to make a further appeal to Government under the proviso to sub-section (*2*) of section 24 of the Act, against any order of removal or dismissal shall submit his appeal to Government, through the Administrative Officer in accordance with the provisions of rules 71 and 72.

(2) The Administrative Officer shall forward every such appeal to the Educational Inspector together with his remarks, if any, and all the relevant papers within 21 days from the date of its receipt by him.

(3) The Educational Inspector shall forward every such appeal with his remarks thereon and all the relevant papers to Government through the Director within 21 days from the date of its receipt by him.

(4) The Director shall, as soon as may be convenient and not later than three months from the date of receipt by him, forward every such appeal and all the relevant papers to Government with his own remarks, if any.

(5) Government may pass such order as it considers proper on such appeal confirming, reversing, annulling or modifying the order passed by the tribunal.

(6) The Administrative Officer shall give effect to the order passed by Government.

83. *Transitory provision.*—Nothing in the foregoing rules shall operate to deprive any member of the staff of the District School Board or Authorised Municipality of any right of appeal which he would otherwise have had under the Bombay Primary Education Rules, 1924, in respect of any order passed before the date on which these rules come into force. An appeal pending at the time when, or preferred after, these rules come into force by such member in exercise of such right shall be dealt with according to the rules in force before the date on which these rules come into force.

CHAPTER VI.

Preparation and Enforcement of the Schemes of Compulsion.

A—Preparation of Schemes of Compulsion.

84. *Preparation of a rough estimate of a scheme.*—(1) When it is proposed to prepare a Scheme of compulsory primary education for any area within the limits of a District School Board under section 25 of the Act, the Director shall require the Administrative Officer of the said Board to prepare a rough estimate of such scheme in accordance with the directions given by him in this behalf and to submit such rough estimate to him for the approval of Government within a specified period. It shall be the duty of the Administrative Officer to prepare such rough estimate in accordance with the directions given by the Director and submit to the Director such rough estimate within the specified period. The Administrative Officer shall also send a copy of such rough estimate to the District School Board and communicate to the Director any comments or suggestions made by the Board thereon.

(2) When an Authorised Municipality proposes to introduce compulsory primary education up to any standard in the whole or any part of its area or is called upon to do so by Government under sub-section (2) of section 26 of the Act, it shall prepare, in consultation with its School Board, and submit for the approval of Government a rough estimate of the scheme proposed to be framed by it for the purpose so as to reach the Director at least one year and a half before the date proposed for the actual introduction of compulsion.

(3) The rough estimate of the scheme to be submitted under sub-rule (1) or (2) shall be prepared in Form C prescribed in Appendix B to these rules.

(4) Government may approve the rough estimate submitted under sub-rules (1) and (2) with or without such modifications as it deems necessary.

85. *Preparation of detailed scheme.*—As soon as the rough estimate of the scheme is approved by Government, and the fact of such approval is communicated to the District School Board or Authorised Municipality concerned, the Administrative Officer of such District School Board or Authorised Municipality shall prepare and submit through the Director for the sanction of Government detailed proposals in Form H prescribed in Appendix B to these rules for each item of the additional expenditure involved in the scheme so as to reach the Director not later than four months after the receipt of the communication conveying Government's approval of the rough estimate.

86. *Organisation of census of children.*—Before preparing a detailed scheme of compulsion and every year after the introduction of compulsion, the School Board shall cause a census to be taken of all children in the area in which compulsion is proposed to be or has been introduced. For this purpose, the Administrative Officer shall in accordance with such directions as may be given by the Director arrange—

(*i*) to fix and notify the dates on which such census is proposed to be taken;

(*ii*) to appoint the necessary enumerators and supervising enumerators, to assign specific villages or areas to each of them and to explain to them the work which they are expected to do;

(*iii*) to get, as accurately as possible, particulars of each child filled in the census form given in Form A prescribed in Appendix B to these rules; and

(*iv*) to get the census work supervised and checked by the attendance officers.

87. *Entry of name and date of birth of a child.*—(1) The name and date of birth of a child given in the census form over his signature or thumb impression by the parent shall be taken as correct and entered in the census register and the general register of the school: provided that if at the time of admission to the school or in response to the notice issued to him under rule 92, the parent of the child disputes the correctness of such date and furnishes under his signature or thumb impression a different birth date and produces proof in support of his statement, the head teacher of the school shall refer the matter to the Chairman of the School Board who, on the recommendation of the Administrative Officer, shall decide which of the two dates shall be entered in the census and general registers and such date shall then be entered in such registers.

(2) The name and date of birth entered in the registers under sub-rule (1) shall not be altered except with the sanction of the Chairman and on the recommendation of the Administrative Officer.

88. *Preparation and publication of a census register.*—(1) Immediately after the census work is completed, the Administrative Officer shall, in accordance with such directions as may be given by the Director, arrange with the help of the enumerators, supervising enumerators and attendance officers to get prepared for each village or ward of a town or city—

(*a*) a census register of all children of the ages to whom the scheme applies, already attending approved schools in Form B prescribed in Appendix B to these rules, and

(*b*) a list of all children of the ages to whom the scheme applies not attending any approved school in Form C prescribed in Appendix B to these rules.

(2) The registers and lists prepared under sub-rule (1) shall then be published.

Explanation.—The registers and lists shall be deemed to have been published—

(*a*) in a municipal area, if the registers and lists are kept open for inspection during working hours in the office of the School Board or of the Municipality and

an announcement is made in any newspaper having circulation in such area or by beat of drum that the registers and lists are kept open for inspection at such places during such hours,

(*b*) in any other area, if the registers and lists are kept open for inspection during working hours at any school in such area and an announcement is made by beat of drum that the registers and lists are kept open for inspection at such places during such hours.

89. *Fixing of maximum distance from School.*—Before a detailed scheme is prepared the School Board shall, on the recommendation of the Administrative Officer, fix the maximum distance measured according to the nearest road between an approved school and the residence of a child for purposes of clause (*c*) of section 33 of the Act. Such distance shall not ordinarily exceed one mile and may be different for different localities and may be less than a mile in the case of villages where communications are specially difficult throughout the year.

90. *Forms for the preparation of detailed scheme.*—After the preliminaries set out in the foregoing rules are completed, the Administrative Officer of a District School Board in accordance with the directions given by the Director and an Authorised Municipality in consultation with the Municipal School Board shall prepare a detailed scheme giving the particulars mentioned in section 27 of the Act and in Form H prescribed in Appendix B to these rules on the basis of the information for each individual village or non-authorised or authorised municipality collected in Form I prescribed in Appendix B to these rules.

91. *Submission of a detailed scheme to Government.*—(1) The Administrative Officer of a District School Board shall send two copies of the detailed scheme to the Director within the period specified in rule 85 and send another copy thereof to the District School Board. The District School Board shall offer its comments and suggestions, if any, upon the scheme within two months. If the District School Board does not offer its comments or suggestions within this period, it shall be assumed that the District School Board concurs in the scheme.

(2) The Authorised Municipality shall forward the detailed scheme to the Director in duplicate together with a copy of the resolution of the Municipality agreeing to bear its share of the additional recurring and non-recurring cost within the period specified in rule 85.

B—Enforcement of attendance under the scheme.

92. *Issue of attendance notices.*—(1) The Administrative Officer shall cause a notice to be issued in Form D given in Appendix B to these rules to the parent of every child of the ages to whom a scheme applies not attending any approved school directing him to cause the child to attend an approved school on or from a date which shall be specified in the notice. Such notice shall be given to every such parent not less than two months before the day on or from which the child must first attend the school.

(2) The notice under sub-rule (1) may be served by its delivery to the parent personally or with the previous permission of the Administrative Officer or the Attendance Officer may be affixed on the premises last occupied by the parent.

93. *Particulars of attendance notices to be communicated.*—The head teacher of each approved school in the area of compulsion shall be informed of the names and

other particulars of all children whose parents have been ordered to cause them to attend his school and of the date from which the attendance of such children is compulsory.

94. *Application for exemption from attendance.*—On receipt of the attendance notice under rule 92 if a parent wishes that his child or ward be exempted from attending a school for any of the reasons mentioned in Section 33 of the Act, he shall apply for such exemption to the Attendance Officer concerned through the head of the school which the child is required to attend.

95. *Grant of exemption from attendance or leave of absence.*—(1) If the exemption applied for under rule 94 is of a permanent nature, the Attendance Officer shall call the parent applying for exemption before—

(*a*) a village school committee constituted under Chapter XI of these rules, or

(*b*) in the area of a non-authorised municipality, a school committee, if any, constituted by such non-authorised municipality to assist the District School Board in the management of primary schools in its area, or in the absence of such a Committee, before a committee constituted by the District School Board for such non-authorised municipal area under sub-section (2) of section 61 of the Act, or

(*c*) in the area of an authorised municipality before the Committee appointed by the School Board to deal with such applications, and hear what he has to say and then in consultation with such Committee forward the application to the Administrative Officer with his recommendation whether the exemption be granted or not.

(2) If the exemption applied for is of a temporary nature the head of the school may grant such exemption and also leave of absence for a period not exceeding 7 days at a time—

(*a*) when the child is ill ; or

(*b*) when any other member of his family is ill or disabled and the attendance of the child is required at home ; or

(*c*) when his absence is specially required by the parent or the guardian to help him in his vocation ;

and report the fact to the Attendance Officer concerned.

(3) If the period of exemption from attendance or leave of absence exceeds 7 days the head teacher shall forward the application to the Attendance Officer who may grant such exemption or leave of absence for a period not exceeding 15 days in all at a time for any of the reasons given in sub-rule (2).

(4) If the period of exemption from attendance or leave of absence exceeds 15 days at a time the Attendance Officer shall forward the application with his remarks to the Administrative Officer who may grant such exemption from attendance or leave of absence not exceeding 30 days at a time for the reasons given in sub-rule (2).

(5) Exemption from attendance or leave of absence for a period exceeding 30 days shall only be granted by the School Board.

96. *Report of Absence.*—(1) If any child liable to attend a school does not attend school as directed in the notice issued under rule 92 and if such a child has not been exempted from attendance or granted leave of absence under rule 95 the head teacher shall at once send a report of the fact to the Attendance Officer.

(2) The head teacher shall, not later than the 5th day of every month, report to the Attendance Officer and the Administrative Officer—

(*a*) the names of all children who have not attended his school without any leave of absence granted to them and stating against their names the causes of their absence from school as ascertained by him after contacting the parents of such children ; and

(*b*) the names of children of the ages to which compulsion applies who have joined and left his school during the preceding month.

97. *Issue of attendance orders.*—(1) On receipt of a report about the unauthorised absence of a child from a head teacher under rule 96, the Attendance Officer shall contact the parent of such a child, hear what the parent has to say about the absence of the child and after such enquiry as he considers necessary may, if authorised by the School Board, issue an attendance order in Form E in Appendix B to these rules directing the parent to cause such a child to attend an approved school on and from a date which shall be specified in the order.

(2) In the absence of the Attendance Officer or if the Attendance Officer is not so authorised by the School Board, the Administrative Officer if authorised by the School Board may after giving the parent an opportunity of being heard and after such inquiry as he considers necessary issue an attendance order under section 34 of the Act to the parent concerned.

98. *Filing of complaints against defaulting parents.*—If the parent to whom an attendance order has been issued fails to cause his child to attend an approved school on or after the date specified in the attendance order, the Attendance Officer shall on receipt of a report about the absence of such a child from the head teacher of the school if so authorised by the Administrative Officer, file a complaint to that effect in Form F given in Appendix B to these rules with a Magistrate, village bench or the person empowered in this behalf by the District Magistrate, as the case may be.

99. *Report about the removal of a child or his parent to another place.*—If the parent of a child liable for compulsion who is attending an approved school removes the child from the town or village or ward of a city in which he or it is residing the head teacher of the school which the child attends shall inform the Attendance Officer and also the Administrative Officer of the removal of the child. If the removal is to another area of compulsion the Administrative Officer shall take steps through the Administrative Officer of such area to ensure that the prescribed notice is served on the parent requiring him to cause the child to attend an approved school within that area. It shall be the duty of the Administrative Officer to check or cause to be checked at least 5 per cent. of the removals from the area of compulsion during each year in respect of each school.

100. *Action against a person employing a child liable for compulsion.*—If a head teacher or an Attendance Officer comes across the case of a child liable to attend school compulsorily having been employed by a person as to interfere with the education or instruction of such child, a full report giving particulars of such person and the child employed shall be forthwith made to the Administrative Officer who shall then cause a warning to be issued to such a person against the employment of the child. If the warning has no effect, the Administrative Officer shall cause a complaint to be lodged against the person concerned in a Court of Law.

101. *Census of children to be taken every year in an area of compulsion.*—In any area in which compulsory primary education upto any standard has been introduced,

a census of all children shall be held every year in accordance with rule 86. At a subsequent census (*i*) the particulars of each child already filled in the census form at the preceding census shall be verified and if any modification excepting the change in the name or the date of birth of the child is found to be necessary such modification may be made in the old census form and duly initialled by the enumerator or a new census form got filled and signed by the parent of such a child and (*ii*) particulars of all children who are likely to be within the ages to which the scheme will apply at the commencement of next academic year and who were not enumerated at any previous census shall be filled in the prescribed form.

102. *Revision of the Census Register from time to time.*—It shall be the duty of the Attendance Officer to keep in his charge as a permanent record the census register prepared under rule 88 for every village or ward of a town corrected up to date by (*i*) adding from time to time the names of all children from the lists of non-attending children as soon as such children have been enrolled in approved schools and of other children of the ages to which the scheme applies who were for any reason not enumerated at the time of the census or who came to reside in the compulsory area after the census and have been enrolled in approved schools now and (*ii*) removing from it from time to time the names of all children who have been reported by head teachers to have left approved schools or been removed to areas outside the compulsory area or who have ceased to be under the scheme of compulsion for any valid reason such as (*a*) death, (*b*) completing the compulsory course, (*c*) completing the school year after completing the maximum age to which the scheme applies or (*d*) being exempted under section 33 of the Act. The Census Register shall also be revised on the basis of the census taken every year in the area of compulsion.

CHAPTER VII.

Approved Schools.

A—Preliminary.

103. *Approved schools to conform to rules 122 to 140.*—Every approved school shall conform to the conditions prescribed in rules 122 to 140 of these rules.

Provided that the Deputy Educational Inspector of the District may direct that all or any of the said conditions shall not apply to any particular school or a class of schools in any locality.

104. *Opening of new primary schools by the School Board.*—(1) A District School Board shall not open a new primary school or take over a private school or incur additional expenditure on primary schools maintained by it without the sanction of Government or an officer authorised by Government in this behalf.

(2) Except as otherwise provided in these rules, a Municipal School Board may, subject to the provision made in its budget, open new primary schools wherever necessary or take over private schools or incur additional expenditure on primary schools maintained by the authorised municipality.

B—Recognition of and grant-in-aid to private schools.

105. *Maintenance of a register of approved schools.*—Every School Board shall maintain in such form as may be specified by Government from time to time a register of private schools which have been recognised as approved schools for the purposes of the Act

106. *Application for recognition.*—(1) Application for the recognition of a private school as an approved school shall be made to the Deputy Educational Inspector of the District in which the school is situated.

(2) Such application shall be made after the school has been actually started and has been in existence for at least three months and shall be accompanied by a statement in Form A prescribed in Appendix C to these rules and an undertaking in writing that the conditions of the employment of teachers in the school shall as nearly as may be those specified in Schedule F. No application which is made after the 1st November shall be entertained for the year.

(3) Every approved private school shall have a manager or a correspondent whose name and address shall be communicated to the School Board. Any change in the name and address of the manager or correspondent shall forthwith be reported to the School Board.

107. *Recognition of private school.*—(1) As soon as may be convenient after the receipt of an application under rule 106, the Deputy Educational Inspector of the District in which the School is situated shall arrange for the inspection of the school and shall forward the inspection report to the school board together with his recommendations about the recognition of, and the grant-in-aid, if any, payable to, the school.

(2) The school board shall consider the inspection report and the Deputy Educational Inspector's recommendations thereon ordinarily at the next meeting and may, if it is satisfied about the need of the school in the locality, the standard of work in, and the general management of the school, recognise the school as an approved school and may, if the school also applies for grant-in-aid, direct that it should be treated as eligible for grant-in-aid from the Primary Education Fund.

(3) A School Board may, for reasons recorded in writing, reject an application for recognition. The Administrative Officer shall forthwith communicate the decision to the Manager or correspondent of the school:

Provided that a school which has been refused recognition by the School Board may submit an appeal to the Educational Inspector of the Division whose decision shall be final:

Provided further that nothing in these rules shall be deemed to prevent a school which has been refused recognition from submitting a fresh application for recognition in the next academic year.

108. *Benefits of recognition.*—(1) Every private school which has been recognised as an approved school shall be entitled to a grant, if it applies for such a grant, according to the provisions of rules 115, 116, 117 and 118 unless the School Board, on the recommendation of the Deputy Educational Inspector, directs that such grant shall not be paid to it.

(2) Recognition as an approved school shall also entitle the managers of the school:—

(*a*) to present its pupils at any public examination conducted by the Education Department of Government;

(*b*) to present its pupils as candidates for scholarships and to admit scholarship holders, and

(*c*) to claim such other benefits as Government may, from time to time, declare in this behalf.

109. *Withdrawal of recognition.*—(1) A private school which is once recognised as an approved school shall continue to be so recognised unless its recognition is withdrawn under sub-rule (2).

(2) Such recognition may, at any time, be withdrawn by the School Board on the recommendation of the Deputy Educational Inspector, if any of the conditions on which the school was recognised is not observed, or if the standard of instruction in the school falls materially below the level obtaining in public schools or if a public school is opened in the same locality and another school is not considered necessary or for other reasonable and sufficient cause :

Provided that due warning has been given to the managers of the school and that reasonable time has been allowed to them to carry out the requirements of the School Board :

Provided further that a school which is aggrieved by the decision of the school board withdrawing recognition may submit an appeal to the Educational Inspector of the Division whose decision shall be final.

110. *Application for grant-in-aid to a private school.*—(1) Application for grant-in-aid to a private school may be made simultaneously with the application for recognition or after the receipt of recognition. Such application, shall be addressed to the Deputy Educational Inspector of the District in which the school is situated. No application which is made after the 1st November shall be entertained for the year.

(2) As soon as may be convenient after the receipt of such application, the Deputy Educational Inspector shall forward to the School Board an inspection report on the school together with his recommendations about the amount of grant-in-aid to be paid to it.

(3) The School Board shall consider the inspection report and the Deputy Educational Inspector's recommendations ordinarily at the next meeting and shall, unless the school is subject to the disqualifications enumerated in sub-rule (2) of rule 111 ordinarily direct that it should be aided from the Primary Education Fund :

Provided that the School Board may refuse to grant such aid to any school if there is already in the locality an approved school classified as a public school which meets the needs of that locality :

Provided further that a school which is aggrieved by the decision of the school board under the first proviso may submit an appeal to the Educational Inspector of the Division whose decision shall be final.

111. *Refusal of grant-in-aid.*—(1) An approved private school which is once aided from the Primary Education Fund shall continue to be so aided unless the school board, on the recommendation of the Deputy Educational Inspector, directs that such aid should cease.

(2) Such direction may be given by the School Board on any one or more of the following grounds :—

(*a*) If the school is conducted for profit :

Explanation.—A *bona fide* teacher conducting a school and receiving a reasonable remuneration for his services as a teacher in the school shall not be deemed to be conducting the school for profit ;

(*b*) If the school, being the only school of its kind in the locality, makes attendance at religious instruction of a particular denomination compulsory for pupils ;

(*c*) If it does not pay to its teachers the minimum scales of pay and allowances approved by the Director in this behalf ;

(*d*) If it does not as nearly as may be possible observe the conditions of employment of teachers of private schools as laid down in Schedule F ;

(*e*) If it does not produce at the time of inspection a certificate from a registered accountant that its accounts have been verified and found correct :

Provided that this certificate shall not be demanded from a school which is in receipt of grant of less than Rs. 500 a year ;

(*f*) If, having been awarded grants for three consecutive years, it does not maintain at least the first four standards, unless it serves as a feeder school in the same locality, village or town, or it is exempted from this requirement by the Educational Inspector in special circumstances which shall be stated in writing ;

(*g*) If the teachers or pupils in the school take part or subscribe in aid of or assist any political or communal movement which leads directly or indirectly to excite disaffection against or embarrasses Government or promotes feelings of hatred or enmity between different classes or disturbs public peace or embarrasses the school board :

Provided that before giving such direction due warning shall be given to the school and reasonable opportunity given to it to carry out the requirements of the School Board :

Provided further that a school which is aggrieved by the direction of the school board refusing grant-in-aid on this ground may submit an appeal to the Educational Inspector of the Division whose decision shall be final.

112. *Allotment of grant-in-aid.*—All grants to approved private schools shall be subject to the provision made for the purpose in the budget of the District School Board or authorised municipality, as the case may be.

113. *Assessment and payment of grant.*—(1) The grant payable to an approved private school shall be assessed by the inspecting officers appointed by Government under section 48 (*1*) of the Act.

(2) The actual amount of grant to be paid to an approved private school, other than a practising school, shall be determined by the Administrative Officer after considering the recommendations of the inspecting officer. Such grants shall be paid by the Administrative Officer on behalf of the School Board. The cases of the schools which are being considered for a grant-in-aid for the first time or which are to be removed from the list of aided approved schools shall be placed before the School Board.

114. *Conditions for assessment of grants.*—In assessing the grant payable to an approved private school, the inspecting officer shall consider with due regard to the special circumstances of the school and its locality—

(*a*) whether the instruction given is sufficient in range and quality ;

(*b*) the extent to which the conditions on which the school was recognised are fulfilled ;

(*c*) whether the registers and records are duly maintained as required in rule 139 of these rules ;

(*d*) whether the teaching staff is adequate and qualified :

Explanation.—The teaching staff should be deemed to be adequate if, on an average, there are not more than 40 pupils per full-time teacher, and

(*e*) whether the members of the staff are paid regularly in accordance with the scales of pay and allowances previously approved by the Director.

115. *Determination of grant-in-aid.*—(1) Normally the grant paid to an approved private school in any year is the grant for that year and shall be calculated on the number of pupils in average attendance in the school during the preceding year :

Provided that grant to an approved private school during the first year of its existence shall be based on the number of pupils in average attendance in school during the first half of the school year. Such grant shall not, however, exceed three-fourths of the estimated expenditure of the school on the pay of its teachers during the year.

(2) The maximum maintenance grant payable to an approved private school shall be limited to—

(*a*) Rs. 12 per pupil in the case of pupils of backward communities and girls, and,

(*b*) Rs. 10 per pupil in the case of other pupils :

Provided that the total grant under this sub-rule to any approved private school shall not exceed its normal admissible expenditure *minus* the fee receipts.

Note (1).—While calculating the maintenance grant payable to an approved private school, it shall be assumed that the proportion of the pupils on the rolls to teachers in the school does not exceed 40 as provided in the Explanation to rule 114(*d*). If the average number of pupils in charge of a teacher in the school exceeds 40, the grant shall be calculated on the assumption that the teacher is in charge of 40 pupils only. For purposes of grant, the number of pupils in excess of 40 in charge of a teacher shall be disregarded.

Note (2).—The normal admissible expenditure under sub-rule (2) does not include any special allowances paid to teachers or any item of expenditure, on account of which special grant may be claimed under rule 117 ;

(3) Subject to the instructions that may be issued by the Director from time to time, educational bodies or associations conducting a number of approved schools shall be entitled to grant on overhead expenditure at three-fourths of their approved expenditure under that head.

Note.—The following items of overhead expenditure are treated as approved expenditure :—

(1) Pay and allowances of the Administrative, Supervising, Clerical and inferior staff ;

(2) Office contingency ;

(3) Stipends to teachers under training at the rates approved by Government ;

(4) Cost of refresher courses for teachers in the employ of the educational bodies or associations ;

(5) Travelling allowance to teachers under training or for attending the refresher courses ;

(6) Pay and travelling allowance to relieving teachers ;

(7) Audit fees ;

(8) Premia on the insurance on the lives of the permanent teachers ;

(9) Contributions to the provident and insurance funds.

The Administrative Officer shall have power to determine what is reasonable expenditure in each case with reference to the items mentioned in this note.

116. *Reduction in the maximum grant.*—(1) In assessing the grant payable to an approved private school, the inspecting officer shall adopt the following procedure of marking :—

	Item.	Marks.
(*i*)	Range and quality of instruction	40
(*ii*)	Staff and their conditions of service	15
(*iii*)	Accommodation	10
(*iv*)	School records	10
(*v*)	Personal cleanliness and discipline of pupils ...	10
(*vi*)	Proportion of the pupils in the higher classes ...	8
(*vii*)	Prompt and effective supply of returns and statistics ...	7
	Total ...	100

(2) In giving marks the inspecting officer shall be guided by such general instructions as may, from time to time, be issued by the Director in this behalf. The inspecting officers shall also pay due regard to the special circumstances of each school and its locality.

(3) A school securing 70 marks and over shall be entitled to the full maximum grant. The grant may be proportionately reduced on the recommendation of the inspecting officer in the case of an approved private school securing a smaller percentage of marks :

Example.—If a school gets 50 marks it will ordinarily be entitled to 5/7ths of the maximum admissible grant.

(4) The marks secured by the schools under each head shall be communicated to the schools for their information.

117. *Other recurring grants.*—In addition to the grants specified in rule 115, special grants shall also be paid to approved private schools to enable them to pay to their teachers special allowances such as dearness, bad climate, backward area or trained teachers' allowances. The rate of such allowances and of the grant to be paid thereon shall be such as Government may from time to time specify. It shall be open to approved private schools to charge a special fee for the payment of these special allowances to their teachers. Such expenditure shall not be treated as normal expenditure nor shall such special fee be taken into account, for purposes of the proviso to sub-rule (2) of rule 115.

It shall further be open to approved private schools to charge a special fee for extra curricular activities. Such a special fee shall not be taken into account for the purposes of the proviso to sub-rule (2) to rule 115. The expenditure incurred on extra curricular activities shall not be held admissible for grant, but a proper account of the income and expenditure from this source shall be maintained separately.

118. *Grants on account of non-recurring expenditure.*—Grant may be awarded to an approved private school on account of buildings and other non-recurring expenditure, provided that the expenditure has previously been sanctioned—

(*i*) by Government in the case of schools in the area of a district school board, and

(*ii*) by both Government and authorised municipality in the case of schools in the area of an authorised municipality.

Such grant shall not exceed one-half of the actual or estimated cost, whichever is less; provided that the building grant shall not exceed Rs. 20 or such other amount as may from time to time be laid down by Government for each pupil who can be accommodated in the building at the rate of 8 square feet of class room area per pupil.

119. *Manner of payment of grant.*—(1) Grant due to an approved private school under these rules shall be paid to it before March 31st of the year in which the grant is due.

(2) Grant payable to approved private schools may, at the discretion of the Administrative Officer, be paid in three instalments. The first instalment of grant not exceeding one-half of the previous year's grant may be paid in August. The second instalment not exceeding 25 per cent. of the total grant likely to be earned by the school may be paid in November. The balance of the total grant earned during the year may be paid before March when the inspection report on it is received;

Provided that no such advance grant shall be paid unless the managers of the schools execute beforehand an agreement to refund the amount in case the school is closed or the recognition of the school is withdrawn before the end of the year. The agreement shall be in Form B prescribed in Appendix C to these rules.

(3) No portion of a grant-in-aid shall be paid to an approved private school if it ceases to exist or to be an approved school before it is inspected.

(4) The amount of grant payable to an approved private school shall be reduced in proportion to the number of months in the year during which the approved school ceases to exist or to be an approved school.

120. *Grant to Practising School.*—(1) The grant payable to a practising school shall be calculated by the Deputy Educational Inspector of the District in which the school is situated.

(2) The maximum grant payable to a practising school shall be equal to the amount admissible under rules 115, 117 and 118 or to one-half of its approved expenditure whichever is greater.

(3) The grant shall be paid by the Educational Inspector of the Division from the allotment placed at his disposal for the purpose by the Director.

Explanation.—For the purposes of this rule, a "practising school" means a primary school which is maintained as part of a training institution aided by Government.

121. *Transitory provision.*—A private school which, on the date on which these rules come into operation, has already been recognised or has been recognised and aided either by the Department or by the School Board shall be deemed to have been recognised or recognised and aided under these rules.

C—Conditions to be observed in approved schools.

122. *Accommodation.*—(1) Not less than 8 square feet of space should be provided in each class room (excluding verandahs) for each pupil on the rolls of the class.

(2) The minimum height of the walls should be 10 feet from the floor to the underside of the tie beam and, in case ceilings are provided, the minimum height of the walls shall be 12 feet from the floor.

(3) A play ground of an adequate size should be provided.

(4) An adequate number of latrines and urinals should also be provided.

123. *Equipment.*—(1) The necessary articles of school furniture, e.g., a chair, a table, a black-board, etc., shall be supplied in each class room.

(2) The necessary text books for the use of the teachers, maps, charts, wall pictures and apparatus shall be supplied.

(3) Books for teachers' and pupils' libraries may be supplied as funds permit.

(4) Books, slates and other materials may, so far as funds are available, be supplied to the children of parents who are unable to provide them.

124. *Subjects, curricula, books, and standard of teaching.*—The subjects, curricula, books and standard of teaching in an approved school shall be such as may, from time to time, be specified by Government but modification in the curriculum may be sanctioned by the Director upon the recommendations of the School Board to suit local requirements.

125. *Attendance.*—(1) In an area of compulsion, attendance in an approved school shall be regulated in accordance with regulations made by the School Board with the sanction of the Director.

Note.—Model attendance regulations in this connection are given in Schedule G for the guidance of the School Boards.

(2) The hours of instruction in an approved school shall be not less than three per diem in the case of pupils of standards I and II, not less than three and not more than five in the case of pupils of standards I and II in basic schools, or schools in which craft is introduced and not less than four and more than six in the case of other pupils. Instruction shall not be given for more than three consecutive hours at a time. These hours, may, with the approval of the Educational Inspector, be reduced in schools where the "Shift System" has been adopted, provided that the hours of instruction shall in no case be less than 3 per diem.

(3) In every approved school, one day in a week shall be observed as a holiday and in addition a half or full holiday may be given on one other day in the week.

(4) The total period of vacations in an approved school shall not be less than three weeks and more than seven weeks in each year. The School Board, after consulting the local school committee, if any, and with the approval of the Educational Inspector, shall fix the number of vacations to be given each year, the period of each and the time at which it may be given; provided that no single vacation shall exceed four weeks in length. The Educational Inspector may sanction a vacation in excess of four weeks or a total period of vacations in excess of seven weeks in any year to suit the special conditions of particular localities or schools.

(5) The School Board shall ordinarily observe all holidays declared as public holidays by Government. It may, with the approval of the Educational Inspector, observe other holidays of local significance either in exchange of, or in addition to, the public holidays, but the total number of holidays in a calendar year [including public holidays but excluding holidays observed under sub-rule (3)] shall not exceed 35 days. Before the end of each calendar year, the School Board shall send to

the Educational Inspector of the Division for his approval a list of holidays proposed to be given by it in the ensuing calendar year :

Provided that the Educational Inspector may, in special circumstances, authorise the School Board to sanction the grant of holidays in excess of 35 days in a calendar year.

126. *Home work.*—No home work shall be assigned to pupils in Standards I and II. For pupils of Standards III and IV suitable home work may be given.

Explanation.—The following may be considered as suitable home work for pupils of Standards III to VII :—

Standards III to V—Half an hour.
Standards VI to VII—One hour.

127. *Fees.*—In an approved school classified as a public school—

(1) no fees shall be charged to pupils in standards I to IV in an area where compulsion has been introduced ;

(2) in an area of compulsion school fees may be abolished in Standards V to VII with the sanction of Government in Government and District School Board Schools and of the authorised municipality concerned in the case of Municipal schools ;

(3) school fees in a non-compulsory area may be also abolished with the previous sanction of Government in the case of District School Board and Government Schools and of the authorised Municipality concerned in the case of Municipal schools.

(4) The following shall be exempted from the payment of School fees in all areas :—

(*a*) all girls in standards I to IV and up to 50 per cent. in standards V to VII ;

(*b*) children of backward communities ;

(*c*) children of Indian soldiers, sailors and airmen who (*i*) are in active service or (*ii*) have died or been incapacitated from active service during the Wars of 1914–18 and 1939–45 ;

(*d*) children of Primary and Secondary teachers whose monthly income from all sources does not exceed Rs. 100.

(5) Indigent children shall be allowed free-studentships if their parents are unable to pay the school fees, provided their cases are recommended by the Local School Committee and/or the Head Teacher. The number of such children shall ordinarily not exceed 30 per cent. of the total number of children in the school excluding those provided for under Clause (4) above.

Note.—Cases in respect of (4) (*a*) and (5) shall be dicided by the Administrative Officer in the case of District School Board schools, by the School Board in the case of Municipal schools and by an officer authorised by the Educational Inspector in the case of Government schools.

128. *Admission of pupils.*—(1) An approved school shall be open to pupils of all castes and communities without any distinction.

(2) No child who has not completed the 5th year of age on the date of admission shall be admitted.

(3) Pupils suffering from any infectious or contagious diseases shall not be admitted.

(4) No admission shall be made after the lapse of two months from the beginning of the school year except with the special permission of the Administrative Officer. A pupil must pay the fee, if any, for the month in which he is admitted irrespective of the date of admission.

129. *Leaving Certificate.*—(1) If a pupil seeking admission has previously attended an approved school, he shall produce a leaving certificate in the form that may be prescribed by Government from the last school attended by him. If he states that such certificate has been refused to him, the Head Teacher of the new school shall inform the Head Teacher of the previous school that the pupil seeks admission into the new school. If no satisfactory explanation of omission to give a certificate is received within a fortnight, he shall admit the pupil provisionally and report the case at once to the Administrative Officer who shall inquire into the matter and communicate the result to the Head Teacher of the new school.

(2) The leaving certificate of a pupil from a State outside the Bombay State shall not be accepted unless it is countersigned by an officer of an appropriate rank (e. g. the Administrative Officer or a gazetted officer in the inspecting line) of the State concerned.

(3) A pupil, as a rule, shall ordinarily be admitted to the standard shown in his leaving certificate. If the pupil wants or his parent wants him to be admitted to a higher standard than the one shown in the leaving certificate, he shall communicate in full the reasons to the administrative officer and obtain his permission.

(4) A leaving certificate shall, for the first time, be granted free of charge by the Head Teacher under his signature to any pupil on his or his parent's application. For every subsequent issue of leaving certificate, a fee of annas four shall be charged.

130. *Age Certificate.*—Every child seeking admission for the first time into an approved school shall produce a certificate of age signed by its parent. In the case of illiterate parents, the certificates shall bear their thumb impression attested by a literate person other than a teacher of the school to which the child seeks admission. The date of birth given in this certificate shall be entered in the school (General) Register. No subsequent change or alteration therein shall be made except with the sanction of the School Board Chairman. In the case of transfer of pupils from one place to another, the age given in the leaving certificate shall be entered in the register of the new school.

131. *Transfer of pupils.*—Transfer of pupils from one school to another in the same locality shall be permitted only within the first two months of the beginning of the school year.

132. *Register entries.*—(1) The name of any pupil except a pupil attending a school in an area of compulsion absenting himself without leave for more than 15 days in a month or with leave for more than three consecutive months, shall be struck off the register.

(2) An extract from the General Register shall be given by the Head Teacher under his signature to the pupil concerned or his parent or guardian on application and on payment of a fee of four annas.

(3) The name of the pupil once entered in the school register shall not be altered without the sanction of the school Board Chirman.

133. *Roll Call.*—Roll call shall be taken at the expiration of the first school period or hour, at both morning and afternoon sessions. All pupils present at the roll call shall be marked P, those absent without leave A, those absent with leave L and those absent from sickness S, or in any other convenient way to suit the locality. Every pupil's attendance or absence shall be clearly shown in ink in the appropriate register.

134. *Punctual Attendance.*—Every approved school shall meet at the hour fixed by the school board in consultation with the village school committee, if any, and with the approval of the Educational Inspector. In order to ensure punctual commencement of work the teachers and pupils shall be present ten minutes before the appointed school hours. Classes shall be arranged and seated and all preparations made for the punctual commencement of work.

135. *Teachers' duties and responsibilities.*—The provisions of rule 70 of these rules regarding the duties and responsibilities of primary school teachers shall apply in the case of primary school teachers serving in approved private schools.

136. *Teachers' Attendance Register.*—A teacher's attendance register shall be kept in each approved school. Each head teacher and his assistants should register their attendance in it daily in ink and attach his initials to the entry. The head teacher shall be responsible for the registration of the daily attendance of pupils and teachers.

137. *Time tables.*—Time tables in accordance with the standards and local requirements shall be prepared every year. Any change therein shall be sanctioned by the inspecting officer. A copy of the time table signed by the head teacher shall be hung up in each class room. The head teacher shall be responsible for seeing that the studies prescribed for each hour are carefully followed. In big schools (e.g. schools with an average attendance of more than 200 pupils) a general time table shall be kept for the whole school.

138. *Annual Examination.*—(1) The head teacher shall be responsible for the annual examination of pupils and for their promotion to higher standards taking into consideration their progress during the year and the results of the annual examination. He shall be held accountable in particular for any undue stagnation of pupils in the lower standards.

(2) If a school teaches only up to the third standard, the annual examination shall be held in such a way that it may be possible for the pupils to join the nearest school teaching the higher standard at the beginning of the first term of that standard (IV).

139. *Registers, records and correspondence.*—(1) Following registers and records shall be kept for each school :—

(1) General Register.

(2) Register of pupils' daily attendance.

(3) Register of teachers' daily attendance.

(4) Dead Stock register.

(5) Register of books, maps and charts.

(6) Monthly returns.

(7) Acquittance roll of monthly payments.

(8) Annual Return to be sent to Administrative Officer.

(9) Outward register or a postage book.

(10) Inward register.

(11) Time Table.

(12) Teachers' Service Books (in the case of an approved private school).

(13) File of Age Certificates and Leaving Certificates.

(14) Visitors' Book.

(15) Masters' Log Book.

(16) Accounts of income and expenditure.

(17) Records of examinations and promotions of pupils, etc.

(18) Other records and registers which are peculiar in the case of a particular school, e.g., account of fees, grant, claims, etc.

(2) Government may from time to time specify the forms in which the registers and records mentioned in sub-rule (1) shall be kept.

(3) The registers and records kept under sub-rule (1) are the property of the school. The General Register No. 1 shall on no account be destroyed. Government will specify from time to time the period for which each of the other registers are to be preserved. If a school is permanently closed, the General Register, shall be handed over to the school board. The Administrative Officer shall maintain a list of General Registers of all schools which have been permanently closed.

(4) The head teacher of an approved school shall be responsible for the punctual submission of all reports and returns, for the neatness and regularity of the registers and for the safe custody of school records.

140. *Miscellaneous*—(1) *Pupils.*—Strict regularity and implicit obedience shall be exacted in schools. Politeness and coutesy shall be inculcated as well as cleanliness of dress and person. The head teacher shall ensure that the pupils behave properly both in and out of school and that they do not participate in or take part in the collection of any fund unless such collection is approved by the School Board.

(2) *Buildings.*—The head teacher shall be responsible for seeing that the school building and premises and school furniture are kept clean and in good order and that they are used only for the purpose for which they are intended. He shall ensure that the school property of every description, e.g. school registeres, books, maps, etc., are properly taken care of.

(3) The school shall, at any time during the school hours, be open to the visits of, or inspection by, the Government inspecting staff or officers of the School Board. It may also be visited by members of the School Board. Idlers and children who are not pupils of the school shall not be allowed during school hours to enter the school premises.

(4) No teacher or pupil shall be allowed to live in any school house or school room unless accommodation is specially provided for their residence on the premises. Where, however, the school premises include outhouses or rooms not required for school purposes, such outhouses or rooms may be occupied with the written permission of the Administrative Officer or an officer authorised by the Administrative Officer if the school is a public school or of the manager if the school is a private school. The school buildings shall not be lent for political or quasi-political purposes.

CHAPTER VIII.

FINANCIAL RELATIONS BETWEEN GOVERNMENT AND LOCAL BODIES.

A—Contributions by District Local Boards and Non-Authorised Municipalities.

141. *Payment of contribution by District Local Boards.*—The annual contribution payable by a district Local Board to the District School Board for the purposes of primary education under section 41(*1*) of the Act shall be paid by the Local Board to the School Board as soon as possible but not later than 15 days after the receipt of the income from the revenue described in clauses (*b*) and (*c*) of section 75 of the Bombay Local Boards Act, 1923.

142. *Payment of contributions by non-authorised municipalities.*—(1) The annual contribution payable by a Non-Authorised Municipality to a District School Board or Authorised Municipality, as the case may be, for the purposes of primary education under section 41(*2*) of the Act shall be paid by it in four quarterly instalments before the 10th April, the 10th July, the 10th October and the 10th January of the financial year.

(2) In addition to the contribution payable under sub-rule (1), a Non-Authorised Municipality shall pay over to the District School Board or Authorised Municipality, as the case may be :—

(*a*) the income accruing from any funds (including trust funds) held by such municipality for the purposes of primary education, and

(*b*) all moneys (including donations for the construction of or extensions to primary school buildings) received by it for purposes of primary education,

as soon as may be convenient, but not later than 15 days after the receipt of such income or moneys.

143. *Charging of interest.*—(1) A District School Board or Authorised Municipality which controls approved schools in the area of a Non-Authorised Municipality may, after giving two months' notice to the defaulting municipality, charge interest at a rate not exceeding 7½ per cent. on any amount not paid when due by such non-authorised municipality : Provided that no such notice of the board's or municipality's intention to charge such interest is sent to the non-authorised municipality unless at least two instalments fall in arrears.

(2) The amounts or interest charge under sub-rule (1) shall be added to the amount payable by the non-authorised municipality.

(3) The Non-Authorised Municipality may appeal against the resolution of the District School Board or an Authorised Municipality to charge such interest to the Director whose decision in the matter shall be final.

B—Grants by Government.

144. *Government grant to District School Boards.*—Government grant (hereinafter referred to as grant) will be based only on such expenditure incurred by a District School Board on primary education as is included in the budget or re-appropriation thereof sanctioned under rules 153 (6) or 155 (2) of these rules or as is specially authorised by Government. Such expenditure shall ordinarily consist of the items enumerated in sub-rule (2) of rule 145 the provisions of which shall apply *mutatis mutandis* in the case of the expenditure incurred by a District School Board.

145. *Government grant to Authorised Municipalities.*—(1) No grant shall be paid on any expenditure incurred by an Authorised Municipality in connection with primary education unless such expenditure has been sanctioned and held admissible for the purposes of grant by Government.

(2) Subject to the provisions of sub-rule (1), the recurring annual expenditure of an authorised municipality on which the grant is calculated shall ordinarily include :—

(*a*) The cost of the sanctioned staff maintained by the authorised municipality under section 20 of the Act including the cost of its leave, pension or provident fund contributions ;

(*b*) the pay and allowances, provident fund, gratuity and pension of the administrative Officer appointed by the Authorised Municipality under section 22 of the Act ;

(*c*) the rent of buildings used for schools or office purposes, rates, taxes, special repairs not enhancing the original cost of building and costing not more than Rs. 100 or such greater amount as Government may by special order for such period and for such reasons as may be specified in the order fix, and current repairs. Such special repairs, and current and ordinary repairs shall be carried out in accordance with the rules in Part I of Schedule H or in accordance with the regulations made by such municipality with the sanction of Government under section 17 (*3*) (*ii*) of the Act ;

(*d*) forms, stationery, furniture, equipment and books, including books for prizes, and books and slates for indigent pupils : Provided that the total expenditure on this account in any school does not exceed Rs. 5 per pupil in the first year of a school's existence and Re. 1 per pupil in any subsequent year. Expenditure in excess of these limits shall be classed as non-recurring expenditure ;

(*e*) monthly grants made to schools for petty expenses (contingent allowances) ;

(*f*) scholarships in primary schools and stipends in training institutions ;

(*g*) travelling allowances ;

(*h*) forms, stationery, stamps, printing and other office expenses ;

(*i*) grants to approved private schools ;

(*j*) such other reasonable expenditure as may be sanctioned and admitted by Government for purposes of grant :

Provided that—

(*i*) no expenditure incurred by an authorised municipality in connection with education other than primary education or from a trust fund, the income from which meets the whole cost of the object for which the trust was instituted ; e.g., the award of prizes in a particular school or for a particular object, shall be included in the said annual recurring expenditure ;

(*ii*) overpayments objected to in audit shall not be treated as approved expenditure, the consequent recoveries called for in audit if and when made being brought to account not by deduction from expenditure but as receipts under " cash recoveries of overpayments " in previous years.

(*iii*) no expenditure incurred in connection with a primary school maintained by an Authorised Municipality shall be included in the said annual recurring expenditure :—

(*a*) if the average attendance of the school, except in the year in which it was opened, is less than :—

(*i*) 15 in the case of an ordinary primary school and,

(*ii*) 10 in the case of schools for girls and backward communities, or

(*b*) if admission is refused to any pupil on the ground of his caste or community.

Explanation.—If no pupils belonging the scheduled castes are actually attending a school, it shall be deemed that admission is being refused to such pupils within the meaning of this sub-clause unless the School Board shows to the satisfaction of the Director that no pupils are residing within a distance of one mile from the school or adduce other satisfactory reasons for the absence of such pupils from the school.

146. *Grant how calculated.*—(1) The grant on account of expenditure on primary education incurred by a District School Board shall be calculated in accordance with the provisions of sub-section (*3*) of section 42 of the Act.

(2) In the case of an Authorised Municipality—

(*a*) the grant on account of the expenditure incurred by such municipality in bringing into operation a sanctioned scheme of compulsion shall be one-half of the additional recurring cost involved therein as it was estimated by such municipality, and

(*b*) the grant on account of the expenditure incurred by such Municipality on primary education other than the expenditure referred to in clause (*a*) shall not exceed such proportion of the sanctioned expenditure as may, from time to time, be laid down by Government :

Provided that the award of the grant on account of the expenditure referred to in clause (*b*) shall depend upon the financial condition of Government :

Provided further that *Government* may, in special circumstances, pay special grant to such municipality in addition to the grant referred to in clauses (*a*) and (*b*).

(*b*) *Non-recurring grants.*

147. *Grants on non-recurring expenditure in District School Board area.*—(1) Non-recurring expenditure on primary education in a District School Board area (including area of a Non-Authorised Municipality approved schools in which area are controlled by the District School Board) shall be classified as :—

(*a*) expenditure incurred on the acquisition and purchase of sites for primary schools, on the purchase or construction of new primary school buildings, or on the extensions of existing primary school buildings, and

(*b*) Expenditure incurred on items other than those specified in clause (*a*), viz., special repairs costing more than Rs. 100 or such greater amount as Government may from time to time by special order fix, or on repairs involving inmprovements and thus enhancing the original cost of primary school buildings or on the purchase of forms, stationery, furniture or equipment in excess of the limits laid down in rule 145 (2) (*d*).

(2) For expenditure incurred or to be incurred on items specified in clause (*a*) of sub-rule (1), Government may give to the District Building Committee of the District such grants in any year as its financial position in that year permits.

(3) Grant shall be paid on account of only such items of expenditure specified in clause (*b*) of sub-rule (*1*) as are included in the budget or re-appropriation thereof sanctioned under rules 153 (6) and 155 (2). Such grant shall be Calculated in accordance with the provisions of sub-section (*3*) of section 42 of the Act.

148. *Grants to authorised municipalities for expenditure included in a sanctioned scheme of compulsion.*—(1) Non-recurring grant shall be given by Government to an authorised municipality on account of expenditure incurred on erecting, purchasing, enlarging or rebuilding primary school building and on special repairs costing more than Rs. 100 or such greater amounts as Government may by special order from time to time fix, or on repairs involving improvements and thus enhancing the original cost of the building or on the purchase of sites and on forms, furniture, equipment and books in excess of the limits laid down in rule 145 (2) (*d*) : Provided that the expenditure has been sanctioned by Government as part of a scheme of compulsion and further that the expenditure does not exceed that cost as it was estimated by the authorised municipality.

(2) The amount of such grant shall be equal to one-half of the expenditure as it was estimated by the authorised municipality.

149. *Grants for other non-recurring expenditure.*—Non-recurring grants may also be given by Government to an Authorised Municipality on account of buildings or sites which do not form part of a scheme of compulsion. The award of such grants shall depend upon the financial position of Government.

150. *Conditions subject to which grants will be awarded.*—The award of non-recurring grants under rules 147, 148 and 149 shall be subject to such conditions regarding the sanitary and hygienic requirements to be observed in the designing and construction of buildings, the approval of detailed plans and estimates, the execution of trust deeds or agreements and other conditions as may be laid down by Government from time to time.

Note 1.—These conditions are provided as rules for building grants in Schedule 1.

Note 2.—Rules indicating the procedure for execution of works pertaining to school buildings are given in Part II of Schedule H.

(*c*) *Miscellaneous.*

151. *Grant to be based on estimated expenditure of the year—Adjustments in the following year.*—The grant paid to a District School Board or Authorised Municipality on account of primary education in any year shall be based on its estimated expenditue in that year and the necessary adjustments shall be made in the following year. Such estimated expenditure shall include any increase in the recurring expenditure on account of the normal growth of such expenditure as well as any new expenditure sanctioned by Government.

152. *Grants when payable.*—(1) The estimated grant shall be paid to District School Board or Authorised Municipality in three instalments in the following manner, namely :—

(*i*) One-half of such estimated grant not later than the 5th April in each year ;

(*ii*) One-fourth of such estimated grant not later than the 1st October in each year ; and

(*iii*) The balance, after the adjustments for the previous years have been made, under rule 151, not later than the 15th January in the following calendar year.

2 (2) The Director shall send a copy of the orders sanctioning the payment of grants to District School Boards or authorised municipalities to each of the following, namely :—

(*a*) Government in the Finance and Education and Industries Departments ;
(*b*) The Accountant General, Bombay ;
(*c*) The Examiner, Local Fund Accounts, Bombay ;
(*d*) The President of the Authorised Municipality concerned ;
(*e*) The Chairman of the School Board ;
(*f*) The Treasury Officer of the District ;
(*g*) The Educational Inspector of the Division.

C—Budget.

153. *Framing and sanctioning of a District School Board Budget.*—(1) The Administrative Officer shall prepare the budget for the District School Board for the ensuing financial year in the forms prescribed in Appendix D to these rules and shall submit such budget for the consideration of the District School Board before the 1st August of every year.

Note.—Detailed instructions for the preparation of the District School Board Budget are given in Schedule J.

(2) The District School Board may appoint a Committee to be designated as the Finance Committee for such period and consisting of such members as it deems fit. Such Committee, if appointed, shall advise the District School Board on all questions involving financial implications.

(3) It shall be the duty of the Financial Committee, if any, to scrutinise the budget prepared by the Administrative Officer under sub-rule (1) and forward its remarks thereon to the District School Board not later than the 10th August.

(4) The District School Board shall meet not later than the 24th August to consider the budget prepared by the Administrative Officer under sub-rule (1) and the remarks of the Finance Committee, if any, under sub-rule (3). At such meeting, the Board may by a resolution—

(*a*) pass the budget as a whole ; or

(*b*) modify the budget by enhancing, omitting or reducing any particular item or items which it may deem fit to enhance, omit or reduce ;

Provided that the board shall have no power to enhance, omit or reduce the provisions included in the budget on account of the pay (including duty pay for permanent teachers under training and pay for substitute teachers employed in the place of teachers deputed for training) and allowances of the staff maintained by the District School Board under section 20 of the Act.

(5) The Chairman of the District School Board shall, not later than the 31st August, submit to the Director in triplicate the budget as passed or modified by the board under sub-rule (4) .

(6) Government or an officer or authority empowered by Government in this behalf shall, before the 15th March of the following year, after such considerations as may be necessary, sanction the budget submitted under sub-rule (5) with such modifications as may be deemed fit.

154. *Framing and sanctioning of a Municipal School Board Budget.*—(1) The Municipal School Board, with the help of the Administrative Officer, shall prepare in the forms prescribed under rule 161 a preliminary budget for each year and submit it to the Authorised Municipality for sanction not later than the 1st September of the previous year.

Note.—While preparing the budget the Municipal School Board shall ensure that necessary provision for the pay and allowances of the primary school teachers and their substitutes at the rates fixed by Government from time to time is made in the budget.

(2) The authorised municipality may make such modifications in the budget prepared by the Municipal School Board under sub-rule (1) as it considers necessary and shall sanction it by the 1st January :

Provided that the provisions included in the budget on account of pay (including duty pay for permanent teachers under training and pay for substitute teachers appointed in the places of teachers deputed for training) and allowances of primary teachers shall not be subject to the vote of the authorised municipality.

(3) The preliminary budget so sanctioned shall have force until the revised budget is sanctioned by the Authorised Municipality under sub-rule (4).

(4) As soon as the Government grant for the year has been made known to the Authorised Municipality, the Municipal School Board shall make such modifications in the preliminary budget as may be required and submit a revised budget to the Authorised Municipality for sanction within one month of the receipt by the Municipal School Board of the sanction of the Government grant for the year. Subject to the provisions of the proviso to sub-rule (2), the Authorised Municipality may make such modifications in the revised budget as it considers necessary and shall sanction it within two months from the date of its submission by the School Board.

155. *Revised or supplementary Budget may be made when necessary.*—(1) A School Board may, at any time during the year for which any annual budget has been sanctioned, cause a revised or supplementary budget to be prepared. Every such revised or supplementary budget shall be considered and sanctioned by Government or Authorised Municipality, as the case may be, in the same manner as if it were an annual budget.

(2) Reappropriation of funds in a budget may be made from time to time subject to the same sanction as is required for the annual budget.

156. *When a sum not provided for in the budget to be expended.*—(1) No sum shall be expended in any year by or on behalf of a District School Board which is not included in the budget sanctioned for the board for that year unless the previous sanction of Government is obtained for such expenditure : Provided that in the case of a pressing emergency a District School Board may incur expenditure not exceeding Rs. 500 in a year from the discretionary grant provided for in the budget.

(2) Save in case of a pressing emergency, no sum shall be expended in any year by or on behalf of a municipal School Board unless such sum is included in the budget sanctioned for the board in that year.

(3) If any sum is expended under sub-rule (2) on a pressing emergency, the circumstances shall forthwith be communicated in writing to the Director by the President of the Authorised Municipality with an explanation of the way in which it is proposed by the Authorised Municipality to cover such extra expenditure.

D—Maintenance, administration and use of the Primary Education Fund.

157. *Credit to the Primary Education Fund.*—(1) The receipt of all grants payable by Government and of all contributions payable by the District Local Board or Non-Authorised Municipalities to the District School Board on account of primary education shall be acknowledged by acquittance signed by the Administrative Officer and countersigned by the Chairman of the District School Board or, in his absence, by the Vice-Chairman or other member of the District School Board to whom this power has been delegated by the Chairman. The amounts received shall be credited forthwith to the Board's Primary Education Fund.

(2) All grants payable by Government and all contributions to be made by the Non-Authorised Municipalities to an Authorised Municipality on account of primary education shall be paid to the Authorised Municipality and receipt thereof shall be acknowledged by acquittance signed by the President of the Authorised Municipality or by a Councillor or Officer of the Authorised Municipality authorised by it in this behalf. Such grants or contributions shall, within one week of their receipt from Government or Non-Authorised Municipalities, as the case may be, be paid by the Authorised Municipality to the credit of the Primary Education Fund and the receipt of such grants or contributions as well as of the grant payable by the Authorised Municipality on account of primary education under section 44 (*2*) (*e*) of the Act, shall be acknowledged by acquittance signed by the Administrative Officer and countersigned by the Chairman of the Municipal School Board or, in his absence, by the Vice-Chairman or other member of the Municipal school Board to whom this power has been delegated by the Chairman.

(3) The receipt of all other moneys received by a District School Board or Authorised Municipality on account of primary education and payable to the credit of the Primary Education Fund shall be acknowledged by acquittance signed by the Administrative Officer or, during his absence from head quarters by the accountant or clerk authorised by him in this behalf. All such other moneys shall be remitted to the bank or treasury at fixed intervals or when the collection exceeds such amount as may be fixed by the School Board.

158. *Debits to the Primary Education Fund.*—No expenditure shall be debited to the Primary Education Fund unless it is incurred for the objects specified in rule 160 or is debitable according to the orders of Government for the time being in force to the Primary Education Fund and unless such expenditure is provided for—

(*a*) in the budget of the School Board sanctioned by Government or Authorised Municipality as the case may be, or

(*b*) by re-appropriation in the prescribed manner.

159. *Fund how drawn against.*—(1) No payment shall be made from a bank or from the Government treasury out of the Primary Education Fund, except upon a cheque siged by the Administrative Officer and countersigned by the Chairman of the School Board or in his absence by the Vice-Chairman or other member of the School Board to whom the power of countersigning cheques has been delegated by the Chairman. In the absence of the Administrative Officer such cheques shall be signed by the Vice-Chairman and count ersigned by the Chairman or in the absence of Chairman by any member of the School Board other than the Vice-Chairman to whom the power of countersigning cheques has been delegated by the Chairman. Due intimation of the delegation of such power shall be given by the Chairman to the bank or Government treasury in which the Primary Education Fund is kept.

(2) If the Director is satisfied that for any reason whatever a cheque cannot be countersigned by any of the persons mentioned in sub-rule (1) or that any such person has without reasonable excuse failed to countersign any such cheque and that it is necessary for the proper discharge of the functions of the School Board that the cheque should be countersigned by some other person, the cheques shall be countersigned by such person as the Director may direct.

160. *Use of the Primary Education Fund.*—Subject to the provisions of the Act and the Rules thereunder, the Primary Education Fund shall be applied for—

(*a*) the payment of salaries and allowances of the staff maintained by a District School Board or Authorised Municipality under section 20 of the Act ;

(*b*) the payment of salaries and allowances of the Administrative Officer appointed by an Authorised Municipality under section 22 ;

(*c*) the payment, if any, at the prescribed rates, of pension, gratuity and/or the Provident Fund in respect of the classes of employees mentioned in clauses (*a*) and (*b*) above ;

(*d*) the payment of grants-in-aid to approved private schools ;

(*e*) the discharge of the liabilities incurred by the District School Board or Authorised Municipality on the renting, equipment and maintenance of primary schools and on construction of primary school buildings in the case of an Authorised Municipality ;

(*f*) the payment of the prescribed travelling and other allowances to members of the School Board ;

(*g*) meeting the expenditure incurred on the provision of books, slates, stationery and other financial help for indigent school-going children ;

(*h*) meeting the expenditure incurred in connection with medical inspection and follow-up treatment and provision of milk or meals for school-going children ;

(*i*) the payment of any other sum which the District School Board or Authorised Municipality is legally liable to pay or which has been spent on the authority of Government.

E—Miscellaneous.

161. *Forms of Receipts and Expenditure.*—The accounts of receipts and expenditure of a School Board shall be kept in such manner, in accordance with such instructions and in such forms as may be specified by Government.

162. *Abstract of account to be sent to Director.*—Abstract of receipts and expenditure during each official year shall be forwarded by the Administrative Officer to the Director as soon as may be convenient after the end of the year in such form as may be specified by Government.

163. *Administrative Officer to make disbursements.*—All disbursements shall be made by the Administrative Officer or by the Assistant Administrative Officer or Accountant or Clerk to whom this duty has been delegated by the Administrative Officer.

164. *Responsibility for proper checking.*—The Accountant or Clerk of the School Board to whom such duty is assigned by the Administrative Officer shall subject to the general responsibility of the Administrative Officer be primarily responsible for the scrutiny of all vouchers or bills before a cheque or letter of credit is prepared. It shall be the duty of the

Administrative Officer to bring to the notice of the Chairman, Vice-Chairman or other member of the School Board who conutersigns cheques or letters of credit any unusual feature in payment on account of which such cheque or letter is drawn.

165. *Audit of Accounts.*—The accounts and receipts and expenditure of the Primary Education Fund shall be examined and audited annually before the close of August by the Auditors of the Local Audit Departments in accordance with the provisions of the Bombay Local Fund Audit Act, 1930 (Bom. XXV of 1930), and the rules made thereunder.

166. *Administrative Officer to assist the Auditor.*—The Administrative Officer shall assist the Auditor in disposing of all objections raised by him, and shall place before the school board at its next meeting all audit objections which have not been disposed of in consultation with the Auditor.

CHAPTER IX.

Powers and Duties of Officers appointed by Government under Section 48 (1) of the Act.

167. *Powers and duties of the Deputy Educational Inspector.*—Subject to the provisions of the Act and the rules thereunder the Deputy Educational Inspector shall—

(*a*) be responsible for arranging for the inspection of all approved schools in the district ;

(*b*) frequently visit areas backward in education and make his suggestions from time to time to the school board concerned for the educational advancement of such areas ;

(*c*) submit to the School Board concerned his recommendations regarding the recognition or withdrawal of recognition of a private primary school;

(*d*) recommend grants-in-aid to be paid by the School Boards concerned to approved private schools in the district ;

(*e*) forward to the Administrative Officer concerned the inspection reports submitted by the Assistant Deputy Educational Inspectors under him on approved schools other than Government schools in the district together with the confidential reports on individual teachers serving in schools conducted by the Schools Board and inspected by the Assistant Deputy Educational Inspectors and make such remarks or suggestions as he considers necessary for the proper administration, management and control of such schools or for the improvement in the efficiency or standard of work of such teachers ;

(*f*) hold conferences of primary school teachers in different areas of the district for improving the quality of work in primary schools or explaining to them the new idealogy or methodology in primary education ;

(*g*) be responsible for collecting the annual statistical and other information about approved private schools ;

(*h*) write annual reports on the progress of primary education in the district ; and

(*i*) do such other work connected with primary education as may from time to time be assigned to him by the Director or the Educational Inspector of the Division.

168. *Powers and duties of the Assistant Deputy Educational Inspector.*—Subject to the provisions of the Act and the rules thereunder, the Assistant Deputy Educational Inspector shall—

(*a*) inspect every year all approved private schools and such public schools in his beat as may be assigned to him in a year and submit his inspection reports on their work, attendance and administration to the Deputy Educational Inspector together with his confidential reports on the teachers in the public schools and discuss with the Head Master and other teachers the main defects in the methods of teaching and other matters connected with the school;

(*b*) inspect the accounts of all approved private schools in his beat assess the grant-in-aid admissible to such schools and send to the Deputy Educational Inspector along with the inspection report on such schools, a statement showing the details of the grant-in-aid assessed by him;

(*c*) pay surprise visits to every approved school in his beat at least once in every year in addition to the annual inspection;

(*d*) visit and inspect new private school seeking recognition or grant-in-aid for the first time and submit his inspection report on the schools together with his recommendations as regards the approval of and grant-in-aid to such schools to the Deputy Educational Inspector;

(*e*) while on tour, arrange for interviews with the municipal or village school committees, as the case may be, and discuss with them the requirements of the school and need for the expansion of primary education;

(*f*) do such other work connected with primary education as may be entrusted to him by the Deputy Educational Inspector.

169. *Powers and duties of the Assistant Deputy Educational Inspectors for Physical Education.*—Subject to the provisions of the Act and the rules thereunder, the Assistant Deputy Educational Inspector for Physical Education shall—

(*a*) be responsible for the supervision and organisation of physical education in primary schools in his beat;

(*b*) organise short-term training courses in physical education for primary school teachers in his beat;

(*c*) submit to the Administrative Officer concerned, through the Deputy Educational Inspector, his recommendations in regard to physical education equipment to be supplied to schools maintained by the District School Board or Authorised Municipality as the case may be;

(*d*) inspect the work in physical education in all approved schools in his beat;

(*e*) do such other work in connection with physical education as may be assigned to him by the Deputy Educational Inspector; and

(*f*) also exercise such powers and perform such duties enumerated in rule 168 as may be assigned to him by the Deputy Educational Inspector.

170. *Powers and duties of the Craft Supervisors.*—Subject to the provisions of the Act and the rules thereunder, the Craft Supervisor shall—

(*a*) be responsible for supervising the teaching of crafts in basic and other primary schools;

(*b*) be responsible for guiding the craft teachers in their work and for advising them in regard to the provision for equipment and teaching of crafts;

(*c*) be also responsible for organising short-term courses of craft training for primary school teachers ; and

(*d*) do such other work connected with craft teaching in primary schools as may be entrusted to him by the Deputy Educational Inspector.

CHAPTER X.

STATE BOARD OF PRIMARY EDUCATION.

171. *Election of members by School Boards.*-(1) The six members of the State Board of Primary Education (hereinafter refered to as the Board) shall be elected by the School Boards as follows :—

One by the District School Boards—Poona, Satara, Ahmednagar, East, Khandesh and West Khandesh.

One by the District School Boards—Thana, Kolaba, Ratnagiri, Nasik and Bombay Suburban District.

One by the District School Boards—Ahmedabad, Kaira, Surat, Broach and Panch Mahals.

One by the District School Boards—Dharwar, Belgaum, Bijapur, Kanara and Sholapur.

One by the Municipal School Boards—Malegaon, Nasik, Poona City, Jalgaon Amalner, Dhulia, Ahmedabad, Nadiad, Broach and Surat.

One by the Municipal School Boards—Bandra, Satara City, Sholapur, Ahmednagar, Dharwar, Hubli, Gadag and Bijapur.

(2) For the purposes of clause (*a*) of sub-section (*6*) of section 58 of the Act, a person shall be deemed to be graduate of a recognized University if he is a graduate of any of the Universities specified in Schedule K.

(3) The election of the six members of the Board shall be held in accordance with the procedure prescribed in Schedule L.

(4) The President of the Board shall be the Returning Officer and shall be responsible for the conduct of the election provided that in the case of the first election the Director shall be the Returning Officer.

172. *Election in the event of casual vacancy.*—(1) In the event of a casual vacancy of a member of the Board the President shall, as soon as may be, take steps to hold a fresh election in accordance with the provisions of rule 171 to fill up the vacancy.

(2) In the event of a casual vacancy of the President of the Board, the Board shall, at its next meeting or within one month from the date of the President's death or resignation or ceasing to be a member of the Board whichever is earlier, elect another person from among its own members to be the President.

173. *Government to decide finally on disputes.*—If any question, dispute or doubt arises as to the validity of any election, the orders of the State Government shall be final for the purposes of deciding such question, dispute or doubt.

174. *Names of the members to be published in the official Gazette.*—The names of the members of the Board elected or appointed, as the case may be, shall be published by Government in the *Offical Gazettee.*

175. *Powers and duties of the Board.*—In addition to the powers and duties mentioned in clauses (*a*) and (*b*) of section 59 of the Act, the Board shall have power :—

(*a*) to make from time to time regulations not inconsistent with the Act or the rules framed thereunder in respect of the length of notice to be given for calling meetings, the fixing of the place, day and hour of meetings, the number of members to constitute a quorum, the conduct, management and adjournment of meetings, the recording of proceedings and the transaction of its business generally e.g. by the circulation of propositions to members;

(*b*) to appoint committees consisting of such members of the Board and such other persons, if any, as the Board in each case may select to advise the Board: on any matter on which the Board considers such advice to be necessary.

CHAPTER XI.

MISCELLANEOUS.

A.—Constitution and functions of village school committees.

176. *Meaning of terms "village", "panchayat village" and "non-panchayat village".*—For the purposes of this Chapter—(1) A "village" means a revenue village which is not a municipality constituted under the Bombay District Municipal Act, 1901, or Bombay Municipal Boroughs Act, 1923.

(2) A "panchayat village" means a village in which a panchayat has been constituted under the Bombay Village Panchayats Act, 1933.

(3) A "non-panchayat village" means a village other than a panchayat village.

177. *Constitution of village school committees.*—(1) In a panchayat village the panchayat shall, as soon as possible, appoint a village school committee consisting of not less than three and not more than five members who may or may not be members of the panchayat but who shall be persons who ordinarily reside in the village and have passed at least the primary fourth standard examination.

(2) In a non-panchayat village which contains a District School Board School, the District School Board shall, as soon as possible after it is constituted, appoint a village school committee consisting of not less than three and not more than five members who shall be persons who ordinarily reside in the village and have passed at least the primary fourth standard examination.

178. *Term of office of the village school committee.*—The term of office of the Village School Committee in a panchayat village shall be co-extensive with the term of the office of the village panchayat. The term of office of the Village School Committee in a non-panchayat village shall be co-extensive with the term of the District School Board :

Provided that the members of the Village School Committee shall continue in office until a new committee is appointed by the panchayat or District School Board, as the case may be, and on the appointment of the new committee, the said members shall be deemed to have vacated office.

179. *Casual vacancies in village school committee.*—(1) In the event of any vacancy occurring (*i*) on account of the death, resignation or removal of a member of the Village School Committee, or (*ii*) through the member of such committee becoming incapable of acting previous to the expiry of his term of office, the vacancy shall forthwith be reported by the Chairman of the Committee—

(*a*) in the case of a panchayat village to the Sarpanch of the panchayat, and

(*b*) in the case of a non-panchayat village, to the Chairman of the District School Board.

(2) The sarpanch or chairman, as the case may be, shall as soon as conveniently may be, take steps to fill up the vacancy arising under sub-rule (1).

(3) The person appointed under sub-rule (2) shall hold office so long only as the member in whose place he is appointed would have held it if the vacancy had not occurred.

180. *Removal of the member of the Village School Committee.*—The panchayat, in the case of a panchayat village, or the District School Board in the case of a non-panchayat village, may, on the recommendation made by a majority of the members present at the meeting of the Village School Committee or Administrative Officer, remove, if it thinks fit, any member appointed on such committee, if such member has been guilty of misconduct in the discharge of his duties, or has become incapable or unfit for the purpose of performing his duties as a member

Provided that before removing such member, the panchayat or the District School Board, as the case may be, shall give him a reasonable opportunity of showing cause why he should not be removed. The decision of the panchayat or the District School Board, as the case may be, shall be final.

181. *Election of the Chairman and Vice-Chairman.*—The Village School Committee shall elect a chairman from among its own members. The Committee shall also elect a vice-chairman who shall carry on the duties of the chairman in his absence.

182. *Duties of the Village School Committee.*—The Village School Committee shall—

(*a*) assist the School Board or the District Building Committee, as the case may be, in securing suitable accommodation for the school;

(*b*) assist the Head Teacher or the District School Board, as the case may be, in carrying out the current repairs to the school building if the District School Board is liable for such repairs;

(*c*) visit all schools placed under its supervision at least once a month;

(*d*) note whether the number of pupils in the school at the time of the visit corresponds with the number marked as present in the register and report any irregularity to the Administrative Officer;

(*e*) report to the Administrative Officer any irregularity or unpunctuality in the matter of the opening and closing of the school and the teachers' attendance;

(*f*) see that the school premises are in good repair and kept in a sanitary condition.

183. *Village School Committee to endeavour to increase number of pupils.*—The Village School Committee shall endeavour to increase the number of pupils, especially of those belonging to the Intermediate communities, Scheduled castes, Aboriginal and Hill Tribes and other Backward communities and to improve the attendance.

184. *Village School Committee to assist in introducing compulsory education.*—If it is proposed to introduce compulsion in any area, the Village School Committee in that area shall assist in explaining the measures to parents and shall, if called upon to do so by the District School Board, assist in the preparation of a census of children of school going age.

185. *Village School Committee to enforce compulsion.*—When compulsion has been introduced in an area, the Village School Committee shall assist in enforcing it.

186. *Village School Committee to assist the Head Teacher.*—The Village School Committee shall assist the head teacher in determining which children shall be provided with books, slates and other school materials, on account of the poverty of their parents.

187. *Report to Chairman of Head Teacher's leave.*—Before proceeding on casual or other leave, the head teacher shall inform the Chairman of the Village School Committee in writing of his intention.

188. *Chairman's authority to grant leave to Head Teacher.*—In the event of the Head Teacher's sudden illness, or for other very urgent reason, such as the death of near relative of the Head Teacher, the Chairman of the Village School Committee may allow him to leave his charge. The Chairman shall at once report such action to the Administrative Officer.

189. *Absence without leave to be reported.*—The Chairman of the Village School Committee shall at once report to the Administrative Officer the absence without leave of the head teacher or of an assistant teacher.

190. *Chairman to take charge of the School in certain cases.*—In the event of the death of the Head Teacher, or his absence on leave or otherwise if there is no Assistant teacher the Chairman of the Village School Committee shall take charge of the school and report the matter at once to the Administrative Officer.

191. *Village School Committee to be present on certain occasions.*—The Chairman and members of the Village School Committee may be present at the school at the time of the visit of any officer of the Educational or Revenue Department or of any member or officer of the District School Board.

192. *Charge of a school to be handed over in presence of the Village School Committee in certain cases.*—On the transfer of a Head Teacher, if there is any difference of opinion between the Head Teacher giving over charge and the Head Teacher taking over charge in regard to the school accounts, records, furniture or other equipment, the charge shall be handed over in the presence of two or more members of the Village School Committee including the Chairman, if he can attend. The members present shall make such remarks as they think fit on the charge report.

B.—Provident Funds, Gratuities and Pensions.

193. *Establishment of a Provident Fund.*—(1) Every District School Board, for all its employees, and every Authorised Municipality, for its primary school teachers shall establish a provident fund.

Note.--A provident fund established by a District Local Board or Municipality as a Local Authority before the date on which these rules come into force shall be deemed to be provident fund established under these rules by the District School Board or Authorised Municipality, as the case may be.

(2) Subscription to the Provident Fund established under sub-rule (1) shall be compulsory for such members of the staff of a District School Board or for such primary school teachers of an Authorised Municipality as—

(*a*) are already subscribing to the provident fund established by a District School Board or Municipality as a Local Authority before the coming into operation of these rules, or

(*b*) enter into the permanent service of the District School Board or Authorised Municipality (including probationers appointed to permanent vacancies) on or after the date on which these rules come into force.

(3) Every District School Board or Authorised Municipality which on the date on which these rules come into force had established only pension fund for its employees or teachers, shall, within two months from the date of establishment of provident fund under sub-rule (1), require by notice in writing its employees or teachers to exercise the option to join the Provident Fund in lieu of pensions and such employees or teachers shall exercise such option within six months from the date of notice. The option so exercised shall have effect from the 1st day of the month following that in which it is exercised and shall be final.

(4) The Provident Fund established under sub-rule (1) shall form part of the Primary Education Fund of the District School Board or Authorised Municipality concerned and shall be administered, maintained and used in accordance with the rules prescribed in schedule M to these rules.

194. *Establishment of a Pension Fund.*—(1) A pension fund shall be established by a District School Board for such members of its staff and by an Authorised Municipality for such of its primary school teachers as are under the rules eligible to receive pension.

Note.—A pension fund established by a District Local Board or Municipality as a Local Authority befote the date on which these rules come into force shall be deemed to be a pension fund established under these rules by the District School Board or Authorised Municipality, as the case may be.

(2) The pension fund established under sub-rule (1) shall form part of the Primary Education Fund of the District School Board or Authorised Municipality concerned and shall be administered, maintained and used in accordance with the rules prescribed in Schedule N to the rules.

195. *Payment of pension and leave contribution on account of lent staff.*—(1) Every District School Board or Authorised Municipality shall pay pension and leave contribution to Government on behalf of all officers, clerks or other persons holding

permanent appointment under Government whose services have been or may be lent to such District School Board or Authorised Municipality on foreign service conditions. Such officers, clerks or other persons shall receive their pensions or gratuities from the General Revenues.

(2) Every District School Board or Authorised Municipality shall pay pension and leave contributions to another District School Board or Authorised Municipality on behalf of the permanent employees of such other District School Board or Authorised Municipality who have elected to remain on a pensionary basis and whose services have been lent to the first mentioned District School Board or Authorised Municipality on foreign service conditions. Such employees shall receive their pensions or gratuities from the Primary Education Fund of the second mentioned District School Board or Authorised Municipality.

196. *Determination of pension and gratuities.*—(1) The grant of pensions and gratuities to the members of the staff maintained by a District School Board and to primary school teachers maintained by an Authorised Municipality shall be determined in accordance with the rules prescribed from time to time by Government for similar classes of its employees.

(2) In particular and without prejudice to the generality of the provisions of sub-rule (1), the grant of pensions and gratuities to the members of the staff of a District School Board and to primary school teachers of an Authorised Municipality shall be determined as follows :—

(*a*) Every guaranteed teacher shall be eligible for pension or gratuity according to the rules in force in Government Education Department on the date of his retirement unless he has exercised the option, within the prescribed period, of remaining under the old rules to which he was previously subject :

Provided that such of the guaranteed teachers as have under sub-rule (3) or (4) of rule 5 ot the Bombay Primary Education Rules, 1924, or under sub-rule (3) of rule 193 of these rules exercised the option of joining the provident fund in liue of pension shall, from and after the date of their admission to the Provident Fund, be entitled to the benefit of such pension and provident fund as provided in clause (*c*) :

Provided further that such of the said teachers as have not elected to join the provident fund established by the District School Board or Authorised Municipality shall be entitled to receive such pension (e.g., retiring, superannuation, etc), as is admissible under the rules and as may be certified by the Accountant General. The amount of such pension payable by Government and the District School Board or Authorised Municipality concerned shall be determined in accordance with the method indicated in articles 45 and 799 of the Civil Service Regulations and rule 279-B of the Bombay Civil Services Rules, as the case may be. The amount of such pension payable by the District School Board or Authorised Municipality shall be drawn by them from the Primary Education Fund of the District School Board or Authorised Municipality concerned, the amount payable by Government being drawn from the Consolidated Fund of the State.

(*b*) Non-guaranteed teachers in the employ of a District School Board or Authorised Municipality and members of the non-teaching staff in the employ of a District School Board for whom only pension fund was established by such

District School Board or Authorised Municipality and who, under sub-rule (3) of rule 193, have exercised the option to remain on a pensionary basis, shall on retirement be entitled to receive such pension (*e.g.*, retiring, superannuation, etc.) as is admissible under the rules and as may be certified by the Accountant General. The District School Board or Authorised Municipality concerned may make such reduction in the admissible pension as it thinks fit, if the record of the employee in its opinion, is not quite satisfactory.

(*c*) The guaranteed teachers who have exercised the option of joining the provident fund in lieu of pension, and members of the District School Board staff other than guaranteed teachers and non-guaranteed teachers of an authorised municipality who were employed on a pensionary basis but who subsequently have exercised the option of joining the provident fund in lieu of pension shall be entitled—

(*i*) to such pension or gratuity payable on retirement from the service of the District School Board or Authorised Municipality as they would have been entitled to if they had been invalidated from the date on which they have been admitted to the provident fund, the amount of such pension or gratuity, being based on the emolument drawn immediately prior to the date of their joining the provident fund. The amount of such pension payable by Government and/or the District School Board or Authorised Municipality shall be determined in accordance with the method indicated in Articles 45 and 799 of the Civil Service Regulations or rule 279-B of the Bombay Civil Services Rules as the case may be. The amount of such pension payable by the District School Board or Authorised Municipality shall be drawn by them from the Primary Education Fund of the District School Board or Authorised Municipality concerned, the amount payable by Government being drawn from the Consolidated Fund of the State;

(*ii*) to such further sum from the District School Board or Authorised Municipality to be payable on retirement from its service as may stand to their credit in the books of the Provident Fund, subject however, to the conditions laid down in Schedule M to these rules.

Note.—The staff referred to in clause (*c*) above shall retire or be permitted or required to retire from the service of the District School Board or Authorised Municipality in accordance with the pension rules in the Bombay Civil Services Rules Manual and, for this purpose, their services after joining the provident fund shall be taken into account. Those who are required to retire on the ground of inefficiency and whose total period of service including service rendered after joining the provident fund is less than that specified in rule 254 (2) of the Bombay Civil Services Rules may be granted pension in accordance with rule 301 of the Bombay Civil Services Rules. In the case of guaranteed teachers who have elected to remain under the old pension rules, the grant of such pension shall be made subject to the provisions of Article 353 of the Civil Service Regulations.

C.—Delegation of powers, duties and functions.

197. *Delegation by Authorised Municipality.*—Subject to the provisions of the Act and these rules an Authorised Municipality may delegate any of its powers, duties and functions to the Municipality School Board:

Provided that without the previous sanction of the Authorised Municipality the Municipal School Board shall not take any action which may involve any expenditure in excess of that provided for in the budget or increase the liability of the Authorised Municipality for future years.

198. *Delegation by School Board.*—The School Board may delegate any of its powers, duties and functions in accordance with the provisions of clause (*b*) of sub-section (*2*) of section 61 of the Act :

Provided that no action which may involve expenditure in excess of that provided for in the budget or increase the liability of the District School Board or Authorised Municipality as the case may be, in future years shall be taken by any Committee, member or officer of the Board to whom such powers are delegated without the previous sanction of the District School Board or of the Municipal School Board and Authorised Municipality.

D.—Schemes of Expansion on a Voluntary Basis.

199. *Rough estimate of proposals of additional expenditure.*—(1) When a District School Board or Authorised Municipality proposes to incur additional expenditure on the expansion of primary education on a voluntary basis, it shall submit for the administrative approval of Government a rough estimate of the several items of expenditure through the Director so as to reach the Director at least one year before the beginning of the financial year in which it is proposed actually to incur the additional expenditure.

(2) The rough estimate under sub-rule (1) shall be prepared in the relevant form prescribed in Appendix "E" to these rules.

200. *When detailed proposals to be submitted.*—(1) As soon as the rough estimate of the proposals is administratively approved by Government and the fact of such approval is communicated to the District School Board or Authorised Municipality concerned, it shall within four months from the date of such communication, prepare and submit to the Director detailed proposals separately for each item of additional expenditure.

(2) The detailed proposals for (i) the opening of new schools, (*ii*) the employment of additional teachers, clerks, inferior servants and other staff and (*iii*) payment of rents of school buildings shall be submitted in the relevant forms prescribed in Appendix "E" to these rules.

201. *Powers to rescind, vary or add to rules.*—If the State Government is satisfied that the strict observance of the provisions of these rules in their application to any person or institution or a class of persons or institutions is not possible in any case for sufficient reasons, it may rescind or vary or add to the provisions of any one or more of these rules, provided such rescission, variation or addition is not inconsistent with the provisions of the Act.

SCHEDULE A.

(*See* Rule 3 of the Bombay Primary Education Rules, 1949.)

SHOWING THE CONSTITUTION OF THE SCHOOL BOARDS UNDER THE BOMBAY PRIMARY EDUCATION ACT, 1947.

Serial No.	Name of the District School Board or the Municipal School Board.	Number of seats reserved for				
		Women.	Minorities.		Backward communities.	Representatives of Non-authorised Municipalities.
			Muslims.	Other minorities.		
1	2	3	4	5	6	7
	District School Boards.					
1	Bombay Suburban District.	1	1	1 (Indian Christian)	1	1
2	Thana	1	..	....	3	1
3	Kolaba	1	1	....	2	2
4	Ratnagiri	1	1	....	2	2
5	Nasik	1	..	....	2	2
6	Poona	1	..	....	2	2
7	Satara	1	..	....	2	2
8	Sholapur	1	1	....	2	1
9	Ahmednagar ..	1	..	....	2	1
10	East Khandesh ..	1	1	....	2	2
11	West Khandesh ..	1	..	....	3	1
12	Ahmedabad ..	1	1	....	2	2
13	Kaira	1	1	....	2	2
14	Surat	1	1	....	2	1
15	Broach	1	1	....	2	1
16	Panch Mahals ..	1	1	....	2	1
17	Dharwar	1	1	....	2	1
18	Belgaum	1	1	....	2	1
19	Bijapur	1	1	....	2	1
20	Kanara	1	1	....	1	2
	Municipal School Boards.					
1	Bandra	1	1	1 (Indian Christian)	1	.....
2	Nasik	1	1	.....	1	.....
3	Malegaon	1	...	.....	1	.....
4	Poona City ...	1	1	.....	1	1
5	Satara	1	1	.....	1	.....
6	Sholapur	1	1	.....	1	.....
7	Ahmednagar ..	1	1	1 (Indian Christian)	1	.....
8	Jalgaon	1	1	.. ..	1	.....
9	Amalner	1	1	.....	1	.....
10	Dhulia	1	1	.....	1	.....
11	Ahmedabad ...	1	1	.....	1	.....
12	Nadiad	1	1	.....	1	.....
13	Surat	1	1	.....	1	.....
14	Broach	1	2	.....	1	.....
15	Dharwar	1	1	.....	1	.....
16	Hubli	1	1	.....	1	.....
17	Gadag-Betigeri ...	1	1	.....	1	.....
18	Bijapur	1	1	.....	1	.....
19	Belgaum	1	1	.....	1	.....

SCHEDULE A—*contd.*

Serial No.	Name of the District School Board or the Municipal School Board.	Number of seats reserved for		No. of persons appointed by Government.		Total number of members.
		Persons who have passed the Matriculation or Second Year Training Certificate Examination.	General seats.	Government Officials.	Others.	
1	2	8	9	10	11	12
	District School Boards.					
1	Bombay Suburban District.	3	2	1	1	12
2	Thana	3	4	1	2	15
3	Kolaba	3	2	1	2	14
4	Ratnagiri	3	4	1	2	16
5	Nasik	3	5	1	2	16
6	Poona	3	5	1	2	16
7	Satara	3	5	1	2	16
8	Sholapur	3	4	1	2	15
9	Ahmednagar ..	3	6	1	2	16
10	East Khandesh ..	3	4	1	2	16
11	West Khandesh ..	3	4	1	2	15
12	Ahmedabad ..	3	2	1	2	14
13	Kaira	3	3	1	2	15
14	Surat	3	3	1	2	14
15	Broach	3	3	1	1	13
16	Panch Mahals ..	3	3	1	2	14
17	Dharwar	3	5	1	2	16
18	Belgaum	3	5	1	2	16
19	Bijapur	3	4	1	2	15
20	Kanara	3	3	1	1	13
	Municipal School Boards.					
1	Bandra	3	3	1	1	12
2	Nasik	3	4	1	1	12
3	Malegaon	3	5	1	1	12
4	Poona City ...	3	4	1	1	13
5	Satara	3	4	1	1	12
6	Sholapur	3	5	1	1	13
7	Ahmednagar ...	3	3	1	1	12
8	Jalgaon	3	4	1	1	12
9	Amalner	3	4	1	1	12
10	Dhulia	3	4	1	1	12
11	Ahmedabad ...	3	5	1	2	14
12	Nadiad	3	4	1	1	12
13	Surat	3	5	1	1	13
14	Broach	3	3	1	1	12
15	Dharwar	3	4	1	1	12
16	Hubli	3	4	1	1	12
17	Gadag-Betigeri ...	3	4	1	1	12
18	Bijapur	3	4	1	1	12
19	Belgaum	3	4	1	1	12

SCHEDULE B.

(*See* Rule 4 of the Bombay Primary Education Rules, 1949.)

A. The following classes and communites shall be treated as minorities :—

(1) The Muslims in all districts and authorised Municipalities of the State except in the Disticts of Thana, Nasik, Poona, Satara, Ahmednagar and West Khandesh and in the authorised Municipality of Malegaon.

(2) The Indian Christians in the Bombay Suburban District and in the authorised Municipalities of Bandra and Ahmednagar.

B. The following classes and communities shall be treated as backward communities :—

Backward Communities.

1. Advinchincher (section of No. 149).
2. Agar.
3. Alitkar.
4. Asodi.
5. Bahurupi.
6. Bajania.
7. Bakad or Bant.
8. Balsantoshi.
9. Bandi.
10. Barda.
11. Battal.
12. Bava.
13. Bavacha.
14. Bazigar.
15. Bedar (same as Nos. 17, 137, 138, 184 and 199).
16. Beldar.
17. Berad (same as Nos. 15, 137, 138, 184 and 199).
18. Bhambi.
19. Bhamta (same as Nos. 64, 183 and 191).
20. Bhand.
21. Bhangi.
22. Bharadi.
23. Bhavaiya.
24. Bhavin (males known as Devalis at No. 49).
25. Bhil.
26. Bhisti.
27. Bhoi.
28. Bhute.
29. Budbudki.
30. Burud.
31. Chakrawadya Dasar.
32. Chalvadi.
33. Chambhar (same as Nos. 1[illegible]2 and 165).
34. Chamtha.
35. Chandlagara.
36. Charan.
37. Charodi.
38. Chena Dasaru.
39. Chhara (same as Nos. 88, 89 and 168).
40. Chitrakathi.
41. Chodhra.
42. Chuhar (same as No. 43).
43. Chuhra (same as No. 42).
44. Dabgars (in Gujarat).
45. Dakaleru.
46. Dasa.
47. Davari.
48. Depala.
49. Devalis (females known as Bhavins at No. 24).
50. Devdig.
51. Dhanka.
52. Dhegu Megu.
53. Dhodia.
54. Dholi.
55. Dhor.
56. Dombari.
57. Dubla.
58. Futgudi.
59. Gamit (same as No. 60).
60. Gamta (same as No. 59).
61. Gandhrap.
62. Garode.
63. Garudi (same as No. 133).
64. Ghantichor (same as Nos. 19, 183 and 191).
65. Ghisadi.
66. Golla.
67. Gond.
68. Gondhali.
69. Gopal.

70. Halepaik
71. Halleer.
72. Halsar (same as Nos. 73 and 76)
73. Haskar (same as Nos. 72 and 76).
74. Helav.
75. Holaya.
76. Hulsavar (same as Nos. 72 and 73).
77. Jatia.
78. Jatigar.
79. Javeri (same as No. 82)
80. Jogi
81. Jogtin.
82. Johari (same as No. 79).
83. Joshi.
84. Kahar.
85. Kaikadi.
86. Kammi
87. Kanade Talwar
88. Kanjar Bhat (same as Nos. 39, 89 and 168).
89. Kanjari (same as Nos. 39, 88 and 168).
90. Kapdi.
91. Katabu (same as No. 97).
92. Kathodi (same as No. 93).
93. Katkari (same as No. 92).
94. Kattai.
95. Kharwa.
96. Khelkari (same as No. 100).
97. Kiliket (same as No. 91).
98. Kolcha (same as No. 99).
99. Kolgha (same as No. 98).
100. Kolhati (same as No. 96).
101. Koli Dhor.
102. Koli Mahadev.
103. Koli Malhar.
104. Koli Suryavanshi.
105. Kongadi.
106. Konkna.
107. Korava (section of No. 85).
108. Korcha (section of No. 85).
109. Korchar.
110. Kotegar (in North Kanara)
111. Kotwal (same as No. 112).
112. Kotwalia (same as No. 111).
113. Kunbi Tilori (in the Ratnagiri District).
114. Kunchi Korava (section of No. 85).
115. Lamani.
116. Lingader.
117. Machigar.
118. Madig (same as No. 123).
119. Mahar.
120. Mahyavanshi.
121. Mairal.
122. Manbhav.
123. Mang (same as No. 118).
124. Mangela.
125. Mang-garudi.
126. Mavchi.
127. Me.
128. Meghval (same as No. 129).
129. Menghwar (same as No. 128).
130. Mini Madig.
131. Mochi.
132. Mochigar (same as Nos. 33 and 165).
133. Modikar (same as No. 63).
134. Mukri.
135. Nadia.
136. Naikda (same as No. 144).
137. Naikmakkalu (same as Nos. 15, 17, 138, 184 and 199).
138. Naikwadi (same as Nos. 15, 17, 137, 184 and 199).
139. Nandhari (same as No. 140).
140. Nandhari-paik (same as No. 139).
141. Nandiwale.
142. Nat.
143. Nath.
144. Nayak (same as No. 136).
145. Od.
146. Padharia.
147. Padiar.
148. Pangul.
149. Pardhi.
150. Patelia.
151. Patharvat.
152. Patradavaru.
153. Phanse Pardhi (same as No. 1 and section of No. 149).
154. Phugdi.
155. Ponla.
156. Powara.
157. Rachevar.
158. Raikari.
159. Ramoshi.
160. Rathawa.
161. Ravalia.
162. Rohit.
163. Sahadev Joshi.

164. Salat.
165. Samagar (same as Nos. 33 and 132).
166. Sangar.
167. Sanjogi.
168. Sansia (same as Nos. 39, 88 and 89).
169. Sarania.
170. Sarodi.
171. Sarvade.
172. Shenva (same as No. 177).
173. Shikari.
174. Shikligar.
175. Shingadya (same as No. 176).
176. Shingdav (same as No. 175).
177. Shindhya (same as No. 172).
178. Sochi.
179. Sudgadsidhar.
180. Suler.
181. Suppaling.
182. Tadvi Bhil.
183. Takari (same as Nos. 19, 64 and 191).
184. Talvar (same as Nos. 15, 17, 137, 138 and 199).
185. Thakar.
186. Thakur.
187. Timali.
188. Tirgar.
189. Tirmali.
190. Turi
191. Uchlia (same as Nos. 19, 64 and 183).
192. Vaddar.
193. Vadi.
194. Vaghri.
195. Vaidu.
196. Vaiti.
197. Vakkals (in the Kanara District).
198. Valhar.
199. Valmiki (same as Nos. 15, 17 137, 138 and 184).
200. Valvai.
201. Vanjari.
202. Vankar.
203. Varli.
204. Vasava.
205. Vasudev.
206. Vir.
207. Vitholia.
208. Wansfoda.

SCHEDULE C.

(*See* Rule 6 of the Bombay Primary Education Rules, 1949.)

Rules for the Election of Members of the School Board.

1. *President to fix place and dates for election.*—The President of the District Local Board or the authorised Municipality as the case may be, shall fix the date for the election of (1) the representatives of non-authorised municipalities and (2) the remaining members of the School Board. In each case, he shall also fix the date, hour and place for the following stages of the election, namely :—

(1) receipt of nomination papers,

(2) scrutiny of nomination papers,

(3) recording of votes,

(4) receipt of voting papers from non-authorised Municipalities,

(5) counting of votes.

The date for the receipt of nomination papers shall be not less than two weeks before the date fixed for recording of votes. The date fixed for scrutiny of nomination papers shall not be less than one week before the date fixed for recording of votes.

2. *Notice of election.*—At least four weeks before the date fixed for recording of votes, the President shall cause a written notice of such date and of the place, dates and hours fixed under rule 1 for the various stages of the election to be—

(*i*) in the case of District Local Boards,—

(*a*) sent to every member of such Board,

(*b*) sent to every non-authorised municipality concerned ;

(*c*) posted in some conspicuous place in the offices of the Presidents of the District Local Boards, of the Mamlatdar or Mahalkari of the taluka or mahal, as the case may be, and in such other places as the President may appoint ; and

(*d*) published in such manner as the President may deem fit ; and

(*ii*) in case of authorised municipalities,—

(*a*) sent to every member of such municipalities,

(*b*) sent to every non-authorised municipality concerned ;

(*c*) posted in some conspicuous place in the office of the municipality and in such other places as the President may appoint ; and

(*d*) published in such manner as the President may deem fit.

3. *Returning Officer.*—The President of the District Local Board or the authorised municipality shall be the Returning Officer :

Provided that—

(*a*) the President may, whenever he thinks necessary, and shall, when he himself is a candidate to the election, appoint, by a written order made not less than one week before the date fixed for the receipt of nomination papers, the Vice-President (if the Vice-President is himself not such candidate) or the Chief Officer to be the Returning Officer ;

(*b*) when the President and the Vice-President are both candidates to the election and there is no Chief Officer, the District Local Board or authorised municipality shall appoint such other member as is not a candidate at the election to be the Returning Officer.

4. *Nomination of candidates.*—(1) On or before the date and at the time appointed under rule 1 for the receipt of nomination papers, each candidate shall either in person or by his proposer and seconder deliver to the Returning Officer, a nomination paper duly completed in the form in Appendix I to this Schedule and subscribed by the candidate himself as assenting to the nomination and by two members of the electing local authority concerned as proposer and seconder. Nomination papers in the prescribed form shall be supplied by the Returning Officer to every candidate or any other person on his behalf asking for the same :

Provided that in the case of a candidate for election as a representative of non-authorised municipalities, the proposer and seconder subscribing the nomination paper shall be members of any of the said electing municipalities.

(2) The proposer and seconder shall be present at the time of presentation of the nomination paper to the Returning Officer who shall ascertain there and then, that the proposer and the seconder have willingly signed the nomination paper. If either the proposer or the seconder expresses his unwillingness to acknowledge his having signed the nomination paper, the candidate may present a fresh nomination paper.

5. *Scrutiny of nomination paper.*—On the date appointed for scrutiny of nomination papers the candidates and one proposer and one seconder of each candidate and one other person for each candidate duly authorised in writing by each candidate, but no other person may attend at the appointed time and place and the Returning Officer shall give them all reasonable facilities for examining the nomination papers of all candidates which have been delivered within the time and in the manner prescribed in rule 4.

6. *Disposal of objections : Rejection of nomination.*—(1) The Returning Officer shall examine the nomination papers and shall decide all objections which may be made to any nomination and may either on such objection or on his own motion, after such summary inquiry, if any, as he thinks necessary refuse any nomination on any of the following grounds :—

(*i*) that the candidate is ineligible for the vacancy or vacancies for which he has been nominated ;

(*ii*) that there has been any failure to comply with any of the provisions of the Act or the rules made thereunder ;

(*iii*) that the signature of the candidate or of any proposer or seconder is not genuine or has been obtained by fraud.

(2) Where a member has subscribed as proposer or seconder a larger number of nomination papers than there are vacancies to be filled, only such of the papers so subscribed as have been first received, up to the number of vacancies to be filled shall be deemed to be valid.

(3) Nothing contained in sub-rule (2) shall be deemed to authorize the refusal of the nomination of any candidate on the ground of irregularity in respect of nomination paper, if the candidate has been duly nominated by means of another nomination paper in respect of which no irregularity has been committed.

7. *Completion of scrutiny.*—(1) The Returning Officer shall endorse on each nomination paper his decision accepting or rejecting the same, and, if the nomination paper is rejected, shall record in writing a brief statement of his reasons for such rejection.

(2) The scrutiny shall be completed on the day appointed in this behalf and no adjournment of proceedings shall be allowed.

8. *Appeal against rejection of a nomination paper.*—(1) An appeal may be made to the Collector against an order of the Returning Officer rejecting a nomination paper within three days from the date of the order of the Returning Officer.

(2) On application made by any candidate whose nomination paper has been rejected, the Returning Officer shall forthwith grant the candidate a copy of the order rejecting his nomination paper.

(3) The candidate making an appeal shall forthwith forward a copy of the memorandum of appeal to the Returning Officer.

(4) The Collector shall decide the appeal as soon as possible and shall communicate his decision to the Returning Officer beore the date fixed for recording of votes.

(5) The decision of the Collector shall be final and the Returning Officer shall give effect to it.

9. *Preparation of list of valid nominations.*—On the completion of the scrutiny of nominations, the Returning Officer shall forthwith cause a list of valid nominations for each class of vacancies (excepting nominations for seats of representatives of non-authorised municipalities) to be prepared under his signature and cause it to be affixed in some conspicuous place in his office and at the place at which the election is to be held. He shall also cause a copy of the list to be sent to every member of the District Local Board or the authorised Municipality, as the case may be, showing therein the qualifications, viz., the details mentioned in Appendix I (of Schedule C) —Nomination Paper—of each of the candidates.

10. *Election of representatives of non-authorised Municipalities.*—The Returning Officer shall also communicate the valid nominations for seats of representatives of non-authorised municipalities to the Presidents of such municipalities and ask them to record the votes of such municipalities in Form II prescribed in Appendix II appended to this Schedule.

11. *Procedure at uncontested election.*—After the scrutiny of nomination papers, should the number of duly nominated candidates for any class of vacancies not exceed the number of vacancies in that class, the Returning Officer shall declare such candidates to be duly elected for that class.

12. *Right to be nominated to two or more vacancies.*—When elections for two or more constituencies are to be held at or about the same time, one and the same person may be nominated as a candidate for election for each such class of vacancy provided he is otherwise duly qualified.

13. *Withdrawal of candidature.*—Any person nominated under rule 4 may withdraw his candidature at any time on or before the date fixed for recording of votes under rule 1, by notice in writing subscribed by him and delivered to the Returning Officer. Such withdrawal shall make his nomination void. When such notice is delivered before the voting has begun and such withdrawal has the effect of leaving the election uncontested, the Returning Officer shall declare the remaining candidate or candidates, as the case may be, to be duly elected.

14. *Voting.*—(1) When there are more candidates for each class of vacancies than there are vacancies in the class and the question of voting arises, the voting shall be by ballot.

(2) The Returning Officer shall preside at the place fixed for recording of votes and receive votes thereat and provide himself with a box for receiving votes recorded at the election.

(3) Before the commencement of the poll, the Returning Officer shall show the ballot box empty to such candidates and such members of the District Local Board or the authorised Municipality as may be present at the polling station and shall then

lock it up and seal it in such manner as to prevent its being opened without breaking the seal. The ballot box shall then be placed within a screened partition.

(4) Every member of the District Local Board or authorised municipality desirous of recording his votes at the election shall attend for the purpose on the date and at the time and place appointed for recording of votes under rule 1. When a member presents himself at the polling station, he shall be provided by the Returing Officer with a voting paper in the appropriate form out of the two forms given in Appendix II to this Schedule. Before receiving the voting paper, the member shall sign the counterfoil thereof. No voting paper shall be issued after the closing hour appointed for recording of votes under rule 1 above but any member who has been given the voting paper before the closing hours shall be allowed reasonable opportunity to record his vote.

(5) After receiving his voting paper, the member shall proceed to the voting partition which shall be screened and shall record his votes there. The member shall have as many votes as there are vacancies and may give one or more votes to any candidate. The member shall put one cross in pencil against the name of the candidate for every vote he wishes to give to the candidate. If the member does not wish to record his vote or votes in the case of any candidate or candidates of any class of vacancies, he shall leave the appropriate part of his voting paper blank. Only one member shall be allowed in the voting partition at a time.

(6) There shall be no voting by proxy.

(7) The Returning Officer shall give such assistance as may be required to any member who is under any disability which incapacitates him from voting in the manner prescribed.

15. *Counting of votes.*—(1) The Returning Officer shall on the date and at the time and place appointed for the counting of votes under rule 1 in the presence of two members of the District Local Board or the authorised municipality who are not candidates and of any candidates in attendance open the ballot box and separate the voting papers which he deems valid from those which he rejects, endorsing on the latter the word "rejected" and the grounds of rejection.

(2) The Returing Officer may reject any voting paper on or by which the voting member has recorded more votes than he is entitled to or which bears any writing or a mark by which in the opinion of the Returing Officer, he is intended to be identified or which is unmarked or void for uncertainty.

(3) The Returning Officer shall then count the valid votes given to each candidate. He shall in respect of each vote put a cross against the name of the candidate who has received it in the appropriate form out of the two forms given in Appendix III to this Schedule.

(4) He shall, upon the completion of the counting, seal up in separate packets, endorsing on each a description of its contents and the date of the election to which it refers, the voting papers counted and the voting papers rejected. He shall also prepare the voting paper account and verify it by comparing it with the number of voting papers counted or rejected as aforesaid and of the unused voting papers.

(5) He shall then prepare and certify a return setting forth—

(i) the result of the verification referred to in sub-rule (4);

(ii) the names of the persons for whom valid votes are given;

(iii) the number of valid votes given for each person;

(iv) the number of votes declared invalid and permit any candidate to take a copy of or an extract from the return.

(6) The Returning Officer may at any stage adjourn the proceedings under this rule after giving notice of the date and hour at which proceedings will be resumed to the candidates and members of the electing local authority present.

16. *Declaration of results.*—When the counting of votes has been completed, the Returning Officer shall forthwith declare the candidate or candidates to whom the largest number of votes has been given to be elected. In the case of seats of representatives of non-authorised municipalities the candidates who secure the largest number of votes in the Form II given in Appendix III to this Schedule, shall be declared as elected. If there is an equal number of votes in favour of each of two or more candidates for one vacancy, the selection shall be determined by the Returning Officer by lot.

17. *Multiple elections.*—(1) If any person is elected to more than one vacancy on the School Board, he shall, by notice in writing signed by him and delivered to the Returning Officer within three days from the date of the declaration of the result of such election under rule 16, choose for which of these vacancies he shall serve and on such choice having been made, the result of the election shall, in every other vacancy to which such person has been elected, be determined as if no votes had been recorded for him.

(2) If such person does not make the choice referred to in sub-rule (1), the elections of such person shall be void and the results of the elections shall be determined as if no votes had been recorded for him.

18. *Publication of results.*—As soon as the results of the elections are declared, the Returning Officer shall cause them to be posted up in some conspicuous place in his office and shall without delay report the results to the District Local Board or the authorised Municipality.

19. *Custody of election papers.*—The Returning Officer, if he is the President shall retain in his custody or in case he is not the President shall hand over to the President for custody the return and the packets referred to in rule 15 and all other documents relating to the election.

20. *Production and inspection of election papers.*—(1) While in the custody of the President the packets of voting papers, whether counted or rejected, and of the counterfoils thereof shall not be opened and their contents shall not be inspected or produced except under the orders of a competent court or of Government.

(2) All other documents relating to an election in the custody of the President shall be open to inspection by the members of the electing body or by any servant of the State Government duly authorised in this behalf.

21. *Destruction of election papers.*—The President shall unless otherwise directed by a competent court or by Government cause all papers relating to an election to be destroyed after the lapse of one year from the date of the declaration of the result.

APPENDIX I TO SCHEDULE C.

Form of Nomination Paper.

(*See* rule 4 in Schedule C.)

District Local Board / Municipality of

* Description of the vacancy for which the candidate is nominated.

Name of candidate with father's name and surname, if any.

Age and sex—

Educational qualifications—

Address—

Name of the proposer—

Signature of the proposer.

Name of the seconder.

Signature of the seconder.

Declaration by Candidate.

I hereby signify my willingness to serve if I am elected.

Date. Signature of Candidate.

* Women, minorities, backward communities, persons possessing special educational qualifications, general and non-authorised Municipalities.

APPENDIX II TO SCHEDULE C.

Form of Voting Paper.

(*See* rule 14 in Schedule C.)

I

Form of voting paper for vacancies of members other than representatives of non-authorised Municipalities.

District Local Board / Municipality of

Counterfoil of Voting paper. *Outerfoil (Front).*

Voting Paper.

—	Description of the class of vacancies to be filled by election.	Number of posts to be filled.	Names of candidates (Valid nominees).	Cross ×.
1. Name of Elector.	1. Women			
	2. Representatives of Minorities—			
	(*i*) Muslims			
	(*ii*) Indian Christians ..			
	(*iii*) Hindus other than the Backward Classes.			
	3. Representatives of backward communities.			
Signature of Elector.				
	4. Persons who have passed the Matriculation or Second Year Training Certificate Examination.			
	5. General seats			

Note.—A separate voting paper should be used for each class of vacancies mentioned above, the entries relating to other classes of vacancies being scored out.

(Back of outerfoil.)

INSTRUCTIONS IN CONNECTION WITH RECORDING OF VOTES.

(1) For each class of vacancies you have the number of votes shown against the description of that class.

(2) Put a cross or crosses against the name of the candidate / each of the candidates for whom you wish to vote.

(3) You must *not* put against any class of vacancies more crosses than the number shown against the description of that class.

II

Form of voting paper for vacancies to be filled by representatives of non-authorised Municipalities.

Name of Municipality .....

Names of candidates (valid nominees).	Cross (×).
Mr.	
Mr.	
Mr.	
Mr.	

President,

.....Municipality.

Note 1.—If the number of representatives of non-authorised Municipalities to be elected is one, the cross should be placed against the name of the candidate whom the Municipality wishes to elect. If the number of representatives to be elected is 2, both the crosses (x x) may be placed against the name of any one candidate in case the municipality concerned wishes to elect only one candidate or one cross (x) each may be placed against the names of two candidates in case the municipality wishes to elect two candidates.

Note 2.—A voting paper shall be invalid if—

(*a*) a cross is not placed against the name of any candidate,

or

(*b*) a cross is placed opposite the names of more than the number of candidates to be elected,

or

(*c*) The voting paper is not signed.

APPENDIX III TO SCHEDULE C.

Form of Consolidating the Votes Recorded for the Election of Members of the School Board other than the Representatives of Non-Authorised Municipalities.

(*See* rule 15 in Schedule C.)

I

Class of vacancies to which members are to be elected with the number of seats shown in brackets.	Names of valid nominees.	Votes recorded by members.												Total number of votes.
		1	2	3	4	5	6	7	8	9	10	11	12 & so on.	
1. Women ( ) ..	1													
	2													
	3													
	4													
2. Representatives of Minorities—														
(*i*) Muslims ( )..	1													
	2													
	3													
	4													
(*ii*) Indian Christians ( ).	1													
	2													
	3													
	4													
3. Backward Communities.	1													
	2													
	3													
	4													
4. Seats requiring special educational qualifications, i.e., Matriculation or Second Year Training Certificate Examination ( ).	1													
	2													
	3													
	4													
5. General Seats ..	1													
	2													
	3													
	4													

Date.

President, District Local Board. / Authorised Municipality.

Form for consolidating the votes recorded by each non-authorised Municipality.

(*See* rule 15 in Schedule C.)

II

Name of valid nominees.	Votes recorded by the Municipality of											Total number of the votes.
	1	2	3	4	5	6	7	8	9	10	11	
Mr. ..												
Mr. ..												
Mr. ..												
Mr. ..												
Mr. ..												
Mr. ..												
Mr. ..												
Mr. ..												

Date Signature of Returning Officer.

SCHEDULE D.

(*See* rule 12 of the Bombay Primary Education Rules, 1949.)

Rules for the election of Chairman or Vice-Chairman of a School Board.

(1) At the meeting called for electing a Chairman or a Vice-Chairman each candidate wishing to be elected as Chairman or Vice-Chairman shall deliver to the President of the meeting a nomination paper in the sub-joined form subscribed by the candidate himself as assenting to the nomination and signed by two other members as proposer and seconder.

Nomination paper for election as $\frac{\text{Chairman}}{\text{Vice-Chairman}}$

$\frac{\text{District School Board of}}{\text{Municipality of}}$

I hereby propose that Mr.
be elected as $\frac{\text{Chairman}}{\text{Vice-Chairman}}$ of the School Board.

Date Signature of the proposer Member.

I second the above proposal.

Date Signature of the seconder Member.

Declaration of the Candidate.

I hereby signify my willingness to serve as $\frac{\text{Chairman}}{\text{Vice-Chairman}}$ if I am elected.

Date Signature of the Candidate.

(1A) If only one nomination paper is received for the office of the Chairman or the Vice-Chairman, the President of the meeting shall declare such candidate to be duly elected to the office of the Chairman or the Vice-Chairman, as the case may be.

(2) If the number of nomination papers received for the office of the Chairman or the Vice-Chairman is more than one, the President of the meeting shall arrange to prepare voting papers in the sub-joined form containing names of candidates who have been duly nominated and shall supply such voting paper to every member of the School Board present at the meeting :—

Voting paper for the election of a $\frac{\textit{Chairman.}}{\textit{Vice-Chairman.}}$

Name of the candidate.	Put only one cross against the name of the candidate for whom you wish to vote.
1.	..
2.	..
3.	..
4.	..

(3) The President of the meeting shall then show the ballot box empty to all such candidates and other members of the School Board present at the meeting and shall then lock it up, seal it and place it in front of him.

(4) Every member desirous of recording his vote shall proceed to a screened partition, where only one member shall be allowed at a time, and shall put one cross in pencil against the name of the candidate to whom he wishes to give his vote and shall then put his voting paper in the sealed ballot box.

(5) A member who does not desire to record his vote at the election shall return his voting paper to the President of the meeting who will make a remark to that effect on it.

(6) After all the members desirous of recording their votes have put their voting papers in the ballot box, the President of the meeting shall open the box, in the presence of the members attending the meeting, separate the voting papers, reject any voting paper on which the voting member has recorded his vote in such a manner that it is not possible to identify the persons to whom he wishes to give his vote, shall count the votes given to each candidate and then declare the candidate who has secured the largest number of votes as duly elected.

(7) In case of equality of votes the result of the election shall be determined by lot to be drawn in the Presence of the President of the meeting in such manner as he may determine.

(8) The President of the meeting shall then collect all the voting papers including the blank ones returned by any members and all other papers relating to the election of the Chairman or Vice-Chairman, make a list of them and hand them over to the Administrative Officer of the School Board, who shall keep them in his custody for a period of at least six months from the date of the election and shall make them available for inspection by the members of the School Board or by any servant of the State Government duly authorised in this behalf.

(9) The Administrative Officer shall unless otherwise directed by a competent court or by the State Government cause all the papers relating to the election of a Chairman or Vice-Chairman, as the case may be, to be destroyed after the lapse of six months from the date of the election.

SCHEDULE E.

DUTIES OF ATTENDANCE OFFICERS.

(*Vide* rule 68 of the Bombay Primary Education Rules, 1949.)

1. *General.*—(1) Every Attendance Officer shall make himself thoroughly acquainted with the provisions of sections 30 and 32 to 37 of the Bombay Primary Education Act, 1947, and rules in Chapter VI of the Bombay Primary Education Rules, 1949, regarding attendance and enforcement of compulsion and with the Attendance Regulations framed by the School Board, if any, or the Model Regulations in Schedule G to the Bombay Primary Education Rules, 1949.

(2) Each Attendance Officer shall regularly, promptly, and accurately make all requisite entries in his books or registers and have all forms, reports, books or registers posted up-to-date, and ready for immediate use or inspection. He shall assist the Administrative Officer or any other officer nominated by him in compiling statistics and in preparing reports or statements and undertake such other duties as may be required of him by the Administrative Officer or the Assistant Administrative Officer.

(3) Each Attendance Officer shall give his whole time to the service of the School Board and shall not engage himself in any other trade or employment without the previous consent of the School Board Administrative Officer.

(4) No Attendance Officer shall divulge the nature of his duties or instructions or the information he may acquire in the course of his duties to any one not being a member of the School Attendance Committee or the Chairman of the School Board or the Administrative Officer or the Assistant Administrative Officer. He shall refer inquiries on such subjects to the Administrative Officer.

2. *Organisation of Census Work.*—(1) Every Attendance Officer, if called upon by the Administrative Officer, should suggest suitable dates for the first and subsequent annual census of children of school-going age in the villages or areas in his charge;

(2) About a week prior to the commencement of the actual census, the Attendance Officer shall, as directed by the Administrative Officer, hold meetings in suitable centres of all Enumerators and Supervising Enumerators for groups of neighbouring villages and explain to them the nature of the work they have to do and the difficulties they are likely to meet with, impress upon them the importance of taking a correct and complete census and ask them to exercise the greatest possible care and vigilance while taking the census. The fact should be stressed that if the parent of a child escapes enumeration at the census, he generally escapes all the penal sections

of the Bombay Primary Education Act. At this meeting each enumerator should be supplied with—

(*i*) the necessary census forms ;

(*ii*) copies of notice to the public of the probable days and time of the census to be put up in the villages or areas in which compulsion is proposed to be introduced ; and

(*iii*) copy of the instructions for the guidance of enumerators and supervising enumerators. (These instructions are printed separately in regional languages).

(3) While the census work is going on, each Attendance Officer shall visit as many villages as possible, and check the census work and see that the instructions for taking the census are observed by the enumerators and supervising enumerators. The Attendance Officer shall also try to remove the difficulties, if any, met with by the enumerators and supervising enumerators in getting the information required for the census.

(4) After the census work is completed the Attendance Officer shall arrange, with the help of enumerators and supervising enumerators, to get 3 copies of the following statements duly prepared in the prescribed forms and checked by the supervising enumerators :—

(*i*) A census register of all children in each village or ward of the town who will be liable for compulsion from the beginning of the next school year ;

(*ii*) Separate lists of boys and girls liable for compulsion from the beginning of the next school year and not attending any school at the time of the census ;

(*iii*) Separate lists of boys and girls liable for compulsion from the beginning of the next school year according to their mother-tongue ; and

(*iv*) Separate lists of boys and girls liable for compulsion from the beginning of the next school year according to communities.

(5) Each Attendance Officer shall assist the Administrative Officer in the consolidation of census statistics and preparation of the various statements forming part of the scheme of compulsion.

(6) Each Attendance Officer shall be responsible for maintaining a correct and up-to-date Census Register for each village or ward of a town in his charge. The Census Register, which should be regarded as a permanent document, can be kept up-to-date by—

(*i*) the removal of the names of children who have ceased to come under the compulsory scheme for a valid reason such as (*a*) death, (*b*) completing the compulsory course, (*c*) completing the school year after completing the compulsory age, (*d*) being eligible for any of the exemptions under section 33 of the Act or (*e*) leaving the compulsory area ;

(*ii*) the addition of the names of all children of compulsory age whose names do not appear in the register either because (*a*) they came into the compulsory area after the census or because (*b*) they escaped enumeration at the time of the census. The names of such of these children as voluntarily come to school can be obtained from the school register. The names of children who have been voluntarily attending school before the compulsory age, and who attain the compulsory age during the course of the year shall also be added to the lists.

3. *Issue of Attendance Notices and Orders.*—(*a*) Each Attendance Officer shall, as directed by the Administrative officer arrange to prepare notices of attendance to be given to parents of children liable for compulsion and arrange for their distribution to the parents concerned at least two months prior to the day on which the children must first attend a school as required by the rules in Chapter VI of the Bombay Primary Education Rules, 1949.

(*b*) The Attendance Officer, if authorised by the School Board, shall inquire into the applications by parents for exemption under section 33 of the Act and after hearing what the parents have to say shall pass on the applications within a fortnight of the receipt of such applications to the Administrative Officer or to any other person or committee as directed by the Administrative Officer, together with this recommendations as to whether the excuse of the parent for exemption should or should not be granted or granted for a short period only.

(*c*) After the School Board or the member of the School Board or the officer authorised by the School Board under section 34(2) has given a decision on the parent's application for exemption, the Attendance Officers, if authorised by the School Board, should issue attendance orders as required by section 34 (1) of the Act to the parents concerned.

4. *School Attendance Reports.*—(1) The Attendance Officer shall then supply the head teacher of each primary school in the village or ward of a town in his charge a list of all children liable for compulsion, (including those non-attending children whose parents have been ordered to cause them to attend a school) and inform him of the date or dates from which the attendance of such children is compulsory as required by the rules in Chapter VI of the Bombay Primary Education Rules, 1949.

(2) The Attendance Officer should also ask the head teachers of primary schools in his charge to report to him within a week of the commencement of the school year the names of any such children from the list who do not attend school.

(3) The Attendance Officer should also obtain from the heads of schools, by the 5th of every month, a report in the form prescribed, giving the names of children liable for compulsion who have failed to attend or have not attended regularly during the preceding month and also of those who joined or left the school during the month. These reports will enable the Attendance Officers to maintain the Census Register correct and up-to-date after verification.

(4) On receipt of such reports from heads of schools, the Attendance Officer, if authorised by the School Board, should issue Attendance Notices to parents whose children are not attending school or attending irregularly and arrange to distribute these notices to the parents concerned.

5. *Visits to schools and homes of pupils.*—(1) The Attendance Officer shall visit schools in his charge systematically and preferably at least once every month and ascertain from the head master or head mistress whether each child who was reported to be absent in the previous month is attending the school and obtain from the head of the school an attendance slip of each school going pupil who is absent and (unless the head teacher knows that there is a satisfactory reason for such absence) shall at once visit the home of the absentee pupil and make inquiries.

(2) The Attendance Officer shall also make particular enquiry about all children whose names are for any cause removed from the register of any school and keep such cases strictly in view until the children are admitted into another school (unless he is satisfied that the children have left the village and gone elsewhere).

(3) The Attendance Officer shall visit the homes of absentee pupils preferably in the morning or in the evening. In visiting the homes of pupils it will be the duty of the Attendance Officer to ascertain whether every child of school-going age is receiving satisfactory instruction, in case of neglect, to ascertain the real cause ; to explain to the parents the requirements of the law ; to urge upon them the necessity of at once complying with those requirements and to furnish them, if requested, with information as to the suitable approved schools in the neighbourhood (but the Attendance Officer must scrupulously avoid using influence in favour of any particular school as the choice of school rests absolutely with the parents). Where a child is said to be attending a private school or to be under efficient instruction in some other manner the Attendance Officer must use his judgment and make enquiries as to the correctness of the statement.

(4) Cases of frequent absence from school owing to sickness should be vouched for, if possible, by a certificate of a duly qualified medical practitioner stating the nature of the illness and its probable duration. When dealing with those who attend a school irregularly the Attendance Officers should explain to the parents the requirements of Attendance Regulations framed by a School Board. Where a child is prevented from attending school by sickness or any unavoidable cause, it will be necessary to see that the child is not detained at home after recovery from sickness or when the cause of detention ceases. When it is suspected that a contagious or infectious disease is the cause, the case should be immediately reported to the Administrative Officer who will communicate with the Medical Officer of the District.

6. *Enforcement of Compulsion.*—(1) The Attendance Officer if authorised by the School Board under section 34 (*2*) of the Act, shall prepare cases for prosecution and lodge complaints under section 35 of the Act before a Magistrate, village bench or other person competent to take cognisance of an offence committed by any parent for failure to cause his child to attend the school.

(2) The Attendance Officer, if authorised by the Administrative Officer, shall first issue a warning to a person who employs a child liable for compulsion so as to interfere with its instruction, and if this warning has no desired effect, he shall lodge a complaint under section 36 before a Magistrate competent to take cognisance of such offence against the employer concerned.

(3) The Attendance Officer shall attend the Court of a Magistrate, village bench or other person authorised in this behalf and report to the School Attendance Committee or the Administrative Officer as directed by him the decision of the case.

7. *Monthly Reports.*—Every Attendance Officer shall send each month to the School Board or committee or officer authorised by the School Board for this purpose, a correct report of his month's work including (*a*) the number of visits to houses, (*b*) the number of visits to schools. (*c*) the number of cases reported to the School Attendance Committee or the Administrative Officer, (*d*) the number of truant or wandering children found during the month, (*e*) the number of children of school-going age found not attending any school ,(*f*) the number of warnings issued under section 36 of the Act to employers responsible for employing children liable for compulsion, (*g*) the number of complaints lodged before a Magistrate, village bench or other competent person under sections 35 and 36 of the Act, (*h*) a statistical statement showing particulars of children, their attendance etc., in the school in his beat and (*i*) any other matter of importance which the officer may deem it necessary to bring to the notice of the School Attendance Committee or the School Board.

SCHEDULE F.

[*Vide* rules 106 (2) and 111 (2) (*d*) of the Bombay Primary Education Rules, 1949.]

Model Conditions of Employment of Teachers in Private Schools.

(*N.B.*—The conditions of employment given in this Schedule are in respect of teachers employed in approved private schools. Unless the management of the schools prescribe other conditions with the approval of the Deputy Educational Inspector these model conditions shall be applied.)

1. *Pay.*—Scale of pay.

2. *Provident Fund.*—A teacher shall subscribe to the Provident Fund according to the rules in force.

3. *Vacation pay.*—If a teacher is appointed for the major part of the term, he shall be entitled to vacation pay at the end of the term: Provided that if the temporary appointment is in a post which is not permanently vacant, and some other teacher is drawing pay for the vacation and the temporary teacher has been duly informed of this position, the latter shall not be entitled to vacation pay.

4. *Discipline.*—All teachers shall be subject to the general rules of discipline and conduct and such other rules and instructions as may be issued by the management.

5. *Period of probation.*—Unless it is a purely temporary vacancy, a teacher shall ordinarily be on probation for a period of two years from the date of his first taking over charge of his appointment.

6. *Permanent teacher.*—(1) If a teacher is professionally qualified and appointed to a permanent vacancy, he will be regarded as a permanent teacher after a service of two years for purposes of leave, and notice of discharge.

(2) An agreement shall be entered into between a teacher made permanent and the management in Form C in Appendix C to these rules.

7. *Teaching qualifications.*—All untrained teachers shall be required to get such teaching qualifications as may be laid down by Government within a specified period. Failure to get such qualifications may entail discharge from service.

8. *Leave.*—Leave cannot be claimed as of right. Discretion to refuse or cancel leave of any description is reserved to the Head Teacher or Manager of the school.

9. Casual leave or unofficial leave may be given for special and unforeseen circumstances for a period of not more than six days at a time, the total period of leave in a year being limited to a fortnight. Casual leave cannot be prefixed or affixed to any kind of leave or to holidays except Sundays.

10. *Other leave.*—(*a*) Temporary teachers shall not be entitled to any leave with pay, other than casual leave.

(*b*) *Permanent teachers.*—Leave on Medical Certificate on half-average pay not exceeding three months at any one time at the rate of 1/11th of active duty may

be granted, the total period of such leave being limited to 12 months in the whole service. A Medical Certificate shall, if required by the management of the school, be produced by the teacher from the Civil Surgeon or a registered Medical Practitioner named by the Management of the school.

11. *Termination of services.*—It shall be open to the school authorities to dispense with the services of temporary teachers without assigning any reasons after giving one calender month's notice. In the case of a permanent teacher, the school authorities shall be entitled to dispense with his services after giving a school term's notice but in case of the reduction of establishment after giving three calender months' notice.

In the case of insubordination, neglect of duty or misconduct, it shall be open to the school authorities to dispense with the services of any teacher without notice after due inquiry. In such a case for the purposes of the inquiry, the teacher will be furnished in writing with the charges against him and called upon to submit his explanation in writing within one week from the date of the receipt by him of the letter containing the charges. In the event of his failure to submit an explanation within the above period the management may dismiss him forthwith. While framing the charges against any teacher the remarks of the Inspecting Officer on the work and conduct of the teacher shall be taken into consideration.

12. *Resignation.*—No teacher shall leave service without giving a calendar month's notice in the case of temporary teachers, and a school term's notice in the case of permanent teachers.

A temporary teacher giving notice during the vacation or at the beginning of the school year shall not be entitled to vacation pay.

13. *Duties.*—All teachers shall, during the period of their service, employ themselves honestly and efficiently under the orders of the Manager and shall make themselves in all respects generally useful to the school. They shall devote their whole time to the duties of the school and shall not on their own account or otherwise either directly or indirectly, carry on or be concerned in any trade or business or undertake private work or take an active part in any public activity whatsoever without having first obtained the permission of the Manager.

14. *Absence.*—No teacher shall absent himself from his duties without first having obtained the permission of the Manager in this behalf and in the case of ill-health without producing such medical certificate as may be demanded by the Head Teacher.

15. *Other activities.*—Every teacher shall carry out such duties pertaining to the school as may be assigned to him from time to time by the Manager, including duties connected with extra-curricular activities such as supervision of physical exercises, games and sports, work connected with the library and co-operative societies, ceremonial functions, etc.

16. *Misconduct.*—In the event of misconduct on the part of the teacher or of the breach by him of any of the conditions specified above, the school authorities will be entitled at any time after due inquiry to impose a penalty or to dispense with his service without notice.

17. *Representations.*—All representations of whatever nature from a teacher in connection with the employment or in connection with his school to the school authority shall always be addressed through the head of the school.

SCHEDULE G.

[*Vide* rule 125 (1) of the Bombay Primary Education Rules, 1949.]

MODEL ATTENDANCE REGULATIONS FOR ADOPTION BY SCHOOL BOARDS IN AREAS OF COMPULSION.

1. These regulations shall be called the Compulsory Attendance Regulations.

2. (1) These regulations shall extend to the areas of compulsion in

(2) They shall come into force on 19

3. In these regulations, unless there is anything repugnant in the subject or context,—

(*a*) "Act" means the Bombay Primary Education Act, 1947.

(*b*) "Child" means a child to whom the scheme applies.

(*c*) "Scheme" means a scheme prepared by the Administrative Officer of a District School Board under section 25 of the Act or by an Authorised Municipality under section 26 of the Act for providing compulsory primary education in any area ; and

(*d*) Words and expressions used in the Bombay Primary Education Act, 1947, or the Bombay Primary Education Rules, 1949, and not defined in these regulations shall have the meanings assigned to them in that Act and those Rules.

4. The daily school hours at an approved school may be divided into two sessions, each consisting of such periods of instruction as may be fixed by the School Board :

Provided that the school board may direct that on certain days there shall be only one session.

5. Every child shall, unless leave of absence is sanctioned under regulations 8, 9 or 10, be present for instruction at an approved school on every working day for at least half the periods of instruction in a session fixed under regulation 4.

6. When any child is present for instruction at an approved school for at least half the periods of instruction in a session, he shall be marked present for such session at such school.

7. A child shall not be deemed to have attended an approved school unless he is marked present under regulation 6 for—

(*i*) at least 300 sessions in a year or if the "shift system" or one continuous session has been introduced in the school, at least 150 sessions in a year, and

(*ii*) three-fourths of the total number of sessions held in each month excluding the number of sessions for which leave of absence for the child has been sanctioned under regulations 8, 9 or 10.

8. The Head Teacher may sanction leave of absence to a child for a period not exceeding seven days at a time—

(*a*) when the child is ill, or

(*b*) when any other member of his family is ill or disabled and his attendance is required at home ; or

(*c*) when his presence is specially required by his parents to help them in their vocation.

A report of leave sanctioned under this rule shall be submitted by the Head Teacher to the attendance officer of the ward or beat.

9. If the leave applied for exceeds seven days at a time the head teacher shall forward the application to the attendance officer of the ward or beat who may grant such leave for a period not exceeding 15 days in all at a time for any of the reasons mentioned in rule 8.

10. If the leave applied for exceeds 15 days at a time, the attendance officer shall forward the application with his remarks to the Administrative Officer who may grant such leave for a period not exceeding 30 days in all at a time for any of the reasons given in rule 8.

11. Leave of absence for a period exceeding 30 days at a time shall be granted only by the School Board.

12. The Head Teacher shall, before the 5th day of every month, report to the Administrative Officer the names of children who have not attended the school for the number of sessions mentioned in clause (*ii*) of regulation 7.

13. A copy of these regulations shall be supplied to the parent of every child who is attending an approved school.

SCHEDULE H.

RULES INDICATING THE PROCEDURE REGARDING EXECUTION OF WORKS PERTAINING TO SCHOOL BUILDINGS [*vide* RULES 145 (2) (*c*) AND 150 OF THE BOMBAY PRIMARY EDUCATION RULES, 1949].

Part I—Special repairs not enhancing the original cost of the building and costing not more than Rs. 100 or such greater amount as Government may from time to time by special order fix under rule 145 (2) (c), and current and ordinary repairs to individual buildings.

A—Works costing not more than Rs. 50, and in cases where Government has fixed an amount by special order, not more than half such amount.

Estimates.—To be submitted by the Head Masters or Government Inspecting Officers.

Sanction.—To be sanctioned by the Administrative Officer and the Chairman, School Board.

Agency.—Local agency through the Head Master.

Completion certificates.—To be signed by (1) the Government Inspecting Officer of the beat, failing him a School Panch and (2) the Police Patel of the place. In the case of non-authorised Municipal Schools, the completion certificates should be countersigned by the Secretary or the Chief Officer of the non-authorised Municipality.

Bills.—To be scrutinized by the Administrative Officer and passed by the Chairman, School Board.

B—Works costing more than Rs. 50 or where an amount is fixed by Government by special order, half such amount.

Estimates.—To be framed by the Engineer of the District School Board o· Authorised Municipality or where there is no Engineer by the Overseer of the District School Board or Authorised Municipality in consultation with the Administrative Officer.

Sanction.—To be sanctioned by the School Board.

Agency —Through the District School Board or Authorised Municipality.

Completion Certificates.—To be signed by (1) School Panch, and (2) any member of the Taluka, District or School Board, whosoever is available or failing them any Officer of the Board duly authorised by the Chairman. In the case of non-authorised Municipal Schools the completion certificate should be signed by the Secretary or the Chief Officer of the non-authorised Municipality.

Bills.—To be prepared by the Engineer or Overseer of the District School Board or Authorised Municipality and passed by the School Board.

Part II—Special Repairs, New Works, etc.

(*Non-recurring.*)

N.B.—The School Board shall sanction plans and estimates for works involving an expenditure up to a limit fixed by Government from time to time in this behalf. The plans and estimates for works involving an expenditure exceeding such limit shall be sanctioned by Government or by an officer authorised by Government in this behalf from time to time in the case of District School Boards and by authorised Municipalities in the case of Municipal School Boards.

District School Board or Municipal School Board.—Plans and estimates for works involving an expenditure up to Rs. 500 inclusive.

1. All works (except those mentioned in part 1-A above), e.g. new works, special repairs, etc., shall be executed through the agency of the District School Board or Authorised Municipality.

2. For this purpose the School Boards shall call on the Engineer (or where there is no Engineer the Overseer of the District School Board or Authorised Municipality) to submit to them estimates for the works proposed which should be indicated by the School Board and also to arrange to obtain the approval of the Government, Public Works Department, and other proper authorities where

necessary (*vide* Rules 6 and 7 in Schedule I to the Bombay Primary Education Rules, 1949).

3. The Engineer or the Overseer shall submit the estimates to the School Board as early as practicable.

4. The plans and estimates shall be approved with modifications, if necessary, by the District School Board or Authorised Municipality, as the case may be, within the limit of their powers as indicated above and shall be returned to the Engineer or the Overseer with an order to proceed with the work.

5. The Engineer or the Overseer will then proceed with the work. While the work is in progress, the members of the administrative staff of the School Board concerned or any member of the School Board, whoever is available, or failing them, any officer of the Board duly authorised by the Chairman of the School Board, should report to the Chairman the defects in the construction, if any, provided that the person so authorised by the School Board is always available on the spot. No deviations in the sanctioned plans shall be made without the previous permission in writing of the Chairman, School Board, and until the deviations are approved by those officers who have approved the plans and estimates of the work.

6. On completion of the work the Engineer or the Overseer shall forward to the School Board a completion certificate, in duplicate, with a statement of expenditure on the work.

7. If the District School Board have reason to believe that the work has not been done according to specifications they shall direct the Administrative Officer to take up the matter with the Engineering Staff concerned and the Administrative Officer shall take such suitable action as may be necessary to ensure that the work is executed in accordance with the specifications. In the case of Municipal School Boards, all matters in dispute which cannot be settled with the Engineering staff to the satisfaction of the Municipal School Board, shall be referred to the Authorised Municipality for final orders.

8. The School Board being thus satisfied that the work has been completed shall countersign one copy of the completion certificate and return it to the Engineer or the Overseer.

9. The School Board shall decide which of the duties devolving on them under these rules shall be performed by the Administrative Officer and the Chairman respectively.

10. In according sanction to estimates the sanctioning authorities shall take care to see that in the case of non-recurring expenditure the conditions prescribed in rule 147, 148 or 149 of the Bombay Primary Education Rules, 1949, for qualification for the Government grant are fulfilled.

SCHEDULE I.

RULES FOR BUILDING GRANTS AND GRANTS FOR SITES (*vide* RULE 150 OF THE BOMBAY PRIMARY EDUCATION RULES, 1949).

1. In the case of non-recurring expenditure on schools maintained or approved by District School Boards or Authorised Municipalities under the provisions of the Bombay Primary Education Act, 1947, and the rules thereunder, a grant of money, hereinafter referred to as a building grant, may be given to District School Boards or Authorised Municipalities in aid of erecting, purchasing, enlarging, rebuilding or improving school buildings.

2. (i) Applications for non-recurring grants will be considered according to the priority of their receipt. Government reserve to themselves the fullest discretion in disposing of them according to the funds available.

(ii) Applications for building grants must be submitted in the following form, within one year of the date of the completion of the work, to the Director of Public Instruction who will dispose of them in accordance with the provisions of the Bombay Primary Education Act, 1947, and the rules thereunder and the means at his disposal :—

Form of Application for Building Grant.

(1) Locality.

(2) Name of the Institution.

(3) Whether the school is maintained by a District School Board or Authorised Municipality or is under private management.

(4) The specific purpose for which the grant is claimed, i.e. whether the grant is required for the construction or for the purchase of a school building, for making additions and alterations to an old one, for effecting special repairs to an existing building resulting in an increase in the original value of the building or for the purpose of purchasing a site.

(5) The total cost as detailed below and the proportion which the grant bears to it :—

(*a*) Value of the work as certified by the Government Executive Engineer of the division.

(*b*) Establishment and tools and plant charges, and the rate per cent.

(6) (*a*) Total area of the class room accommodation, and (*b*) the number of pupils for whom the building is intended.

(7) Amount of grant.

(8) Whether the Institution has previously received a building grant from Government ; if so, how much, when and under what orders.

(9) If a trust deed has been executed, the number and date of the last Government Resolution or of the letter of the Director of Public Instruction in the matter.

(10) How the site (described below) has been acquired. If it has been granted by Government, under what orders and terms.

(*a*) The site measures—

Feet.

from North { on the eastern side
to South { on the western side
and
from East { on the northern side
to West { on the southern side

(*b*) The site is bounded—
on the North by
on the South by
on the East by
and
on the West by

(*c*) Area of the site—

(11) Whether the title of the managers to the site mentioned above is good. If it has previously been declared to be good and in order, the Director of Public Instruction's number and date (if any) in the matter. Whether the entire site mentioned above has been covered by the trust-deed referred to in item No. (9) above.

(12) Whether the plans (including the site plan) and estimates have been approved, and if so, by whom ; a copy of the certificate given by such approving officers being furnished with the application, in case the plans and estimates are not countersigned by them, in token of approval.

(13) The agency by which the work was carried out.

(14) The date of the commencement of the work.

(15) The date of the completion of the work.

(16) Whether the managers are willing to get the building insured, if in the opinion of the Executive Engineer the insurance is necessary.

(17) Whether the managers are willing to execute a trust-deed or agreement in case the grant is given.

(18) Actual expenditure incurred on the work.

(19) Particulars regarding item (number) in the pertinent Audit Note on the accounts of the School Board, against which the actual expenditure mentioned above stands :—

(*a*) Year of the Audit Note.

(*b*) Page (number).

(*c*) Appendix.

(*d*) Serial or Item (number).

(*e*) Aggregate amount, if any, in which the actual expenditure has been included.

(20) Whether the actual expenditure mentioned against item No. 18 above has actually been excluded from the expenditure on which recurring grants to the District School Board or Authorised Municipality for Primary Education were based.

(21) Whether any public contributions for the purpose mentioned in item No. (4) above were received, and if so, what amount and in what year ?

(22) Whether quarters for teachers have been provided on the premises of the school, and if so, whether any, and what amount of expenditure was incurred on the quarters in this case, and whether it has been included in the expenditure mentioned in item (18) above.

Certified that the District School Board or Authorised Municipality has received no grant from Government for the work described in this application.

Dated,

Administrative Officer, District School Board—	Chairman, District School Board—
Chairman, Municipal School Board—	President, Authorised Municipality—

3. Grants made under rules 147, 148 and 149 of the Bombay Primary Education Rules, 1949, shall not exceed—

(*a*) The limit per pupil as laid down by Government from time to time.

(*b*) The expenditure provided for in the budget in the case of a District School Board, and one-half of the approved expenditure in the case of an Authorised Municipality, and

(*c*) The net cost to the District School Board or Authorised Municipality after taking into account the amount or value of the popular contributions received by it in respect of the building, etc.

Explanation 1.—In calculating the total expenditure, the cost of the building materials or labour may be taken into calculation at such valuation as Government may be pleased to fix.

Explanation 2.—In the case of school buildings, etc., which have been constructed by District School Boards or Authorised Municipalities with the aid of public contributions, either in cash or in kind, the grant shall be calculated on the gross expenditure incurred on the buildings, etc., at the rates specified in clause (*b*).

Nothing in this rule shall be deemed to compel Government to give the maximum of the grant under rules 147, 148 or 149 of the Bombay Primary Education Rules, 1949. The payment of the grant under the said rules will depend on the circumstances of each case and upon the financial condition of Government.

4. Before a building grant is sanctioned Government must be satisfied—

(i) that the means relied upon have actually been raised and are available, a declaration to this effect is appended to the application ;

(ii) that the building is intended for and will be devoted to educational purposes, and in part to secular education, and that it is suited as to site and character for the requirements of the locality where it is designed to build it ;

(iii) that the plans, estimates and specifications are satisfactory, for which purpose a certified copy of them must be forwarded with the application, to be submitted thereafter for the report of the Public Works Department, in which Department it will be finally recorded ;

(iv) that the title of the managers to the site on which the building is to be erected is good and in order.

5. (*a*) In order to show the title of the managers, the following documents and information should, as far as possible, be furnished :—

(i) Documents of title under which the managers acquired the property.

(ii) Documents of title and other evidence showing the undisturbed possession of the vendor or donor or other person from whom the managers acquired th property, or of the predecessors-in-title, for a period of at least 12 years prior to the date of the acquisition of the property by the managers.

(iii) Duly certified copies of all registered documents which cannot for sufficient reason be produced.

(iv) Evidence that those who on the documents produced dealt with the property were adult and competent to confer a title, e.g., as a sole owner, or as a manager of a Hindu joint family, or as a Hindu widow, alienating for a specific purpose allowed by law.

(v) Evidence that there are no encumbrances on the property, and a statement that the village record of rights and the indexes of the village Registrars, Sub-Registrars' and District Registrars' records relative to the property in question have been examined for 12 years prior to the acquisition by the manager.

(vi) A certified copy of any relevant entries in the Cantonment, Municipal or village records, or in the village record of rights or Register of Mutations, relating to the land.

(vii) Original receipts for any assessments or taxes paid in respect of the property.

(viii) A correct description of the property, its survey numbers and boundaries, and a map showing it and the adjoining properties and the position of any buildings on it on the site plan the dimensions, boundaries and the north point of the site should be marked and the area of the site mentioned. The site plan should be signed by a responsible officer of Government in token of its verification.

(ix) If the site has been granted by Government, the sanad granted by the Collector and if it has been acquired under the Land Acquisition Act, the Award Statement from the Land Acquisition Officer should be furnished.

If a manager professes to be acting for an association, corporation, society or other body of persons, the following will also be required :—

(x) A copy of the memorandum and articles of association or rules and regulations of the body on whose behalf he professes to be acting, so far as they relate to holding and dealing with immoveable property, the receipt of grants-in-aid and the execution of deeds, or any other documents authorizing him to acquire the property on its behalf.

(xi) His authority (if any) to receive the grant and execute the trust deed on its behalf.

(xii) Information whether the association, etc., is registered and, if so, when, where and under what Act.

(xiii) The title-deed vesting the property in the association, etc. In any complicated case, or where there may be a doubt as to the validity of the title of the managers, the latter are recommended to avail themselves of adequate legal assistance in placing their title properly before the Law Officers of Government and, if necessary, rectifying their title.

Note.—All documents of title shall, if the grant is sanctioned, be retained by Government, who shall be entitled to the possession thereof.

(*b*) In cases where the Managers have no documentary evidence to prove the title to the sites on which the School Buildings owned by them stand, an undertaking should be taken from them that they shall refund to Government the whole amount of the building grant if they are at any time declared by a Civil Court or by the Collector under sub-section (*2*) of section 37 of the Bombay Land Revenue Code, 1879, to be not in lawful occupation of the said sites.

6. A building for which an application for a grant is to be made is not to be commenced until the plans (including the site plan) and estimates have been approved in writing by (1) the President of the Authorised Municipality, (2) the Chairman of the School Board, (3) the Engineer of the District School Board or Authorised Municipality or the Executive Engineer of the district, (4)* the Health Officer of the District School Board or Authorised Municipality or the Assistant Director of Public Health and (5)* the Superintending Engineer, Public Health, Bombay, and until the expenditure has been approved as required by Rules 118, 147, 148 and 149 of the Bombay Primary Education Rules, 1949.

7. The construction of buildings by private agency shall be permitted up to any amount subject to the following conditions :—

(1) That the plans and estimates are approved by the Public Works Department, the District School Board or Authorised Municipality and Sanitary authorities ;

Note.—The permission of the Executive Engineer concerned should be obtained if the cost does not exceed Rs. 10,000, and that of the Chief or Superintending Engineer concerned if the cost exceeds Rs. 10,000, but does not exceed the limit of his powers. In all other cases the sanction of Government is necessary.

(2) That no deviations in the sanctioned plans are made without the previous permission, in writing, of the Executive Engineer ; and

(3) That the Public Works Department authorities who approve the plans are satisfied as to the competency of the private agency by which the work is to be carried out.

Note.—As regards buildings in which reinforced concrete is used, they shall not be entrusted to private agency except in places where there are contractors specialized in this kind of work.

---

* The approval of the Health Officer of the District School Board or Authorised Municipality or of the Assistant Director of Public Health in the case of the site plans and that of the Superintending Engineer, Public Health, Bombay, in the case of the work plans are required, and should be obtained.

Provided that from an engineering point of view the approval of a Superintending Engineer or of Government in the Public Works Department shall not be necessary in the following cases :—

(*a*) Where the plans and estimates are prepared or approved by a Government Executive Engineer and the estimates do not exceed Rs. 10,000 ;

(*b*) Where the plans and estimates are prepared or approved by the Engineer of a District School Board, or by the Engineer of an Authorised Municipality and the estimates do not exceed Rs. 5,000.

8. If the District School Board or Authorised Municipality has applied for a grant-in-aid from Government on account of a school building, a certificate must be obtained from the Government Executive Engineer of the district that the building is in accordance with the sanctioned site and other plans, that the work has been satisfactorily carried out, and is in good condition and that the value thereof is, to the best of his knowledge and belief, not less than the amount on which the District School Board or Authorised Municipality is claiming a grant-in-aid.

Note.—The certificate required under this rule must be obtained by the District School Board or Authorised Municipality in all cases from the Government Executive Engineer concerned who shall grant it free of charge.

9. A grant of money may be made for the purchase of a site in the same proportion as for building grants in rule 3 above. Provided that, subject to such additions and alterations as Government may direct, the conditions specified in this Schedule for building grants shall apply *mutatis mutandis* to grants for the purchase of sites. If a site required for building belongs to Government, it may be granted free or else its estimated value may be recovered from the grantee, less the amount of a money grant calculated as above.

10. No portion of a building grant shall be paid to the managers of a school, unless and until they execute or agree to execute a trust deed or an agreement, as the case may be, in accordance with the requirements of the next following rule. If, however, the building is erected on a site already covered by a trust deed, a receipt may be sufficient.

11. If the cost of the Primary school building does not exceed Rs. 2,500 or if the total amount of the building grant does not exceed Rs. 1,000 and the building is in the opinion of the Director of Public Instruction of such a description that it is not worth while requiring the execution of a trust deed, he may accept from the managers a written agreement engaging—

(*a*) to maintain the building in proper repair ;

(*b*) to manage the school in accordance with the rules and regulations of the Educational Department ;

(*c*) to subject the school to inspection by that Department ;

(*d*) to use the building as a school to be devoted wholly to education and in part to secular education ; and

(*e*) to keep the building insured in the names of the managers and the Governor of Bombay jointly if this is considered necessary by the Executive Engineer ;

(*f*) in the event of default being made by the managers in any of the preceding conditions to repay on demand by the Director of Public Instruction the aggregate amount of all building grants made by Government in respect of the school.

In every other case the managers shall execute a trust deed in such form as shall from time to time be approved by Government, either generally or specially in this behalf embodying conditions regarding—

(*g*) the construction and maintenance of the building ;

(*h*) the insurance of the building ;

(*i*) the times at which and the instalments in which the building grant shall be paid ;

(*j*) the management and inspection of the school ; and

(*k*) such other matters as Government think necessary.

Provision shall also be made in every such trust deed that in the event of default being made by the managers in the performance of any of the conditions thereof—

(*l*) the building grant, or so much of the same as shall not yet have been paid, shall lapse ;

(*m*) the aggregate amount of the building grant or grants from time to time advanced by Government for the school shall be repayable to Government ; and (except in cases where the site is granted by a private person on condition that it should revert to him in the event of the site ceasing to be used for a school or on any other condition which precludes a transfer to the Governor of Bombay).

(*n*) for the purpose of recovering any moneys so due, Government may enter upon and take possession of and sell the building ; and

(*o*) the building site, if granted by Government, may be resumed by them, and the building, if any, standing thereon may be entered upon and taken possession of by Government and may be used or disposed of by Government at their discretion for educational purposes, or if it shall appear expedient to Government, for any other purpose.

*Every such trust deed shall be prepared at the expense of the managers by the Law Officers of Government.

Note.—With reference to (*f*) and (*m*) above, if Government are satisfied that the school was closed through no default of the managers, account may be taken of any depreciation in the value of the building after expert revaluation which will take account of the state in which the building has been maintained by the managers and a proportionate reduction may be made in the amount to be claimed from the managers. In the case of a Primary school building for which an agreement has been accepted in lieu of a trust deed by the Director of Public Instruction the depreciation shall be calculated at a uniform rate of 4 per cent. per annum. If the Government grant extends to the acquisition of a site, account may be taken after expert revaluation, of any enhancement in the value of the site, and the proportionate share in such enhancement may operate as a set-off, either total or partial, against the reduction to be made in the refund due in respect of the grant for buildings.

12. Buildings in respect of which a building grant has been given must be insured irrespective of their value, for a sum representing the value of all work above plinth level, including flooring, in the names of the school managers and the Governor of Bombay jointly, provided that it shall not be necessary to insure a school building if the Executive Engineer has issued a certificate that in his opinion the risk of fire is not sufficiently great as to render insurance desirable and so long as such certificate has not been cancelled by the Executive Engineer in writing.

13. In addition to building grants as aforesaid Government will consider applications for grants-in-aid for building and carrying out special repairs to offices, boarding houses and gymnasia or of providing play-grounds, provided that the expenditure has previously been approved by the District School Board or Authorised Municipality and by the Government and that funds are available, and subject to such of the foregoing conditions as may be declared applicable by the Educational Department or to any others that may be imposed. Grants made under this rule are exceptional and Government are not pledged to give any fixed proportion, but will deal with each case on its merits and subject to financial considerations.

* Standard forms of deeds and receipts are appended for use.

FORM I.

Trust Deed to be executed by a Municipality under the Bombay Primary Education Rules, 1949.*

(Building site not granted by Government.)
Under the Bombay District Municipal Act, 1901.

THIS INDENTURE made the day of one thousand nine hundred and between the Municipality of constituted under the Bombay District Municipal Act, 1901 (hereinafter referred to as "the Municipality") of the one part, and the Governor of Bombay (hereinafter referred to as "the Government") of the other part, WHEREAS the Municipality is possessed of and absolutely entitled in perpetuity free from incumbrances to the piece of land described in the schedule hereto and intended to be hereby assured; AND WHEREAS the Municipality applied to the Government for a Building Grant-in-aid of Rupees for a school-house to be known as the and has satisfied the Director of Public Instruction, State of Bombay, that the building is intended for and will be devoted to educational purposes and in part to secular education that the plans, estimates and specifications are satisfactory that the title of the Municipality to the piece of land described in the schedule hereto is good and in order and that the building constructed AND WHEREAS by the rules now in force in the State of Bombay for regulating the application of grants made by the Government in aid of school it is provided (*inter alia*) that no portion of a Building Grant shall be paid to the managers of a school unless and until they execute or agree to execute a trust deed as in the said rules provided, AND WHEREAS the Government has sanctioned a Building Grant of Rupees which sum has been duly paid and payment of which the Municipality hereby acknowledges in consideration of the Municipality executing to the Government such conveyance or assurance as is hereinafter contained which the Municipality has agreed to do; AND WHEREAS the Commissioner, Division, has sanctioned the transfer hereby made and such sanction is recorded in his Memorandum No. date the day of 19 .

NOW THIS INDENTURE WITNESSETH that in consideration of the premises and of the sum of Rupees paid as aforesaid by the Government to the Municipality the Municipality doth hereby grant, convey and assign unto the Government ALL THAT piece or parcel of land described in the schedule hereto TOGETHER with all and singular the building and erections now being or which may hereafter be thereon expressly including the said building to be erected as aforesaid and all rights easements and appurtenances whatsoever usually held or occupied therewith or reputed to belong or be appurtenant thereto and also all fittings and fixtures being in and belonging to or used or to be used for the said school and all the estate right title interest claim and demand of the Municipality in and upon the said premises TO HOLD the said piece of land chattels and effects and all other premises expressed to be hereby assured unto and to the use of the Government according to the nature and tenure thereof respectively AND the Municipality doth hereby for itself and its successors covenant that it has power to grant all the said premises to

* Standard forms of deeds and receipts are appended for use.

the Government in manner aforesaid free from incumbrances and that the Municipality and every person claiming through or in trust for the Municipality will at all times at the cost of the Municipality execute and do all such assurances and things for the further or better assuring the said premises to the Government as aforesaid as shall be reasonably required AND it is hereby declared and agreed that the Government shall hold the said premises upon the trusts and to and for the intents and purposes following that is to say UPON TRUSTS to permit the Municipality to enter upon the said premises for the purposes and on the conditions following, namely that the Municipality and its successors shall—

(1) construct within months from the date hereof buildings thereon according to the plans and specifications approved of or as may be approved of by the Director of Public Instruction, State of Bombay, for and on behalf of the Government;

(2) maintain and keep at all times in good and substantial repair and condition all the buildings now being, or which may hereafter be on the said piece of land to the end that the same may be always efficient for use for the purposes of a school;

(3) pay all rates, charges, assessments and expenses leviable or chargeable in respect of the premises and buildings;

(4) use all the premises and buildings as and for the purposes of a public school to be devoted wholly to education and in part to secular education;

(5) manage and conduct the said school in all respects in accordance with the rules and regulations for the time being in force of the Educational Department of the Government of Bombay;

(6) keep the said school at all times open to the inspection of the Inspecting Officers of the Educational Department of the Government of Bombay; and

(7) keep at all times the building or buildings already erected or which may hereafter be erected on the said premises in respect of which a building grant has been given (except the building or buildings in respect of which the Executive Engineer of has issued a certificate that in his opinion the risk of fire is not sufficiently great as to render insurance desirable and so long as such certificate has not been cancelled by the Executive Engineer in writing) insured in the joint names of the Municipality and the Government against loss or damage by fire in a sum equal to the cost of such building or buildings including flooring but exclusive of foundation and plinth at the least in some respectable insurance office to be approved by the Government or its Agent for the time being and regularly pay the premiums which shall become payable in respect of such insurance and whenever thereunto required so to do, produce to him the policy or policies of such insurance and the receipt for the premiums paid thereon in respect of the current year and shall, unless the Municipality has forfeited its right or claim to such policy or policies of insurance as hereinafter provided apply all moneys which may be received by virtue of any such policy or policies in rebuilding or reinstating the premises destroyed or damaged;

PROVIDED ALWAYS and it is hereby declared and agreed that in the event of default being made by the Municipality in the performance of any of the conditions hereinbefore mentioned the Building Grant or so much of the same as shall not then have been made shall lapse and the aggregate amount of the said Building Grant and all future Building Grants from time to time advanced by the Government for the school shall be repayable to the Government AND for the purposes of recovering any moneys so due to Government it shall be lawful for the Government to enter upon and take possession of the said premises and all buildings, fixtures and fittings thereon and to sell and absolutely dispose of the same free from incumbrances and discharged from the trusts hereof in such manner as the Government in its absolute discretion

shall see fit and apply the proceeds of such sale after payment thereout of all costs and expenses attending the same in or towards the recouping or reimbursing to the Government the moneys which may as aforesaid have become repayable or due to the Government and pay the surplus, if any, to the Municipality or to such body or person whom the Government may consider lawfully entitled thereto and in any such event the Municipality shall forfeit to the Government all its rights or claim to, over or in respect of such policy or policies of insurance relating to the said buildings and the amount of premiums paid by it in respect of such insurance and the same shall then become absolutely the property of the Government IN WITNESS WHEREOF the President of the Municipality and and two other Councillors of the Municipality have hereunto set their hands and the common seal of the Municipality hath been hereunto affixed and Esquire, Director of Public Instruction for the State of Bombay, hath set his hand and the seal of his office hereto on behalf of the Governor of Bombay, the day and year first above written.

THE SCHEDULE ABOVE REFERRED TO.

Description and boundaries of property.

The piece or parcel of land measures in superficial area square be the same a little more or less, situated in the town/village of and bearing number in the taluka of in the district of and in the registration sub-district of in the said district and measures from North to South feet on the eastern side and feet on the western side, and from East to West feet on the northern side and feet on the southern side be the same a little more or less and is bounded as follows :—

on the North by
on the South by
on the East by
and on the West by

and is for greater clearness delineated on the plan hereto annexed and signed by the executing parties aforesaid.

Signed by
President
and
and
two Councillors of the Municipality of
and sealed with the common seal
of the Municipality of
in the presence of—

President.

Councillors.

1 _____

2 _____

Common Seal.

Signed, sealed and delivered by
Esquire, Director of Public Instruction for the State of Bombay, in the presence of—

1 _____

2 _____.

Annexture :—Plans.

FORM I-A.

Trust Deed to be executed by a District School Board under the Bombay Primary Education Rules, 1949.

(Building site not granted by Government.)

THIS INDENTURE made the day of one thousand nine hundred and between the District School Board of established under the Bombay Primary Education Act, 1947 (hereinafter referred to as "the School Board"), of the one part and the Governor of Bombay (hereinafter referred to as "the Government") of the other part WHEREAS the School Board is possessed of and absolutely entitled in perpetuity free from incumbrances to the piece of land described in the schedule hereto and intended to be hereby assured; AND WHEREAS the School Board applied to the Government for a Building Grant-in-aid of Rupees for a school-house to be known as the school and has satisfied the Director of Public Instruction, State of Bombay, that the building is intended for and will be devoted to educational purposes and in part to secular education that the plans, estimates and specifications are satisfactory that the title of the School Board to the piece of land described in the schedule hereto is good and in order and that the building constructed AND WHEREAS by the rules now in force in the State of Bombay for regulating the application of grants made by the Government in aid of schools it is provided (*inter alia*) that no portion of a Building Grant shall be paid to the managers of a school unless and until they execute or agree to execute a trust deed as in the said rules provided AND WHEREAS the Government has sanctioned a Building Grant of Rupees which sum has been duly paid and payment of which the School Board hereby acknowledges in consideration of the School Board executing to the Government such conveyance or assurance as is hereinafter contained which the School Board has agreed to do AND WHEREAS the Commissioner, Division, has sanctioned the transfer hereby made and such sanction is recorded in his Memorandum No. dated the day of 194 . NOW THIS INDENTURE WITNESSETH that in consideration of the premises and of the sum of Rupees paid as aforesaid by the Government to the School Board the School Board doth hereby grant, convey and assign unto the Government ALL THAT piece or parcel of land described in the schedule hereto, TOGETHER with all and singular the building and erections now being or which may hereafter be thereon expressly including the said building to be erected as

aforesaid and all rights, easements and appurtenances whatsoever usually held or occupied therewith or reputed to belong or be appurtenant thereto and also all fittings and fixtures being in and belonging to or used or to be used for the said School and all the estate right, title, interest, claim and demand of the School Board in and upon the said premises TO HOLD the said piece of land chattels and effects and all other premises expressed to be hereby assured unto and to the use of the Government according to the nature and tenure thereof respectively AND the School Board doth hereby for itself and its successors covenant that it has power to grant all the said premises to the Government in manner aforesaid free from incumbrances and that the School Board and every person claiming through or in trust for the School Board will at all times at the cost of the School Board execute and do all such assurances and things for the further or better assuring the said premises to the Government as aforesaid as shall be reasonably required AND it is hereby declared and agreed that the Government shall hold the said premises upon the trusts and to and for the intents and purposes following that is to say UPON TRUST to permit the School Board to enter upon the said premises for the purposes and on the conditions following namely that the School Board and its successors shall—

(1) construct within months from the date hereof buildings thereon according to the plans and specifications approved of or as may be approved of by the Director of Public Instruction, State of Bombay, for and on behalf of the Government;

(2) maintain and keep at all times in good and substantial repair and condition all the buildings now being or which may hereafter be on the said piece of land to the end that the same may be always efficient for use for the purposes of a school;

(3) pay all rates, charges, assessments and expenses leviable or chargeable in respect of the premises and buildings;

(4) use all the premises and buildings as and for the purposes of a public school to be devoted wholly to education and in part to secular education;

(5) manage and conduct the said school in all respects in accordance with the rules and regulations for the time being in force of the Educational Department of the Government of Bombay;

(6) keep the said school at all times open to the inspection of the inspecting officers of the Educational Department of the Government of Bombay; and

(7) keep at all times the building or buildings already erected or which may hereafter be erected on the said premises in respect of which a building grant has been given (except the building or buildings in respect of which the Executive Engineer of has issued a certificate that in his opinion the risk of fire is not sufficiently great as to render insurance desirable and so long as such certificate has not been cancelled by the Executive Engineer in writing) insured in the joint names of the School Board and the Government against loss or damage by fire in a sum equal to the cost of such building or buildings including flooring but exclusive of foundation and plinth at the least in some respectable insurance office to be approved by the Government or its Agent for the time being and regularly pay the premiums which shall become payable in respect of such insurance and whenever thereunto required so to do, produce to him the policy or policies of such insurance and the receipt for the premiums paid thereon in respect of the current year and shall, unless the School Board has forfeited its right or claim to such policy or policies of insurance as hereinafter provided, apply all moneys which may be received by virtue of any such policy or policies in rebuilding or reinstating the premises destroyed or damaged;

PROVIDED ALWAYS and it is hereby declared and agreed that in the event of default being made by the School Board in the performance of any of the conditions hereinbefore mentioned the Building Grant or so much of the same as shall not then have been made shall lapse and the aggregate amount of the said Building Grant and all future Building Grants from time to time advanced by the Government for the school shall be repayable to the Government AND for the purposes of recovering any moneys so due to the Government it shall be lawful for the Government to enter upon and take possession of the said premises and all buildings fixtures and fittings thereon and to sell and absolutely dispose of the same free from incumbrances and discharged from the trusts hereof in such manner as the Government in its absolute discretion shall see fit and apply the proceeds of such sale after payment thereout of all costs and expenses attending the same in or towards the recouping or reimbursing to the Government the moneys which may as aforesaid have become repayable or due to the Government and pay the surplus if any to the School Board or to such body or person whom the Government may consider lawfully entitled thereto and in any such event the School Board shall forfeit to the Government all its right or claim to, over or in respect of such policy or policies of insurance relating to the said buildings and the amount of premiums paid by it in respect of such insurance and the same shall then become absolutely the property of the Government. IN WITNESS WHEREOF Chairman of the School Board and two other Members of the School Board have hereunto set their hands and the common seal of the School Board hath been hereunto affixed and , Esquire, Director of Public Instruction for the State of Bombay, hath set his hand and the seal of his office hereto on behalf of the Governor of Bombay the day and year first above written.

THE SCHEDULE ABOVE REFERRED TO.

Description and boundaries of property.

The piece or parcel of land measures in superficial area square be the same a little more or less situated in the town/village of and bearing number in the taluka of in the district of and in the Registration sub-district of in the said district and measures from North to South feet on the eastern side and feet on the western side, and from East to West feet on the northern side and feet on the southern side, be the same a little more or less and is bounded as follows :—

on the North by

on the South by

on the East by

and on the West by

and is for greater clearness delineated on the plan hereto annexed and signed by the executing parties aforesaid.

Signed by

Chairman
and
and
two members of the School Board of
and sealed with the common seal of the School Board of
in the presence of

Chairman

Members.

Common Seal.

1. _____

2. _____

Signed, sealed and delivered by
, Esquire, Director of Public Instruction for the State of Bombay, in the presence of—

Official Seal.

1. _____

2. _____

Annexture :—Plan.

FORM I-B.

Trust-deed to be executed under the Bombay Primary Education Rules, 1949, by a Municipality constituted under the Bombay Municipal Boroughs Act, 1925 (Bombay XVIII of 1925).

(Building site not granted by Government.)

THIS INDENTURE made the day of one thousand nine hundred and between the Borough Municipality constituted under the Bombay Municipal Boroughs Act, 1925 (hereinafter referred to as " the Municipality ") of the one part and the Governor of Bombay (hereinafter referred to as " the Government ") of the other part. WHEREAS the Municipality is possessed of and absolutely entitled in perpetuity free from incumbrances to the piece of land described in the Schedule hereto and intended to be hereby assured; AND WHEREAS the Municipality applied to the Government for a Building Grant-in-aid of Rupees (Rs.) only for a school house to be known as the and has satisfied the Director of Public Instruction, State of Bombay, that the building is intended for and will be devoted to educational purposes and in part to secular education, that the plans estimates and specifications are satisfactory, that

the title of the Municipality to the piece of land described in the schedule hereto is good; and in order and that the building constructed

AND WHEREAS by the rules now in force in the State of Bombay for regulating the application of grants made by the Government in aid of schools it is provided (*inter alia*) that no portion of a Building Grant shall be paid to the Managers of a school unless and until they execute or agree to execute a trust deed as in the said rules provided; AND WHEREAS the Government has sanctioned a Building Grant of Rupees (Rs.) only which sum has been duly paid and payment of which the Municipality hereby acknowledges in consideration of the Municipality executing to the Government such conveyance or assurance as is hereinafter contained which the Municipality has agreed to do; AND WHEREAS the Commissioner, Division, has sanctioned the transfer hereby made and such sanction is recorded in his Memorandum No. dated the day of 194 . NOW THIS INDENTURE WITNESSETH that in consideration of the premises and of the sum of Rupees (Rs.) only paid as aforesaid by the Government to the Municipality the Municipality doth hereby grant, convey and assign unto the Government ALL THAT piece or parcel of land described in the schedule hereto TOGETHER with all and singular the building and erections now being or which may hereafter be thereon expressly including the said building to be erected as aforesaid and all rights, easements and appurtenances whatsoever usually held or occupied therewith or reputed to belong or be appurtenant thereto and also all fittings and fixtures being in and belonging to or used or to be used for the said school and all the estate, right, title, interest, claim and demand of the Municipality in and upon the said premises TO HOLD the said piece of land, chattels and effects and all other premises expressed to be hereby assured unto and to the use of the Government according to the nature and tenure thereof respectively; AND the Municipality doth hereby for itself and its successors covenant that it has power to grant all the said premises to the Government in the manner aforesaid free from incumbrances and that the Municipality and every person claiming through or in trust for the Municipality will at all times at the cost of the Municipality execute and do all such assurances and things for the further or better assuring the said premises to the Government as aforesaid as shall be reasonably required; AND it is hereby declared and agreed that the Government shall hold the said premises upon the trusts and to and for the intents and purposes following, that is to say UPON TRUST to permit the Municipality to enter upon the said premises for the purposes and on the conditions following, namely, that the Municipality and its successors shall—

(1) construct within months from the date hereof buildings thereon according to the plans and specifications approved or as may be approved by the Director of Public Instruction, State of Bombay, for and on behalf of the Government;

(2) maintain and keep at all times in good and substantial repair and condition all the buildings now being, or which may hereafter be, on the said piece of land to the end that the same may be always efficient for use for the purposes of a school;

(3) pay all rates, charges, assessments and expenses leviable or chargeable in respect of the premises and buildings;

(4) use all the premises and buildings as and for the purposes of a public school to be devoted wholly to education and in part to secular education;

(5) manage and conduct the said school in all respects in accordance with the rules and regulations for the time being in force of the Educational Department of the Government of Bombay;

(6) keep the said school at all times open to the inspection of the Inspecting Officers of the Educational Department of the Government of Bombay ; and

(7) keep at all times the building or buildings already erected or which may hereafter be erected on the said premises in respect of which a building grant has been given (except the building or buildings in respect of which the Executive Engineer of has issued a certificate that in his opinion the risk of fire is not sufficiently great as to render insurance desirable and so long as such certificate has not been cancelled by the Executive Engineer in writing) insured in the joint names of the Municipality and the Government against loss or damage by fire in a sum equal to the cost of such building or buildings including flooring but exclusive of foundation and plinth at the least in some respectable insurance office to be approved by the Government or its Agent for the time being and regularly pay the premiums which shall become payable in respect of such insurance and whenever thereunto required so to do, produce to him the policy or policies of such insurance and the receipt for the premiums paid thereon in respect of the current year and shall unless the Municipality has forfeited its right or claim to such policy or policies of insurance as hereinafter provided all moneys which may be received by virtue of any such policy or policies in rebuilding or reinstating the premises destroyed or damaged :

PROVIDED ALWAYS and it is hereby declared and agreed that in the event of default being made by the Municipality in the performance of any of the conditions hereinbefore mentioned the Building Grant or so much of the same as shall not then have been made shall lapse and the aggregate amount of the said Building Grant and all future Building Grants from time to time advanced by the Government for the school shall be repayable to the Government AND for the purposes of recovering any moneys so due to the Government it shall be lawful for the Government to enter upon and take possession of the said premises and all buildings, fixtures and fittings thereon and to sell and absolutely dispose of the same free from incumbrances and discharged from the trusts hereof in such manner as the Government in its absolute discretion shall see fit and apply the proceeds of such sale after payment thereout of all costs and expenses attending the same in or towards recouping or reimbursing to the Government the moneys which may as aforesaid have become repayable or due to the Government and pay the surplus, if any, to the Municipality or to such body or person whom the Government may consider lawfully entitled thereto and in any such event the Municipality shall forfeit to the Government all its rights or claim to, over or in respect of such policy or policies of insurance relating to the said buildings and the amount of premiums paid by it in respect of such insurance and the same shall then become absolutely the property of the Government. IN WITNESS WHEREOF

Chief Officer of the Municipality duly authorised in this behalf by a Resolution of the Municipality passed on the day of as required by clause (*c*) of sub-section (*3*) and clause (*a*) of sub-section (*4*) of section 48 of the Bombay Municipal Boroughs Act, 1925, has hereunto set his hand and the Common Seal of the Municipality hath been hereto affixed in the presence of two members of the Standing Committee as required by sub-section (*2*) of section 49 of the said Act and Director of Public Instruction, State of Bombay, hath set his hand and the seal of his office hereto on behalf of the Governor of Bombay, the day and year first above written.

THE SCHEDULE ABOVE REFERRED TO.

Description and boundaries of property.

The piece or parcel of land measures in superficial area square feet, be the same a little more or less, situated in the town of and bearing City Survey number in the taluka of in the district of and in the Registration sub-district of in the said district and measures from North to South feet on the eastern side and feet on the western side and from East to West feet on the northern side and feet on the southern side, be the same a little more or less, and is bounded as follows :—

on the North by
on the South by
on the East by
and on the West by

and is for greater clearness delineated on the plan hereto annexed and signed by the executing parties aforesaid.

Signed by

Chief Officer of the Borough Municipality in the presence of— Chief Officer.

1. ————————————————

2. ————————————————

and

sealed with the common seal of the Borough Municipality in the presence of—

1. ————————————————

2. ————————————————

Common Seal.

Members of the Standing Committee of the Borough Municipality.

Signed, sealed and delivered by

Director of Public Instruction, State of Bombay, in the presence of— } Director of Public Instruction.

1. ————————————————

2. ————————————————

Official Seal.

Annexure :—Plan.

FORM 1-C.

Trust Deed to be executed by a District School Board under the Bombay Primary Education Rules, 1949, in respect of a grant-in-aid paid to a non-authorised municipal school before its transfer to the District School Board under section 19 of the Bombay Primary Education Act, 1947.

(Building site not granted by Government.)

THIS INDENTURE made the day of one thousand nine hundred and between the District School Board of established under the Bombay Primary Education Act, 1947 (hereinafter referred to as "the School Board") of the one part and the Governor of Bombay (hereinafter referred to as "the Government") of the other part, whereas the Municipality of was possessed of and absolutely entitled in perpetuity free from incumbrances to the piece of land described in the schedule hereto, and intended to be hereby assured, and applied to the Government for a building grant-in-aid of Rupees for a school-house to be known as the and satisfied the Director of Public Instruction, State of Bombay, that the building was intended for and would be devoted to educational purposes and in part to secular education, and that the plans, estimates and specifications were satisfactory, that the title of the Municipality to the piece of land described in the schedule hereto was good and in order and that the building constructed AND WHEREAS by the rules now in force in the State of Bombay for regulating the application of grants made by the Government in aid of schools is provided (*inter alia*) that no portion of a building grant shall be paid to the Managers of a school unless and until they execute or agree to execute a trust deed as in the said rules provided AND WHEREAS the Government has sanctioned a building grant of Rupees which sum has been duly paid to the Municipality of (and the payment of which the School Board on behalf of the Municipality hereby acknowledges) in consideration of the Municipality executing to the Government such conveyance or assurance as is hereinafter contained, which the Municipality agreed to do.

And whereas the said Municipality being a non-Authorised Municipality under the Bombay Primary Education Act, 1947, has, in pursuance of Government Notification in the Educational Department No. dated the issued under section 19 of the said Act, transferred to the School Board all Primary schools with their lands, buildings, records and equipment, including the said piece of land, which vested in the said Municipality ; AND WHEREAS the School Board is now possessed of and absolutely entitled in perpetuity free from incumbrances to the said piece of land described in the schedule hereto and intended to be hereby assured AND WHEREAS the Commissioner, Division, has sanctioned the transfer hereby made and such sanction is recorded in his Memorandum No. dated the NOW THIS INDENTURE WITNESSETH that in consideration of the premises and of the sum of Rupees paid as aforesaid by the Government to the said Municipality the School Board doth hereby grant convey and assign unto the Government ALL THAT piece or parcel of land described in the schedule hereto TOGETHER

with all and singular the building and erections now being or which may hereafter be thereon expressly including the said building to be erected as aforesaid and all rights, easements and appurtenances whatsoever usually held or occupied therewith or reputed to belong or be appurtenant thereto and also all fittings and fixtures being in and belonging to or used or to be used for the said school and all the estate, right, title, interest, claim and demand of the School Board in and upon the said premises TO HOLD the said piece of land chattels and effects and all other premises expressed to be hereby assured unto and to the use of the Government according to the nature and tenure thereof respectively AND the School Board doth hereby for itself and its successors covenant that it has power to grant all the said premises to the Government in manner aforesaid free from incumbrances and that the School Board and every person claiming through or in trust for the School Board will at all times at the cost of the School Board execute and do all such assurances and things for the further or better assuring the said premises to the Government as aforesaid as shall be reasonably required AND it is hereby declared and agreed that the Government shall hold the said premises upon the trust and to and for the intents and purposes following, that is to say, UPON TRUST to permit the School Board to enter upon the said premises for the purposes and on the conditions following, namely, that the School Board and its successors shall—

(1) construct within months from the date hereof buildings thereon according to the plans and specifications approved of or as may be approved by the Director of Public Instruction, State of Bombay, for and on behalf of the Government ;

(2) maintain and keep at all times in good and substantial repair and condition all the buildings now being or which may hereafter be on the said piece of land to the end that the same may be always efficient for use for the purposes of a school ;

(3) pay all rates, charges, assessments and expenses leviable or chargeable in respect of the premises and buildings ;

(4) use all the premises and buildings as and for the purposes of a public school to be devoted wholly to education and in part to secular education ;

(5) manage and conduct the said school in all respects in accordance with the rules and regulations for the time being in force of the Educational Department of the Government of Bombay ;

(6) keep the said school at all times open to the inspection of the inspecting officers of the Educational Department of the Government of Bombay ; and

(7) keep at all times the building or buildings already erected or which may hereafter be erected on the said premises in respect of which a building grant has been given (except the building or buildings in respect of which the Executive Engineer of has issued a certificate that in his opinion the risk of fire is not sufficiently great as to render insurance desirable and so long as such certificate has not been cancelled by the Executive Engineer in writing) insured in the joint names of the School Board and the Government against loss or damage by fire in a sum equal to the cost of such building or buildings including flooring but exclusive of foundation and plinth at the least in some respectable insurance office to be approved by the Government or its Agent for the time being and regularly pay the premiums which shall become payable in respect of such insurance and whenever thereunto required

so to do, produce to him the policy or policies of such insurance and the receipt for the premiums paid thereon in respect of the current year and shall, unless the School Board has forfeited its right or claim to such policy or policies of insurance as hereinafter provided, apply all moneys which may be received by virtue of any such policy or policies in rebuilding or reinstating the premises destroyed or damaged :

PROVIDED ALWAYS and it is hereby declared and agreed that in the event of default being made by the School Board in the performance of any of the conditions hereinbefore mentioned the building grant or so much of the same as shall not then have been made shall lapse and the aggregate amount of the said building grant and all future building grants from time to time advanced by the Government for the school shall be repayable to the Government AND for the purposes of recovering any moneys so due to the Government it shall be lawful for the Government to enter upon and take possession of the said premises and all buildings, fixtures and fittings thereon and to sell and absolutely dispose of the same free from incumbrances and discharged from the trust hereof in such manner as the Government in its absolute discretion shall see fit and apply the proceeds of such sale after payment thereout of all costs and expenses attending the same in or towards the recouping or reimbursing to the Government the moneys which may as aforesaid have become repayable or due to the Government and pay the surplus if any to the School Board or to such body or person whom the Government may consider lawfully entitled thereto and in any such event the School Board shall forfeit to the Government all its right or claim to, over or in respect of such policy or policies of insurance relating to the said buildings and the amount of premiums paid by it in respect of such insurance and the same shall then become absolutely the property of the Government. IN WITNESS WHEREOF Chairman of the School Board and and two other Members of the School Board have hereunto set their hands and the common seal of the School Board hath been hereunto affixed and Esquire, Director of Public Instruction for the State of Bombay, hath set his hand and the seal of his office hereto on behalf of the Governor of Bombay the day and year first above written.

THE SCHEDULE ABOVE REFERRED TO.

Description and boundaries of property.

The piece or parcel of land measures in superficial area square feet, be the same a little more or less, situated in the town of and bearing numbers in the taluka of in the District of and in the registration sub-district of in the said district and measures from North to South feet on the the eastern side and feet on the western side, and from East to West feet on the northern side and feet on the southern side, be the same a little more or less, and is bounded as follows :—

on the North by

on the South by

on the East by

and on the West by

and is for greater clearness delineated on the plan hereto annexed and signed by the executing parties aforesaid.

Signed by
Chairman
and
and
two members of the School Board of and sealed with the common seal of the School Board of in the presence of—

Chairman.

Members.

Common Seal.

Signed, sealed and delivered by Esquire, Director of Public Instruction, State of Bombay, in the presence of—

Official Seal.

Annexure :—Plan.

FORM II.

*Trust Deed to be executed by a Municipality *under the Bombay Primary Education Rules, 1949.*

(Building site granted by Government.)

*Under the Bombay District Municipal Act, 1901.

THIS INDENTURE made the day of one thousand nine hundred and between the Municipality of constituted under the Bombay District Municipal Act, 1901 (hereinafter referred to as "the Municipality") of the one part, and the Governor of Bombay (hereinafter referred to as "the Government") of the other part, WHEREAS the Municipality has applied to Government for a Building Site for a school at and for a Building Grant-in-aid of such school and has satisfied the Director of Public Instructon, State of Bombay, that the building is intended for and will be devoted to educational purposes and in part to secular education that the plans, estimates and specifications are satisfactory and that the building constructed AND WHEREAS by the rules now in force in the State of Bombay for regulating the application of grants made by the Government in aid of

schools it is provided (*inter alia*) that no portion of a Building Grant shall be paid to the managers of a school unless and until they execute or agree to execute a trust deed as in the said rules provided AND WHEREAS the Government has agreed to allot the piece or parcel of land valued at Rupees described in the schedule hereto and to hold the same for the purposes of the said school in manner hereinafter appearing and has sanctioned a Building Grant of Rupees paid to the Municipality and the Municipality has agreed to execute these presents; AND WHEREAS the Commissioner, Division, has sanctioned the transfer hereby made and such sanction is recorded in his Memorandum No. dated the NOW IT IS HEREBY DECLARED AND AGREED by and between the parties hereto that the Government shall hold and stand posseoess of the piece of land described in the schedule hereto and all buildings which now are erected or may for the time being be erected thereon and also all fittings and fixtures which now are or may for the time being be on the premises upon the tursts and to and for the intents and purposes following that is to say UPON TRUST to permit the Municipality to enter upon the said premises for the purposes and on the conditions following, namely, that the Municipality and its successors shall—

(1) construct within months from the date hereof buildings thereon according to the plans and specifications approved of or as may be approved of by the Director of Public Instruction, State of Bombay, for and on behalf of the Government;

(2) maintain and keep at all times in good and substantial repair and condition all the buildings now being, or which may hereafter be on the said piece of land to the end that the same may be always efficient for use for the purposes of a school;

(3) pay all rates, charges, assessments and expenses leviable or chargeable in respect of the premises and buildings;

(4) use all the premises and buildings as and for the purposes of a public school to be devoted wholly to education and in part to secular education;

(5) manage and conduct the said school in all respects in accordance with the rules and regulations for the time being in force of the Educational Department of the Government of Bombay;

(6) keep the said school at all times open to inspection of the inspecting Officers of the Educational Department of the Government of Bombay; and

(7) keep at all times the building or buildings already erected or which may hereafter be erected on the said premises in respect of which a building grant has been given (except the building or buildings in respect of which the Executive Engineer of has issued a certificate that in his opinion the risk of fire is not sufficiently great as to render insurance desirable and so long as such certificate has not been cancelled by the Executive Engineer in writing) insured in the joint names of the Municipality and the Government against loss or damage by fire in a sum equal to the cost of such building or buildings including flooring but exclusive of foundation and plinth at the least in some respectable insurance office to be approved by the Government or its Agent for the time being

and regularly pay the premiums which shall become payable in respect of such insurance and whenever thereunto required so to do, produce to him the policy or policies of such insurance and the receipt for the premiums paid thereon in respect of the current year and shall, unless the Municipality has forfeited its right or claim to such policy or policies of insurance as hereinafter provided apply all moneys which may be received by virtue of any such policy or policies in rebuilding or reinstating the premises destroyed or damaged:

PROVIDED ALWAYS and it is hereby declared and agreed that in the event of default being made by the Municipality in the performance of any of the conditions hereinbefore mentioned in the said building grant and any future building grants from time to time made by the Government in respect of the said school or so much of the same as shall not then have been made shall lapse and it shall be lawful for the Government at any time thereafter to enter upon and take possession of the said premises and all buildings, fittings and fixtures for the time being on the said premises and the same shall be and become aboslutely the property of the Government free from incumbrances and discharged from the trusts hereof and from all claims (including the right or claim to, over or in respect of the policy or policies of insurance relating to the said buildings and the amount of premiums paid in respect of such insurance) of the Municipality, or its successors, representatives and assigns and all other persons whomsoever. IN WITNESS WHEREOF the President of the Municipality

and

and

two other Councillors of the Municipality have hereunto set their hands and the common seal of the Municipality hath been hereunto affixed and , Esquire, Director of Public Instruction for the State of Bombay, hath set his hand and the seal of the office hereto on behalf of the Governor of Bombay, the day and year first above written.

THE SCHEDULE ABOVE REFERRED TO.

Description and boundaries of property.

The piece or parcel of land measures in superficial area square be the same a little more or less situated in the town/village of and bearing number in the taluka of in the district of and in the Registration sub-district of in the said district and measures from North to South feet on the eastern side and feet on the western side, and from East to West feet on the northern side and feet on the southern side, be the same a little more or less and is bounded as follows :—

On the North by

On the South by

On the East by

and on the West by

and is for greater clearness delineated on the plan hereto attached and signed by the executing officers aforesaid.

Signed by

President

and

and

two Councillors of the Municipality of and sealed with the common seal of the Municipality of in the prsence of—

President.

Councillors.

1. _____

2. _____

Common Seal.

Signed, sealed and delivered by

Esquire, Director of Public Instruction for the State of Bombay, in the presence of—

1. _____

2. _____

Official Seal.

Annexure :—Plan.

FORM II-A.

Trust Deed to be executed by a District School Board under the Bombay Primary Education Rules, 1949.

(Building site granted by Government.)

THIS INDENTURE made the day of one thousand nine hundred and between the District School Board of established under the Bombay Primary Education Act, 1947 (hereinafter referred to as " the School Board ") of the one part, and the Governor of Bombay (hereinafter referred to as " the Government ") of the other part, WHEREAS the School Board has applied to the Government for a Building Site for a school at and for a building Grant-in-aid of such school and has satisfied the Director of Public Instruction, State of Bombay, that the building is intended for and will be devoted to educational purposes and in part to secular education that the plans, estimates and specifications are satisfactory and that the building constructed

AND WHEREAS by the rules now in force in the State of Bombay for regulating the application of grants made by the Government in aid of schools it is provided (*inter alia*) that no portion of a Building Grant shall be paid to the managers of a school unless and until they execute or agree to execute a trust deed as in the said rules provided AND WHEREAS the Government has agreed to allot the piece or parcel of land valued at Rupees
described in the Schedule hereto and to hold the same for the purposes of the said school in manner hereinafter appearing and has sanctioned a Building Grant of Rupees paid to School Board and the School Board has agreed to execute these presents, AND WHEREAS the Commissioner, Division, has sanctioned the transfer hereby made and such sanction is recorded in his Memorandum No. , dated the NOW IT IS HEREBY DECLARED AND AGREED by and between the parties hereto that the Government shall hold and stand possessed of the piece of land described in the schedule hereto and all buildings which now are erected or may for the time being be erected thereon and also all fittings and fixtures which now are or may for the time being be on the premises upon trusts and to and for the intents and purposes following that is to say UPON TRUST to permit the School Board to enter upon the said premises for the purposes and on the conditions following namely that the School Board and its successors shall—

(1) construct within months from the date hereof buildings thereon according to the plans and specifications approved of, or as may be approved of, by the Director of Public Instruction, State of Bombay, for and on behalf of the Government;

(2) maintain and keep at all times in good and substantial repair and condition all the buildings now being or which may hereafter be on the said piece of land to the end that the same may be always efficient for use for the purposes of a school;

(3) pay all rates, charges, assessments and expenses leviable or chargeable in respect of the premises and buildings;

(4) use all the premises and buildings as and for the purposes of a public school to be devoted wholly to education and in part to secular education;

(5) manage and conduct the said school in all respects in accordance with the rules and regulations for the time being in force of the Educational Department of the Government of Bombay;

(6) keep the said school at all times open to the inspection of the Inspecting Officers of the Educational Department of the Government of Bombay; and

(7) keep at all times the building or buildings already erected or which may hereafter be erected on the said premises in respect of which a building grant has been given (except the building or buildings in respect of which the Executive Engineer of
has issued a certificate that in his opinion the risk of fire is not sufficiently great as to render insurance desirable and so long as such certificate has not been cancelled by the Executive Engineer in writing) insured in the joint names of the School Board and the Government against loss or damage by fire in a sum equal to the cost of such building or buildings including flooring but exclusive

of foundation and plinth at the least in some respectable insurance office to be approved by the Government or its Agent for the time being and regularly pay the premiums which shall become payable in respect of such insurance and whenever thereunto required so to do, produce to him the policy or policies of such insurance and the receipt for the premiums paid thereon in respect of the current year and shall, unless the School Board has forfeited its right or claim to such policy or policies of insurance as hereinafter provided apply all moneys which may be received by virtue of any such policy or policies in rebuilding or reinstating the premises destroyed or damaged:

PROVIDED ALWAYS and it is hereby declared and agreed that in the event of default being made by the School Board in the performance of any of the conditions hereinbefore mentioned the said building grant and any future building grants from time to time made by the Government in respect of the said school or so much of the same as shall not then have been made shall lapse and it shall be lawful for the Government at any time thereafter to enter upon and take possession of the said premises and all buildings fittings and fixtures for the time being on the said premises and the same shall be and become absolutely the property of the Government free from incumbrances and discharged from the trusts hereof and from all claims (including the right or claim to, over or in respect of the policy or policies of insurance relating to the said buildings and the amount of premiums paid in respect of such insurance) of the School Board or its successors, representatives and assigns and all other persons whomsoever. IN WITNESS WHEREOF the Chairman of the School Board and and two other members of the School Board have hereunto set their hands and the common seal of the School Board hath been hereunto affixed and Esquire, Director of Public Instruction for the State of Bombay, hath set his hand and the seal of his office hereto on behalf of the Governor of Bombay, the day and year first above written.

THE SCHEDULE ABOVE REFERRED TO.

Description and boundaries of property.

The piece or parcel of land measures in superficial area square be the same a little more or less situated in the town/village of and bearing number in the taluka of in the district of and in the Registration sub-district of in the said district and measures from North to South feet on the eastern side and feet on the western side and from East to West feet on the northern side and feet on the southern side, be the same a little more or less and is bounded as follows :—

on the North by

on the South by

on the East by

and on the West by

and is for greater clearness delineated on the plan hereto annexed and signed by the executing parties aforesaid.

Signed by Chairman
and
and
two members of the School Board of
and sealed with the common seal
of the School Board of
in the presence of—

Chairman.

Members.

1. _____

2. _____

Common Seal.

Signed, sealed and delivered by
Esquire, Director of
Public Instruction for the State of
Bombay, in the presence of—

1. _____

2. _____

Official Seal.

Annexure :—Plan.

FORM II-B.

Trust Deed to be executed under the Bombay Primary Education Rules, 1949, by a Municipality constituted under the Bombay Municipal Boroughs Act, 1925 (Bombay XVIII of 1925).

(Building site granted by Government.)

THIS INDENTURE made the day of one thousand nine hundred and between the Borough Municipality of constituted under the Bombay Municipal Boroughs Act, 1925 (Bombay XVIII of 1925), (hereinafter referred to as " the Municipality") of the one part, and the Governor of Bombay (hereinafter referred to as " the Government ") of the other part, WHEREAS the Municipality has applied to the Government for a Building Site for a school at in the District to be known as and for a Building Grant-in-aid of such school and has satisfied the Director of Public Instruction, State of Bombay, that the building is intended for and will be devoted to educational purposes and in part to secular education that the plans, estimate and specifications are satisfactory and that the building constructed AND WHEREAS by the rules now in force in the State of Bombay for

regulating the application of grants made by the Government in aid of schools it is provided (*inter alia*) that no portion of a Building Grant shall be paid to the managers of a school unless and until they execute or agree to execute a trust deed as in the said rules provided AND WHEREAS the Government has agreed to allot the piece or parcel of land valued at Rupees
described in the schedule hereto and to hold the same for the purposes of the said school in manner hereinafter appearing and has sanctioned a Building Grant of Rupees which sum has been paid to the Municipality and the receipt of which the Municipality hereby acknowledges and the Municipality has agreed to execute these presents AND WHEREAS the Commissioner, Division, has sanctioned the transfer hereby made and such sanction is recorded in his Memorandum No. dated the . NOW IT IS HEREBY DECLARED AND AGREED by and between the parties hereto that the Government shall hold and stand possessed of the piece of land described in the schedule hereto and all buildings which now are erected or may for the time being be erected thereon and also all fittings and fixtures which now are or may for the time being be on the premises upon the trusts and to and for the intents and purposes following that is to say UPON TRUSTS to permit the Municipality to enter upon the said premises for the purposes and on the conditions following, namely, that the Municipality and its successors shall—

(1) construct within months from the date hereof buildings thereon according to the plans and specifications approved of, or as may be approved of, by the Director of Public Instruction, State of Bombay, for and on behalf of the Government;

(2) maintain and keep at all times in good and substantial repair and condition all the buildings now being, or which may hereafter be, on the said piece of land to the end that the same may be always efficient for use for the purposes of a school;

(3) pay all rates, charges, assessments and expenses leviable or chargeable in respect of the premises and buildings;

(4) use all the premises and buildings as and for the purposes of a public school to be devoted wholly to education and in part to secular education;

(5) manage and conduct the said school in all respects in accordance with the rules and regulations for the time being in force of the Educational Department of the Government of Bombay;

(6) keep the said school at all times open to inspection of the Inspecting Officers of the Educational Department of the Government of Bombay; and

(7) keep at all times the building or buildings already erected or which may hereafter be erected on the said premises in respect of which a building grant has been given (except the building or buildings in respect of which the Executive Engineer of has issued a certificate that in his opinion the risk of fire is not sufficiently great as to render insurance desirable and so long as such certificate has not been cancelled by the Executive Engineer in writing) insured in the joint names of the Municipality and the Government against loss or damage by fire in a sum equal to the cost of such building or buildings including flooring but exclusive of foundation and plinth at the least in some respectable insurance office to be approved by the Government or its Agent for the time being and regularly pay the premiums which shall become payable in respect of such insurance and whenever thereunto required so to do, produce to him the policy or policies of

such insurance and the receipt for the premiums paid thereon in respect of the current year and shall, unless the Municipality has forfeited its rights or claim to such policy or policies of insurance as hereinafter provided apply all moneys which may be received by virtue of any such policy or policies in rebuilding or reinstating the premises destroyed or damaged :

PROVIDED ALWAYS and it is hereby declared and agreed that in the event of default being made by the Municipality in the performance of any of the conditions hereinbefore mentioned the said building grant and any future building grants from time to time made by the Government in respect of the said school or so much of the same as shall not then have been made shall lapse and it shall be lawful for the Government at any time thereafter to enter upon and take possession of the said premises and all buildings fittings and fixtures for the time being on the said premises and the same shall be and become absolutely the property of the Government free from incumbrances and discharged from the trusts hereof and from all claims (including the right or claim to, over or in respect of the policy or policies of insurance relating to the said buildings and the amount of premiums paid in respect of such insurance) of the Municipality or its successors, representatives and assigns and all other persons whomsoever. IN WITNESS WHEREOF , Chief Officer of the Municipality duly authorised in this behalf by a resolution of the Municipality passed on the day of as required by clause (*c*) of sub-section (*3*) and clause (*a*) of sub-section (*4*) of section 48 of the Bombay Municipal Boroughs Act, 1925, hath hereunto set his hand and the common seal of the Municipality hath been hereunto affixed in the presence of two members of the Standing Committee as required by sub-section (*2*) of section 49 of the said Act, and , Esquire, Director of Public Instruction for the State of Bombay, hath set his hand and the seal of his office hereto on behalf of the Governor of Bombay, the day and year first above written.

THE SCHEDULE ABOVE REFERRED TO.

Description and boundaries of property.

The piece or parcel of land measures in superficial area square feet be the same a little more or less situated in the town of and bearing City Survey number in the taluka of in the district of and in the Registration sub-district of in the said district and measures from North to South feet on the eastern side and feet on the western side and from East to West feet on the northern side and feet on the southern side, be the same a little more or less and is bounded as follows :—

on the North by

on the South by

on the East by

and on the West by

and is for greater clearness delineated on the plan hereto annexed and signed by the executive officers aforesaid

Signed by
Esquire, Chief Officer of the
Borough Municipality of
in the presence of— } Chief Officer.

1. _____

2. _____

and sealed with the common seal of the Borough Municipality of in the presence of—

1. _____

2. _____

Common Seal.

Members of the Standing Committee of the Borough Municipality of

Signed, sealed and delivered by
Esquire, Director of
Public Instruction, State of Bombay,
in the presence of— } Director of Public Instruction.

1. _____

2. _____

Official Seal.

Annexture:—Plan.

FORM II-C.

Trust Deed to be executed by a District School Board under the Bombay Primary Education Rules, 1949, in respect of a grant-in-aid paid for a non-authorised Municipal school before its transfer to the District School Board under section 19 of the Bombay Primary Education Act, 1947.

(Building site granted by Government.)

THIS INDENTURE made the day of one thousand nine hundred and between the District School Board of established under the Bombay Primary Education Act, 1947 (hereinafter referred to as "the School Board") of the one part and the Governor of Bombay (hereinafter referred to as "the Government") of the other part, WHEREAS the Municipality of constituted under the Bombay Act, (hereinafter referred to as "the Municipality") has applied to the Government for a Building Site for a school at to be known as the and for a Building grant-in-aid of such school and satisfied the Director of Public Instruction, State

of Bombay, that the building was intended for and would be devoted to educational purposes and in part to secular education, that the plans, estimates and specifications were satisfactory, that the title of the Municipality to the piece of land described in the schedule hereto was good and in order and that the building constructed ; AND WHEREAS by the rules now in force in the State of Bombay for regulating the application of grants made by the Government in aid of schools it is provided (*inter alia*) that no portion of a building grant shall be paid to the managers of a school unless and until they execute or agree to execute a trust deed as in the said rules provided ; AND WHEREAS the Government had agreed to allot the piece or parcel of land valued at Rupees (Rs.) only described in the Schedule hereto to the Municipality to hold the same for the purposes of the said school in the manner hereinafter appearing and had sanctioned a building grant of Rupees (Rs.) only which sum was paid to the Municipality on day of 194 (and the payment of which the School Board on behalf of the Municipality hereby acknowledges) in consideration of the Municipality executing to the Government such conveyance or assurance as is hereinafter contained, which the Municipality agreed to do.

AND WHEREAS the Municipality being a non-Authorised Municipality under the Bombay Primary Education Act, 1947, has in pursuance of Government Notification in the Educational Department, No. dated the day of 194 , issued under section 19 of the said Act, transferred to the School Board all its Primary schools with their lands, buildings, records and equipment, including the said piece of land, which vested in the Municipality ; AND WHEREAS the School Board is now possessed of and absolutely entitled in perpetuity free from incumbrances to the said piece of land described in the schedule hereto and intended to be hereby assured :

AND WHEREAS the School Board has, in consideration of the building grant of Rupees (Rs.) only paid to the Municipality as aforesaid and in virtue of the transfer to itself of the Municipal schools as aforesaid, agreed to execute in favour of the Government such conveyance or assurance as is hereinafter contained ; AND WHEREAS the Commissioner, Division, has sanctioned the transfer hereby made and such sanction is recorded in his Memorandum No. dated the day of . Now THIS INDENTURE WITNESSETH that in consideration of the premises and of the sum of Rupees (Rs.) only paid as aforesaid by the Government to the Municipality, the School Board doth hereby grant, convey and assign unto the Government ALL THAT piece or parcel of land described in the schedule hereto TOGETHER with all and singular the building and erections now being or which may hereafter be thereon expressly including the said building to be erected as aforesaid and all rights, easements and appurtenances whatsoever usually held or occupied therewith or reputed to belong or be appurtenant thereto and also all fittings and fixtures being in and belonging to or used or to be used for the said school and all the estate, right, title, interest, claim and demand of the School Board in and upon the said premises TO HOLD the said piece of land, chattels and effects and all other premises exp essed to be hereby assured unto and to the use of the Government according to the nature and tenure thereof respectively ; AND the School Board doth hereby for itself and its successors covenant that it has power to grant all the said premises to the Government in the manner aforesaid free from incumbrances and that the School Board and every person claiming through or in trust for the School Board will at all

times at the cost of the School Board execute and do all such assurances and things for the further or better assuring the said premises to the Government as aforesaid as shall be reasonably required ; AND it is hereby declared and agreed that the Government shall hold the said premises upon the trusts and to and for the intents and purposes following, that is to say, UPON TRUST to permit the School Board to enter upon the said premises for the purposes and on the conditions following, namely that the School Board and its successors shall—

(1) construct within months from the date hereof buildings thereon according to the plans and specifications approved or as may be approved by the Director of Public Instruction, State of Bombay, for and on behalf of the Government;

(2) maintain and keep at all times in good and substantial repair and condition all the buildings now being or which may hereafter be on the said piece of land to the end that the same may be always efficient for use for the purposes of a school ;

(3) pay all rates, charges, assessments and expenses leviable or chargeable in respect of the premises and buildings ;

(4) use all the premises and buildings as and for the purposes of a public school to be devoted wholly to education and in part to secular education ;

(5) manage and conduct the said school in all respects in accordance with the rules and regulations for the time being in force of the Educational Department of the Government of Bombay ;

(6) keep the said school at all times open to the inspection of the Inspecting Officers of the Educational Department of the Government of Bombay ; and

(7) keep at all times the building or buildings already erected or which may hereafter be erected on the said premises in respect of which a building grant has been given (except the building or buildings in respect of which the Executive Engineer of has issued a certificate that in his opinion the risk of fire is not sufficiently great as to render insurance desirable and so long as such certificate has not been cancelled by the Executive Engineer in writing) insured in the joint names of the School Board and the Government against loss or damage by fire in a sum equal to the cost of such building or buildings including flooring but exclusive of foundation and plinth at the least in some respectable insurance office to be approved by the Government or its Agent for the time being and regularly pay the premiums which shall become payable in respect of such insurance and whenever thereunto required so to do, produce to him the policy or policies of such insurance and the receipt for the premiums paid thereon in respect of the current year, and shall, unless the School Board has forfeited its right or claim to such policy or policies of insurance as hereinafter provided, apply all moneys which may be received by virtue of any such policy or policies in rebuilding or reinstating the premises destroyed or damaged :

PROVIDED ALWAYS and it is hereby declared and agreed that in the event of default being made by the School Board in the performance of any of the conditions hereinbefore mentioned the Building Grant or so much of the same as shall not then have been made shall lapse and the aggregate amount of the said building Grant and all future Building Grants from time to time advanced by the Government for the school shall be repayable to the Government, AND for the purposes of recovering any moneys so due to the Government it shall be lawful for the Government to enter upon and take possession of the said premises and all buildings, fixtures and fittings thereon and to sell and absolutely dispose of the same free from incumbrances and discharged from the trusts hereof in such manner as the Government in its absolute

discretion shall see fit and apply the proceeds of such sale after payment thereout of all costs and expenses attending the same in or towards recouping or reimbursing to the Government the moneys which may as aforesaid have become repayable or due to the Government and pay the surplus, if any, to the School Board or to such body or person whom the Government may consider lawfully entitled thereto and in any such event the School Board shall forfeit to the Government all its right or claim to, over or in respect of such policy or policies of insurance relating to the said buildings and the amount of premiums paid by it in respect of such insurance and the same shall then become absolutely the property of the Government. IN WITNESS WHEREOF

Chairman of the School Board and

and , two other members of the School Board have hereunto set their hands and the common seal of the School Board hath been hereunto affixed and , Esquire, Director of Public Instruction, Province of Bombay, hath set his hand and the seal of his office hereto on behalf of the Governor of Bombay, the day and year first above written.

THE SCHEDULE ABOVE REFERRED TO.

Description and boundaries of property.

The piece or parcel of land measures in superficial area square feet, be the same a little more or less, situated in the town of and bearing survey No. in the taluka of in the district of and in the Registration Sub-District of in the said district and measures from North to South feet on the eastern side and feet on the western side and from East to West feet on the northern side and feet on the southern side be the same a little more or less and is bounded as follows :—

on the North by
on the South by
on the East by
and on the West by

and is for greater clearness delineated on the plan hereto annexed and signed by the executing parties aforesaid.

Signed by
Chairman.
and
and
two members of the
School Board of
and sealed with the common seal of the
School Board of
in the presence of

Chairman.

Members.

Common Seal

1. _____

2. _____

Signed, sealed and delivered by

Esquire,
Director of Public Instruction, State of Bombay, in the presence of

Director of Public Instruction.

1. _____

2. _____

Official Seal.

Annexture :—Plan.

FORM III.

Trust Deed to be executed by a Municipality under the Bombay Primary Education Rules, 1949.*

(Part of Building site granted by Government and part the property of a Municipality and transferred to the Government.)

*Under the Bombay District Municipal Act, 1901.

THIS INDENTURE made the day of one thousand nine hundred and between the Municipality of constituted under the Bombay District Municipal Act, 1901 (hereinafter referred to as " the Municipality ") of the one part, and the Governor of Bombay (hereinafter referred to as " the Government ") of the other part WHEREAS the Municipality is possessed of and absolutely entitled in perpetuity free from incumbrances to a piece of land described in the first schedule hereunder written and has applied to the Government for the adjoining piece of land described in the second schedule hereto so that the two pieces of land may be together used as a building site for a school at and has also applied to the Government for a building grant-in-aid of such school and has satisfied the Director of Public Instruction, State of Bombay, that the building is intended for and will be devoted to educational purposes and in part to secular education AND WHEREAS the plans, estimates and specifications for the school have been approved of by the Director of Public Instruction AND WHEREAS by the rules in force in the State of Bombay for regulating the application of grants made by the Government in aid of schools it is provided (*inter alia*) that no portion of a building grant shall be paid to the managers of a school unless and until they execute or agree to execute a trust deed as in the said rules provided AND WHEREAS the Government has sanctioned a building grant of Rupees in consideration of the Municipality executing this deed and conveying and assuring to the Government the piece of land described in the first schedule hereto and the Government has agreed to hold the whole of the two pieces of land described in the first and second schedules hereto (that described in the second schedule already belonging to the Government being valued at Rupees) for the purposes of the said school in manner hereinafter appearing AND WHEREAS the Commissioner, Division, has sanctioned the transfer thereby made and such sanction is recorded in his Memorandum No. dated the day of 19 . NOW THIS INDENTURE

WITNESSETH that in consideration of the premises and of the sum of Rupees paid to the Municipality (receipt whereof is hereby acknowledged) and of the declaration hereinafter contained the Municipality doth hereby grant, convey and assign unto the Government ALL THAT piece of land described in the first schedule hereto TOGETHER with all and singular the buildings and erections now being or which may hereafter be thereon or any part of the said land described in the schedules hereto or either of them and all rights easements and appurtenances usually held or occupied with the premises or reputed to belong or be appurtenant thereto and also all fittings and fixtures being in and belonging to or used or to be used in or in the said buildings and premises and all the estate, right, title, interest, claim and demand of the Municipality into and upon the said premises TO HOLD the same unto and to the use of the Government according to the nature or tenure thereof AND the Municipality doth hereby for itself and its successors covenant with the Government that it has power to grant the premises hereinbefore expressed to be hereby granted to the Government free from incumbrances AND that the Municipality and its successors and every person claiming any interest therein will at the cost of the Municipality execute and do all such acts and things for the further or better assuring the said premises to the Government as shall be reasonably required AND IT IS HEREBY DECLARED AND AGREED that the Government shall hold and stand possessed of the pieces of land described in the schedules hereto and all buildings which are now erected or may for the time being be erected thereon and also all fittings and fixtures which now are or may for the time being be on the said premises upon the trusts and to and for the intents and purposes following that is to say UPON TRUST to permit the Municipality to enter upon the said premises for the purposes and on the conditions following which conditions the Municipality for itself and its successors, covenants to perform and abide by, viz. that the Municipality and its successors shall—

(1) construct within months from the date hereof buildings thereon according to the plans and specifications approved of or as may be approved of by the Director of Public Instruction, State of Bombay, for and on behalf of the Government;

(2) maintain and keep at all times in good and substantial repair and condition all the buildings now being, or which may hereafter be on the said pieces of land to the end that the same may be always efficient for use for the purposes of a school;

(3) pay all rates, charges, assessments and expenses leviable or chargeable in respect of the premises and buildings;

(4) use all the premises and buildings as and for the purposes of a public school to be devoted wholly to education and in part to secular education;

(5) manage and conduct the said school in all respects in accordance with the rules and regulations for the time being in force of the Educational Department of the Government of Bombay;

keep the said school at all times open to the inspection of the Inspecting Officers of the Educational Department of the Government of Bombay; and

(7) keep at all times the building or buildings already erected or which may hereafter be erected on the said premises in respect of which a building grant has been given (except the building or buildings in respect of which the Executive Engineer of has issued a certificate that in his opinion the risk of fire is not sufficiently great as to render insurance desirable and so long as such certificate has not been cancelled by the Executive Engineer in writing) insured

in the joint names of the Municipality and the Government against loss or damage by fire in a sum equal to the cost of such building or buildings including flooring but exclusive of foundation and plinth at the least in some respectable insurance office to be approved by the Government or its Agent for the time being and regularly pay the premiums which shall become payable in respect of such insurance and whenever thereunto required so to do, produce to him the policy or policies of such insurance and the receipt for the premiums paid thereon in respect of the current year and shall, unless the Municipality has forfeited its right or claim to such policy or policies of insurance as hereinafter provided apply all moneys which may be received by virtue of any such policy or policies in rebuilding or reinstating the premises destroyed or damaged :

PROVIDED ALWAYS and it is hereby declared and agreed that in the event of default being made by the Municipality in the performance of any of the conditions hereinbefore mentioned the said building grant and any future building grants from time to time made by the Government in respect of the said school or so much of the same as shall not then have been made shall lapse and it shall be lawful for the Government at any time thereafter to enter upon and take possession of the said premises and all buildings, fittings and fixtures for the time being on the said premises and the same shall be and become absolutely the property of the Government free from incumbrances and discharged from the trusts hereof and from all claims (including the right or claim to, over or in respect of the policy or policies of insurance relating to the said buildings and the amount of premiums paid in respect of such insurance) of the Municipality, its successor, representatives and assigns and all other persons whomsoever. IN WITNESS WHEREOF
President and and as two other Councillors of the Municipality have hereunto set their hands and the common seal of the Municipality hath been hereunto affixed and
Esquire, Director of Public Instruction for the State of Bombay, hath set his hand and the seal of his office hereto on behalf of the Governor of Bombay, the day and year first above written.

THE SCHEDULE ABOVE REFERRED TO.

Schedule I.

The piece or parcel of land measures in superficial area square feet be the same a little more or less situated in the town/village of and bearing survey number in the Taluka of in the District of and in the Registration Sub-district of in the said district and measures from North to South feet on the eastern side and feet on the western side from East to West feet on the northern side and feet on the southern side be the same a little more or less and is bounded as follows :—

on the North by
on the South by
on the East by
and on the West by

and is for greater clearness delineated on the plan hereto annexed marked A and signed by the executing parties aforesaid.

Schedule II.

The piece or parcel of land measures in superficial area square feet be the same a little more or less situated in the town/village of and bearing survey number in the Taluka of in the district of and in the Registration Sub-district of in the said district and measures from North to South feet on the eastern side and feet on the western side and from East to West feet on the northern side and feet on the southern side, be the same a little more or less and is bounded as follows :—

on the North by

on the South by

on the East by

and on the West by

and is for greater clearness delineated on the plan hereto annexed marked B and signed by the executing parties aforesaid.

Signed by

President

and

and

two other Councillors of the Municipality of and sealed with the common seal of the Municipality of in the presence of—

President.

Councillors.

1. _____

2. _____

Common Seal.

Signed, sealed and delivered by the above-named Esquire, Director of Public Instruction, State of Bombay, in the presence of—

1. _____

2. _____

Official Seal.

Annexture :—Plan.

FORM III-A.

Trust Deed to be executed by a District School Board under the Bombay Primary Education Rules, 1949.

(Part of Building Site granted by Government and part the property of a District School Board and transferred to the Government.)

THIS INDENTURE made the day of one thousand nine hundred and between the District School Board of established under the Bombay Primary Education Act, 1947 (hereinafter referred to as "the School Board") of the one part and the Governor of Bombay (hereinafter referred to as "the Government") of the other part, WHEREAS the School Board is possessed of and absolutely entitled in perpetuity free from incumbrances to a piece of land described in the first schedule hereunder written and has applied to the Government for the adjoining piece of land described in the second schedule hereto so that the two pieces of land may be together used as a Building Site for a school at and has also applied to the Government for a Building Grant-in-aid of such school and has satisfied the Director of Public Instruction, State of Bombay, that the building is intended for and will be devoted to educational purposes and in part to secular education AND WHEREAS the plans and estimates and specifications for the school have been approved of by the Director of Public Instruction AND WHEREAS by the rules in force in the State of Bombay for regulating the application of grants made by the Government in aid of schools it is provided (*inter alia*) that no portion of a building grant shall be paid to the managers of a school unless and until they execute or agree to execute a trust deed as in the said rules provided AND WHEREAS the Government has sanctioned a Building Grant of Rupees in consideration of the School Board executing this deed and conveying and assuring to the Government the piece of land described in the first schedule hereto and the Government has agreed to hold the whole of the two pieces of land described in the first and second schedules hereto (that described in the second schedule already belonging to the Government valued at Rupees) for the purposes of the said school in manner hereinafter appearing AND WHEREAS the Commissioner, Division, has sanctioned the transfer hereby made and such sanction is recorded in his Memorandum No. dated the day of 194 . NOW THIS INDENTURE WITNESSETH that in consideration of the premises and of the sum of Rupees paid to the School Board (receipt whereof is hereby acknowledged) and of the declarations hereinafter contained the School Board doth hereby grant convey and assign unto the Government ALL THAT piece of land described in the first schedule hereto TOGETHER with all and singular the buildings and erections now being or which may hereafter be thereon or on any part of the said land described in the schedule hereto or either of them and all rights easements and appurtenances usually held or occupied with the premises or reputed to belong or be appurtenant thereto and also all fittings and fixtures being in and belonging to or used or to be used in or in the said buildings and premises and all the estate, right, title, interest, claim and demand of the School Board into and upon the said premises TO HOLD the same unto and to the use of the Government according to the nature or tenure thereof AND the School Board doth hereby for itself and its successors covenant with the Government that it has power to grant the premises hereinbefore expressed to be hereby granted to the Government free from incumbrances AND that the

School Board and its successors and every person claiming any interest therein will at the cost of the School Board execute and do all such acts and things for the further or better assuring the said premises to the Government his successors or assigns as shall be reasonably required AND IT IS HEREBY DECLARED AND AGREED that the Government shall hold and stand possessed of the pieces of land described in the schedules hereto and all buildings which are now erected or may for the time being be erected thereon and also all the fittings and fixtures which now are or may for the time being be on the said premises upon the trust and to and for the intents and purposes following that is to say UPON TRUST to permit the School Board to enter upon the said premises for the purposes and on the conditions following which conditions the School Board for itself and its successors covenants to perform and abide by, namely that the School Board and its successors shall—

(1) construct within months from the date hereof buildings thereon according to the plans and specifications approved of or as may be approved of by the Director of Public Instruction, State of Bombay, for and on behalf of the Government ;

(2) maintain and keep at all times in good and substantial repair and condition all the buildings now being or which may hereafter be on the said pieces of land to the end that the same may be always efficient for use for the purposes of a school ;

(3) pay all rates, charges, assessments and expenses leviable or chargeable in respect of the premises and buildings ;

(4) use all the premises and buildings as and for the purposes of a public school to be devoted wholly to education and in part to secular education ;

(5) manage and conduct the said school in all respects in accordance with the rules and regulations for the time being in force of the Educational Department of the Government of Bombay ;

(6) keep the said school at all times open to the inspection of the Inspecting Officers of the Educational Department of the Government of Bombay ; and

(7) keep at all times the building or buildings already erected or which may hereafter be erected on the said premises in respect of which a building grant has been given (except the building or buildings in respect of which the Executive Engineer has issued a certificate that in his opinion the risk of fire is not sufficiently great as to render insurance desirable and so long as such certificate has not been cancelled by the Executive Engineer in writing) insured in the joint names of the School Board and the Government against loss or damage by fire in a sum equal to the cost of such building or buildings including flooring but exclusive of foundation and plinth at the least in some respectable insurance office to be approved by the Government or its Agent for the time being and regularly pay the premiums which shall become payable in respect of such insurance and whenever thereunto required so to do, produce to him the policy or policies of such insurance and the receipt for the premiums paid thereon in respect of the current year and shall, unless the School Board has forfeited its right or claim to such policy or policies of insurance as hereinafter provided apply all moneys which may be received by virtue of any such policy or policies in rebuilding or reinstating the premises destroyed or damaged :

PROVIDED ALWAYS and it is hereby declared and agreed that in the event of default being made by the School Board in the performance of any of the conditions hereinbefore mentioned the said building grant and any future building grants from time to time made by the Government in respect of the said school or so much of the same as shall not then have been made shall lapse and it shall be lawful

for the Government at any time thereafter to enter upon and take possession of the said premises and all buildings fittings and fixtures for the time being on the said premises and the same shall be and become absolutely the property of the Government free from incumbrances and discharged from the trusts hereof and from all claims (including the right or claim to, over or in respect of the policy or policies of insurance relating to the said buildings and the amount of premiums paid in respect of such insurance) of the School Board, its successors, representatives and assigns and all other persons whomsoever. IN WITNESS WHEREOF

Chairman and and as two other Members of the School Board have hereunto set their hands and the common seal of the School Board hath been hereunto affixed and

, Esquire, Director of Public Instruction, State of Bombay, hath set his hand and the seal of his office hereto on behalf of the Governor of Bombay, the day and your first above written.

THE SCHEDULES ABOVE REFERRED TO.

Schedule I.

The piece or parcel of land measures in superficial area square be the same a little more or less situated in the $\frac{\text{town}}{\text{village}}$ of and bearing number in the taluka of in the district of and in the Registration sub-district of in the said district and measures from North to South feet on the eastern side and feet on the western side and from East to West feet on the northern side and feet on the southern side, be the same a little more or less and is bounded as follows :—

on the North by
on the South by
on the East by
and on the West by

Schedule II.

The piece or parcel of land measures in superficial area square be the same a little more or less situated in the town/village of and bearing number in the taluka of in the district of and in the Registration sub-districts of in the said district and measures from North to South feet on the eastern side and feet on the western side and from East to West feet on the northern side and feet on the southern side be the same a little more or less and is bounded as follows :—

on the North by
on the South by
on the East by
and on the West by

and is for greater clearness delineated on the plan hereto annexed and signed by the executing parties aforesaid.

Signed by

Chairman and — Chairman.

and

two other Members of the School Board of and sealed with the common seal of the School Board of

in the presence of— — Members

1. _____

2. _____

Common Seal.

Signed, sealed and delivered by Esquire, Director of Public Instruction, State of Bombay, in the presence of—

1. _____

2. _____

Official Seal.

Annexture :—Plan.

FORM III-B.

Trust deed to be executed under the Bombay Primary Education Rules, 1949, by a Municipality constituted under the Bombay Municipal Boroughs Act, 1925.

(Part of building site granted by Government and part the property of a Municipality and transferred to the Government.)

THIS INDENTURE made the day of one thousand nine hundred and between the Borough Municipality constituted under the Bombay Municipal Boroughs Act, 1925 (hereinafter referred to as "the Municipality") of the one part of and the Governor of Bombay (hereinafter referred to as "the Government") of the other part WHEREAS the Municipality is possessed of and absolutely entitled in perpetuity free from incumbrances to a piece of land described in the first schedule hereunder written and has applied to the Government for the adjoining piece of land described in the second schedule hereto so that the two pieces of land may be together used as a building site for a school at and has also applied to the Government for a building grant-in-aid of such school and has satisfied

the Director of Public Instruction, State of Bombay, that the building is intended for and will be devoted to educational purposes and in part to secular education AND WHEREAS the plans, estimates and specifications for the school have been approved of by the Director of Public Instruction AND WHEREAS by the rules in force in the State of Bombay for regulating the application of grants made by the Government in aid of schools it is provided (*inter alia*) that no portion of a building grant shall be paid to the managers of a school unless and until they execute or agree to execute a trust deed as in the said rules provided AND WHEREAS the Government has sanctioned a building grant of Rupees (Rs.) only in consideration of the Municipality executing this deed and conveying and assuring to the Government the pieces of land described in the first and second schedules hereto and the Government has agreed to hold both the pieces of land [that described in the second schedule already belonging to the Government being valued at Rupees (Rs.) only] for the purposes of the said school in the manner hereinafter appearing AND WHEREAS the Commissioner, Division, has sanctioned the transfer hereby made and such sanction is recorded in his Memorandum No. dated the day of 19 . Now THIS INDENTURE WITNESSETH that in consideration of the premises and of the sum of Rupees (Rs.) only paid to the Municipality (receipt whereof is hereby acknowledged) and of the declaration hereinafter contained the Municipality doth hereby grant, convey and assign unto the Government ALL THAT piece or parcel of land described in the first and second schedules hereto TOGETHER with all and singular the buildings and erections now being or which may hereafter be thereon or any part of the said lands or either of them and all rghts, easements and appurtenances usually held or occupied with the premises or reputed to belong or be appurtenant thereto and also all fittings and fixtures being in and belonging to or used or to be used in or in the said buildings and premises and all the estate, right, title, interest, claim and demand of the Municipality into and upon the said premises to HOLD the same unto and to the use of the Government according to the nature or tenure hereof; AND the Municipality doth hereby for itself and it successors covenant with the Government that it has power to grant the premises hereinbefore expressed to be hereby granted to the Government free from incumbrances AND that the Municipality and its successors and every person claiming any interest therein will at the cost of the Municipality execute and do all such acts and things for the further or better assuring the said premises to the Government as shall be reasonably required AND IT IS HEREBY DECLARED AND AGREED that the Government shall hold and stand possessed of the pieces of land described in the schedules hereto and all buildings which are now erected or may for the time being be erected thereon and also all fittings and fixture which now are or may for the time being be on the said premises upon the trusts and to and for the intents and purposes following that is to say UPON TRUST to permit the Municipality to enter upon the said premises for the purposes and on the conditions following which condition the Municiplity for itself and its successors convenants to perform and abide by, viz., that the Municipality and its successors shall—

(1) construct within months from the date hereof buildings thereon according to the plans and specifications approved of or as may be approved by the Director of Public Instruction, State of Bombay, for and on behalf of the Government;

(2) maintain and keep at all times in good and substantial repair and condition all the buildings now being or which may hereafter be on the said pieces of land to the end that the same may be always efficient for use of the purpose of a school:

(3) pay all rates, charges, assessments and expenses leviable or chargeable in respect of the premises and buildings;

(4) use all the premises and buildings as and for the purposes of a public school to be devoted wholly to education and in part to secular education;

(5) manage and conduct the said school in all respects in accordance with the rules and regulations for the time being in force of the Educational Department of the Government of Bombay;

(6) keep the said school at all times open to the inspections of the Inspecting Officers of the Educational Department of the Government of Bombay; and

(7) keep at all times the building or buildings already erected or which may hereafter be erected on the said premises in respect of which a building grant has been given (except the building or buildings in respect of which the Executive Engineer of has issued a certificate that in his opinion the risk of fire is not sufficiently great as to render insurance desirable and so long as such certificate has not been cancelled by the Executive Engineer in writing) insured in the joint names of the Municipality and the Government against loss or damage by fire in a sum equal to the cost of such building or buildings including flooring but exclusive of foundation and plinth at the least in some respectable insurance office to be approved by the Government or its Agent for the time being and regularly pay the premiums which shall become payable in respect of such insurance and whenever thereunto required so to do, produce to him the policy or policies of such insurance and the receipt for the premiums paid thereon in respect of the current year and shall, unless the Municipality has forfeited its right or claim to such policy or policies of insurance as hereinafter provided apply all moneys which may be received by virtue of any such policy or policies in rebuilding or reinstating the premises destroyed or damaged:

PROVIDED ALWAYS and it is hereby declared and agreed that in the event of default being made by the Muncipality in the performance of any of the conditions hereinbefore mentioned the said building grant and any future buildings grants from time to time made by the Government in respect of the said school or so much of the same as shall not then have been made shall lapse and it shall be lawful for the Government at any time thereafter to enter upon and take possession of the said premises and all buildings, fittings and fixtures for the time being on the said premises and the same shall be and become absolutely the property of the Government free from incumbrances and discharged from the trusts hereof and from all claims (including the right of claim to, over or in respect of, the policy or policies of insurance relating to the said building and the amount of premiums paid in respect of such insurance) of the Municipality, its successors, representatives and assigns and all other persons whomsoever. IN WITNESS WHEREOF -
Chief Officer of the Municipality duly authorised in this behalf by a Resolution of the Municipality passed on the day of as required by clause (*c*) of sub-section (*3*) and clause (*a*) of sub-section (*4*) of section 48 of the Bombay Municipal Booughs Act, 1925, has hereunto set his hand and the common seal of the Municipality hath been hereto affixed in the presence of two members of the Standing Committee as required by sub-section (*2*) of section 49 of the said Act and , Esquire, Director of Public Instruction, State of Bombay, hath set his hand and the seal of his office hereto on behalf of the Governor of Bombay the day and year first above written.

THE SCHEDULES ABOVE REFERRED TO.

SCHEDULE I.

Description and boundaries of property.

The piece or parcel of land measures in superficial area square feet, be the same a little more or less, situated in the town of and bearing City Survey number in the taluka of in the district of and in the Registraion Sub-District of in the said district and measures from North to South feet on the eastern side and feet on the western side, and from East to West feet on the northern side and feet on the southern side, be the same a little more or less, and is bounded as follows :—

on the North by
on the South by
on the East by
and on the West by

and is for greater clearness delineated on the plan hereto annexed marked A and signed by the executing parties aforesaid.

SCHEDULE II.

Description and boundaries of property.

The piece or parcel of land measures in superficial area square feet, be the same a little more or less, situated in the town of and bearing City Survey number in the taluka of in the district of and in the Registration Sub-district in the said district and measures from North to South feet on the eastern side and feet on the western side and from East to West feet on the northern side and feet on the southern side, be the same a little more or less, and is bounded as follows :—

on the North by
on the South by
on the East by
and on the West by

and is for greater clearness delineated on the plan hereto annexed marked B and signed by executing parties aforesaid.

Signed by
Esquire, Chief Officer of the
Borough Municipality in the presence
of— } Chief Officer,

1. _____

2. _____

Sealed with the common seal of the Borough Municipality in the presence of—

1. _____

2. _____

Common Seal.

Members of the Standing Committee of the Borough Municipality.

Members.

Signed, sealed and delivered by Esquire, Director of Public Instruction, State of Bombay, in the presence of—

Director of Public Instruction.

1. _____

2. _____

Official Seal.

Annexture :—A and B Plans.

FORM III-C.

Trust deed to be executed by a District School Board under the Bombay Primary Education Rules, 1949, in respect of grant-in-aid paid for a non-Authorised Municipal School before its transfer to the District School Board under section 19 of the Bombay Primary Education Act, 1947.

(Part of building site granted by Government and part the property of a non-Authorised Municipality and transferred to the Government.)

THIS INDENTURE made the day of one thousand nine hundred and between the District School Board of established under the Bombay Primary Education Act, 1947 (hereinafter referred to as "the School Board") of the one part and the Governor of Bombay (hereinafter referred to as "the Government") of the other part WHEREAS the Municipality of constituted under the Bombay Act (hereinafter referred to as "the Municipality") was possessed of and absolutely entitled in perpetuity free from incumbrances to a piece of land described in the first schedule hereunder written and had applied to the Government for the adjoining piece of land described in the second schedule hereto so that the two pieces of land might be together used as a building site for a school at and also applied to the Government for a building grant-in-aid of such school and satisfied the Director of Public Intsruction, State of Bombay, that the building was intended for and wou'd be devoted to educational purposes and in part to secular education, that the plans, estimates and specifications were satisfactory, that the title of the Municipality to the pieces of land described in the schedules hereto was good and in order and that the building constructed; AND WHEREAS by the rules

now in force in the State of Bombay for regulating the application of grants made by the Government in aid of schools it is provided (*inter alia*) that no portion of a building grant shall be paid to the managers of a school unless and until they execute or agree to execute a trust deed as in the said rules provided; AND WHEREAS the Government had sanctioned a Building Grant of Rupees (Rs.) only which sum has been duly paid to the Municipality on the day of 194 (and the payment of which School Board on behalf of the Municipality hereby acknowledges) in consideration of the Municipality executing to the Government such conveyance or assurance as is hereinafter contained, which the Municipality agreed to do and the Government agreed to hold the whole of the two pieces of land described in the first and second schedules hereto (that described in the second schedule already belonging to the Government being valued at Rupees (Rs.) only for the purposes of said school in manner hereinafter appearing.

AND WHEREAS the Municipality being a Non-authorised Municipality under the Bombay Primary Education Act, 1947, has in pursuance of Government Notification in the Educational Department, No. , dated the issued under section 19 of the said Act, transferred to the School Board all its Primary schools with their lands, buildings, records and equipment, including the said pieces of land, which vested in the Municipality; AND WHEREAS the School Board is now possessed of and absolutely entitled in perpetuity free from incumbrances to the said pieces of land described in the schedules hereto and intended to be hereby assured; AND WHEREAS the School Board has, in consideration of the building grant of Rupees (Rs.) only paid to the Municipality as aforesaid and in virtue of the transfer to itself of the Municipal schools as aforesaid agreed to execute in favour of the Government such conveyance or assurance as is hereinafter contained; AND WHEREAS the Commissioner, Division, has sanctioned the transfer hereby made and such sanction is recorded in his Memorandum No. dated the day of 19 . NOW THIS INDENTURE WITNESSETH that in consideration of the premises and of the sum of Rupees (Rs.) only paid as aforesaid by the Government to the said Municipality, the School Board doth hereby grant, convey and assign unto the Government ALL THAT piece or parcel of land described in the schedules hereto TOGETHER with all and singular the buildings and erections now being or which may hereafter be thereon expressly including the said building to be erected as aforesaid and all rights, easements and appurtenances whatsoever usually held or occupied therewith or reputed to belong or be appurtenant thereto and also all fittings and fixtures being in and belonging to or used or to be used for the said school and all the estate, right, title, interest, claim and demand of the School Board in and upon the said premises TO HOLD the said pieces of land, chattels and effects and all other premises expressed to be hereby assured unto and to the use of the Government according to the nature and tenure thereof respectively; AND the School Board doth hereby for itself and its successors covenant that it has power to grant all the said premises to the Government in manner aforesaid free from incumbrances and that the School Board and every person claiming through or in trust for the School Board will at all times at the cost of the School Board execute and do all such assurances and things for the further or better assuring the said premises to the Government as aforesaid as shall be reasonably required; AND it is hereby declared and agreed that the Government shall hold the said premises upon the trust and to and for the intents and purposes following, that is to say, UPON TRUST to

permit the School Board to enter upon the said premises for the purposes and on the conditions following, namely, that the School Board and its successors shall—

(1) construct within months from the date hereof buildings thereon according to the plans and specifications approved or as may be approved by the Director of Public Instruction, State of Bombay, for and on behalf of the Government;

(2) maintain and keep at all times in good and substantial repair and condition all the buildings now being or which may hereafter be on the said pieces of land to the end that the same may be always efficient for use for the purposes of a school;

(3) pay all rates, charges, assessments and expenses leviable or chargeable in respect of the premises and buildings;

(4) use all the premises and buildings as and for the purposes of a public school to be devoted wholly to education and in part to secular education;

(5) manage and conduct the said school in all respects in accordance with the rules and regulations for the time being in force of the Educational Department of the Government of Bombay;

(6) keep the said school at all times open to the inspection of the Inspecting Officers of the Educational Department of the Government of Bombay; and

(7) keep at all times the building or buildings already erected or which may hereafter be erected on the said premises in respect of which a building grant has been given (except the building or buildings in respect of which the Executive Engineer of has issued a certificate that in his opinion the risk of fire is not sufficiently great as to render insurance desirable and so long as such certificate has not been cancelled by the Executive Engineer in writing) insured in the joint names of the School Board and the Government against loss or damage by fire in a sum equal to the cost of such building or buildings including flooring but exclusive of foundation and plinth at the least in some respectable insurance office to be approved by the Government or its Agent for the time being and regularly pay the premiums which shall become payable in respect of such insurance and whenever thereunto required so to do, produce to him the policy or policies of such insurance and the receipt for the premiums paid thereon in respect of the current year and shall, unless the School Board has forfeited its right or claim to such policy or policies of insurance as hereinafter provided, apply all moneys which may be received by virtue of any such policy or policies in rebuilding or reinstating the premises destroyed or damaged:

PROVIDED ALWAYS and it is hereby declared and agreed that in the event of default being made by the School Board in the performance of any of the conditions hereinbefore mentioned the Building Grant or so much of the same as shall not then have been made shall lapse and the aggregate amount of th said Building Grant and all future Building Grants from time to time advanced by the Government for the school shall be repayable to the Government, AND for the purposes of recovering any moneys so due to the Government it shall be lawful for the Government to enter upon and take possession of the said premises and all buildings, fixtures and fittings thereon and to sell and absolutely dispose of the same free from incumbrances and discharged from the trusts hereof in such manner as the Government in its absolute discretion shall see fit and apply the proceeds of such sale after payment thereout of all costs and expenses attending the same in or towards the recouping or reimbursing to the Government the moneys which may as aforesaid have become

repayable or due to the Government and pay the surplus, if any, to the School Board or to such body or person whom the Government may consider lawfully entitled thereto and in any such event the School Board shall forfeit to the Government all its right or claim to, over or in respect of such policy or policies of insurance relating to the said buildings and the amount of premiums paid by it in respect of such insurance and the same shall then become absolutely the property of the Government. IN WITNESS WHEREOF

the Chairman of the School Board and and two other members of the School Board have hereunto set their hands and the common seal of the School Board hath been hereunto affixed and

Esquire, Director of Public Instruction, State of Bombay, hath set his hand and the seal o his office hereto on behalf of the Governor of Bombay, the day and year first above written.

THE SCHEDULES ABOVE REFERRED TO.

SCHEDULE I.

Description and boundaries of property.

The piece or parcel of land measures in superficial area square feet, be the same a little more or less, situated in the town/village of and bearing survey number in the Taluka of in the District of and in the Registration sub-district of in the said district and measures from North to South feet on the eastern side and feet on the western side and from East to West feet on the northern side and feet on the southern side, be the same a little more or less, and is bounded as follows :—

on the North by
on the South by
on the East by
and on the West by

and is for greater clearness delincated on the plan heret o annexed marked A and signed by the executing parties aforesaid.

SCHEDULE II.

Description and boundaries of property.

The piece or parcel of land measures in superficial area square feet, by the same a litt e more or less, situated in the town/village of and bearing survey number in the taluka of in the district of and in the Registration sub-district of in the said district and measures from North to South feet on the eastern side and feet on the western side, and from East to West feet on the northern side and feet on the southern side, by the same a little more or less, and is bounded as follows :—

on the North by
on the South by
on the East by
and on the West by

and is for greater clearness delineated on the plan hereto annexed marked B and signed by the executing parties aforesaid.

Signed by
Chairman
and
and
two Members of the School Board
of and sealed with the commonseal
of the School Board of
in the presence of—

Chairman.

Common Seal.

Members.

1. _____

2. _____

Signed, sealed and delivered by
Esquire, Director of
Public Instruction, State of Bombay,
in the presence of—

Director of Public Instruction.

1. _____

2. _____

Official Seal.

Annextures :—A and B plans.

FORM IV.

Trust Deed to be executed by a Municipality under the Bombay Primary Education Rules, 1949.*

(Building site acquired by a Municipality from a private person on condition that it should revert to him in the event of the site ceasing to be used for a school or any other condition which precludes a transfer to the Government.)

THIS INDENTURE made the day of one thousand nine hundred and between the Municipality of constituted under the Bombay District Municipal Act, 1901 (hereinafter referred to as "the Municipality") of the one part and the Governor of Bombay (hereinafter referred to as "the Government" of the other part WHEREAS the Municipality is possessed of the piece of land described in the schedule hereto and has applied to the Government for a Building Grant-in-aid of and have satisfied the Director of Public Instruction, State of Bombay, that the Building is intended for and will be devoted to educational purposes and in part to secular education that the plans, estimates and specifications are satisfactory that the Municipality are possessed

* Under the Bombay District Municipal Act, 1901.

of the said piece of land and that the Building will be within months from . AND WHEREAS by the rules now in force in the State of Bombay for regulating the application of grants made by the Government in aid of schools it is provided (*inter alia*) that no portion of a Building Grant shall be paid to the Managers of a school unless and until they execute or agree to execute a deed or agreement as in the said rules provided AND WHEREAS the Government sanctioned a Building Grant of Rupees in consideration of the Municipality entering into the covenants hereinafter contained NOW THIS INDENTURE WITNESSETH that in consideration of the sum of Rupees paid by the Government to the Municipality the Municipality doth hereby for itself and its successors covenants with the Government that the Municipality and its successors or other the Managers for the time being of the school carried on in the buildings erected or to be erected on the premises described in the schedule hereto shall—

(1) construct within months from the date hereof buildings thereon according to the plans and specifications approved or as may be approved by the Director of Public Instruction, State of Bombay, for and on behalf of the Government;

(2) maintain and keep at all times in good and substantial repair and condition all the buildings now being or which may hereafter be on the said piece of land to the end that the same may be always efficient for use for the purposes of a school;

(3) pay all the rates, charges, assessments and expenses leviable or chargeable in respect of the premises and buildings;

(4) use all the premises and buildings as and for the purposes of a public school to be devoted wholly to education and in part to secular education;

(5) manage and conduct the said school in all respects in accordance with the rules and regulations for the time being in force of the Educational Department of the Government of Bombay; and

(6) keep the said school at all times open to the inspection of the Inspecting Officers of the Educational Department of the Government of Bombay.

AND in the event of default being made by the Municipality or its successors or by the managers for the time being of the said school in the performance of any of the covenants or conditions numbered (1) to (6) hereinbefore mentioned or in the event of the Municipality being found at any time by a Civil Court or by the Collector after formal inquiry under sub-section (2) of section 37 of the Bombay Land Revenue Code, 1879 (Bom. V of 1879), to be not in lawful possession of the site on which the school has been constructed the Municipality or its successors no will demand by or on behalf of the Government pay to the Government the amount of the said grant-in-aid of Rupees together with the amount or amounts of all further building grants-in aid (if any) made by the Government for or in respect of the said school but without interest prior to the date of such demand. IN WITNESS WHEREOF

President and and

as two other Councillors of the Municipality have hereunto set their hands and the common seal of the Municipality hath been hereunto affixed, the day and year first above written.

THE SCHEDULE ABOVE REFERRED TO.

Description and boundaries of property.

The piece or parcel of land measures in superficial area square feet be the same a little more or less, situated in the town/village of and bearing number in the taluka of in the district of and in the Registration Sub-district of in the said district and measures from North to South feet on the eastern side and feet on the western side and from East to West feet on the northern side and feet on the southern side, be the same a little more or less and is bounded as follows :—

on the North by
on the South by
on the East by
and on the West by

Signed by President
and
and
two Councillors of the Municipality of
and sealed with the common seal of the Municipality of in the presence of—

President.

Councillors.

1. _____

2. _____

Common Seal.

Annexture :—Plan.

FORM IV-A.

Trust deed to be executed by a District School Board under the Bombay Primary Education Rules, 1949.

(Building site acquired by a District School Board from a private person on condition that it should revert to him in the event of the site ceasing to be used for a school or any other condition which precludes transfer to the Government.)

THIS INDENTURE made the day of one thousand nine hundred and between the District School Board of established under the Bombay Primary Education Act, 1947 (hereinafter referred to as " the School Board "), of the one part and the Governor of Bombay (hereinafter referred to as " the Government ") of the other part,

WHEREAS the School Board is possessed of the piece of land described in the schedule hereto and has applied to the Government for a building grant-in-aid of and have satisfied the Director of Public Instruction, State of Bombay, that the building is intended for and will be devoted to educational purposes and in part to secular education that the plans, estimates and specifications are satisfactory that the School Board are possessed of the said piece of land and that the building will be within months from

AND WHEREAS by the rules now in force in the State of Bombay for regulating the application of grant made by the Government in the aid of schools it is provided (*inter alia*) that no portion of a Building Grant shall be paid to the Managers of a school unless and until they execute or agree to execute a deed or agreement as in the said rules provided AND WHEREAS the Government has sanctioned a Building Grant of Rupees in consideration of the School Board entering into the covenants hereinafter contained NOW THIS INDENTURE WITNESSETH that in consideration of the sum of Rupees paid by the Government to the School Board, the School Board doth hereby for itself and the successors covenant with the Government that the School Board and its successors or other the Managers for the time being of the school carried on in the buildings erected or to be erected on the premises described in the schedule hereto shall—

(1) construct within months from the date hereof buildings thereon according to the plans and specifications approved or as may be approved by the Director of Public Instruction, State of Bombay, for and on behalf of the Government;

(2) maintain and keep at all times in good and substantial repair and condition all the buildings now being or which may hereafter be on the said piece of land to the end that the same may be always efficient for use for the purposes of a school;

(3) pay all the rates, charges, assessments and expenses leviable or chargeable in respect of the premises and buildings;

(4) use all the premises and buildings as and for the purposes of a public school to be devoted wholly to education and in part to secular education;

(5) manage and conduct the said school in all respect in accordance with the rules and regulations for the time being in force of the Educational Department of the Government of Bombay; and

(6) keep the said school at all times open to the inspection of the Inspecting Officers of the Educational Department of the Government of Bombay;

AND in the event of default being made by the School Board or its successors or by the Managers for the time being of the said school in the performance of any of the covenants or conditions numbered (1) to (6) hereinbefore mentioned or in the event of the School Board being found at any time by a Civil Court or by the Collector after formal inquiry under sub-section (2) of section 37 of the Bombay Land Revenue Code, 1879 (Bom. V of 1879), to be not in lawful possession of the site on which the school has been constructed the School Board or its successors will on demand by or on behalf of the Government pay to the Government the amount of the said Grant-in-aid of Rupees together with the amount or amounts of all further building grants-in-aid (if any) made by the Government for or in respect of the said school but without interest prior to the date of such demand. IN WITNESS WHEREOF Chairman and

and as two other Members of the School Board have hereunto set their hands and the common seal of the School Board hath been hereunto affixed the day and year first above written.

THE SCHEDULE ABOVE REFERRED TO.

Description and boundaries of property.

The piece or parcel of land measures in superficial area square feet be the same a little more or less, situated in the town/village of and bearing number in the taluka of in the district of and in the Registration Sub-district of in the said district and measures from North to South feet on the eastern side and feet on the western side and from East to West feet on the northern side and feet on the southern side be the same a little more or less and is and bounded as follows :—

on the North by
on the South by
on the East by
and on the West by

and is for greater clearness delineated on the plan hereto annexed signed by the aforesaid Chairman and two Members.

Signed by Chairman,
and Chairman.
and
two members of the School Board of and sealed with the common seal of the School Board of in the presence of— Members.

1. _____

2. _____

Common Seal.

Annexture :—Plan.

FORM IV-B.

Trust Deed to be executed under the Bombay Primary Education Rules, 1949, by a Municipality under the Bombay Municipal Boroughs Act, 1925 (Bombay XVIII of 1925).

(Building site acquired by a Municipality from a private person on condition that it should revert to him in the event of the site ceasing to be used for a school or any other condition which precludes a transfer to the Government.)

THIS INDENTURE made the day of one thousand nine hundred and between the Borough Municipality constituted under the Bombay Municipal Boroughs Act, 1925

(hereinafter referred to as " the Municipality ") of the one part and the Governor of Bombay (hereinafter referred to as " the Government ") of the other part WHEREAS the Municipality is possessed of the piece of land described in the schedule hereto and has applied to the Government for a Building Grant-in-aid of Rupees (Rs.) only and has satisfied the Director of Public Instruction, State of Bombay, that the Building is intended for and will be devoted to educational purposes and in part to secular education, that the plans, estimates and specifications are satisfactory, that the Municipality is possessed of the said piece of land and that the Building will be within months from ; AND WHEREAS by the rules now in force in the State of Bombay for regulating the application of grants made by the Government in aid of schools it is provided (*inter alia*) that no portion of a Building Grant shall be paid to the Managers of a school unless and until they execute or agree to execute a deed or agreement as in the said rules provided ; AND WHEREAS the Government has sanctioned a Building Grant of Rupees (Rs.) only in consideration of the Municipality entering into the covenants hereinafter contained Now THIS INDENTURE WITNESSETH that in consideration of the sum of Rupees (Rs.) only paid by the Government to the Municipality, the Municipality doth hereby for itself and its successors covenant with the Government that the Municipality and its successors or other the Managers for the time being of the school carried on in the building erected or to be erected on the premises described in the schedule hereto shall—

(1) construct within months from the date hereof buildings thereon according to the plans and specifications approved or as may be approved by the Director of Public Instruction, State of Bombay, for and on behalf of the Government ;

(2) maintain and keep at all times in good and substantial repair and condition all the buildings now being or which may hereafter be on the said piece of land to the end that the same may be always efficient for use for the purposes of a school ;

(3) pay all the rates, charges, assessments and expenses leviable or chargeable in respect of the premises and buildings ;

(4) use all the premises and buildings as and for the purposes of a public school to be devoted wholly to education and in part to secular education ;

(5) manage and conduct the said school in all respects in accordance with the rules and regulations for the time being in force of the Educational Department of the Government of Bombay ; and

(6) keep the said school at all times open to the inspection of the inspecting Officers of the Educational Department of the Government of Bombay.

AND in the event of default being made by the Municipality or its successors or by the managers for the time being of the said school in the performance of any of the covenants or conditions numbered (1) to (6) hereinbefore mentioned or in the event of the Municipality being found at any time by a Civil Court or by the Collector after formal inquiry under sub-section (2) of section 37 of the Bombay Land Revenue Code, 1879 (Bom. V. of 1879), to be not in lawful possession of the site on which the school has been constructed the Municipality or its successors will on demand by or on behalf of the Government pay to the Government the amount of the said grant-in-aid of Rupees (Rs.) only together with the amount or amounts of all further building grants-in-aid, if any, made by the Government for or in respect of the said school but without

interest prior to the date of such demand. IN WITNESS WHEREOF Chief Officer of the Municipality duly authorised in this behalf by a Resolution of the Municipality passed on the day of as required by clause (*c*) of sub-section (*3*) and clause (*a*) of sub-section (*4*) of section 48 of the Bombay Municipal Boroughs Act, 1925, has hereunto set his hand and the common seal of the Municipality hath been hereto affixed in the presence of two members of the Standing Committee as required by sub-section (*2*) of section 49 of the said Act, the day and year first above written.

THE SCHEDULE ABOVE REFERRED TO.

Description and boundaries of property.

The piece or parcel of land measures in superficial area square feet, be the same a little more or less, situated in the town of and bearing City Survey number in the taluka of in the district of and in the Registration sub-district of in the said district and measures from North to South feet on the eastern side and feet on the western side and from East to West feet on the northern side and feet on the sourthern side, be the same a little more or less, and is bounded as follows :—

on the North by
on the South by
on the East by
and on the West by

and is for greater clearness delineated on the plan hereto annexed and signed by the aforesaid Chief Officer.

Signed by Chief Officer of the Borough Municipality of in the presence of— } Chief Officer.

1. _____

2. _____

and

Sealed with the common seal of the Borough Municipality of in the presence of— }

Common Seal.

1. _____

2. _____

Members of the Standing Committee of the Borough Municipality.

Annexture :—Plan.

FORM IV-C.

Trust Deed to be executed by a District School Board under the Bombay Primary Education Rules, 1949, in respect of a grant-in-aid paid for a non-authorised Municipal school before its transfer to a District School Board under section 19 of the Bombay Primary Education Act, 1947.

(Building site acquired by a non-authorised Municipality from a private person on condition that it should revert to him in the event of the site ceasing to be used for a school or any other condition which precludes a transfer to the Government.)

THIS INDENTURE made the day of one thousand nine hundred and between the District School Board of established under the Bombay Primary Education Act, 1947 (hereinafter referred to as "the School Board") of the one part and the Governor of Bombay (hereinafter referred to as "the Government") of the other part, WHEREAS the Municipality of constituted under the Bombay Act (hereinafter referred to as "the Municipality") was possessed of the piece of land described in the schedule hereto and applied to the Government for a building grant-in-aid of Rupees (Rs.) only for a school house to be known as the and satisfied the Director of Public Instruction, State of Bombay, that the building was intended for and would be devoted to educational purposes and in part to secular education, that the plans, estimates and specifications were satisfactory, and that the Municipality was possessed of the said piece of land and that the Building will be within months from AND WHEREAS by the rules now in force in the State of Bombay for regulating the application of grants made by the Government in aid of schools it is provided (*inter alia*) that no portion of a Building Grant shall be paid to the Managers of a school unless and until they execute or agree to execute a deed or agreement as in the said rules provided AND WHEREAS the Government had sanctioned a building grant of Rupees (Rs.) only which sum was paid to the Municipality on the day of 194 (and the payment of which the School Board on behalf of the Municipality hereby acknowledges) in consideration of the Municipality entering into the covenants hereinafter contained, AND WHEREAS the Municipality not being a Non-authorised Municipality under the Bombay Primary Education Act, 1947, has in pursuance of Government Notification in the Educational Department, No. dated the day of 194 issued under section 19 of the said Act, transferred to the School Board all its Primary schools with their lands, buildings, records and equipment, including the said piece of land, which vested in the Municipality; AND WHEREAS the School Board is now possessed of the said piece of land described in the schedule hereto; AND WHEREAS the School Board has, in consideration of the building grant of Rupees (Rs.) only paid to the Municipality as aforesaid and in virtue of the transfer to itself of the Municipal schools as aforesaid, agreed to enter into the covenants hereinafter contained; NOW THIS INDENTURE WITNESSETH that in consideration of the sum of Rupees (Rs.) only paid as aforesaid by the Government to the said Municipality, the School Board doth hereby for itself and its successors covenant with the Government that the School Board and its

successors or other the managers for the time being of the school carried on in the buildings erected or to be erected on the premises described in the schedule hereto shall—

(1) construct within months from the date hereof buildings thereon according to the plans and specifications approved or as may be approved by the Director of Public Instruction, State of Bombay, for and on behalf of the Government;

(2) maintain and keep at all times in good and substantial repair and condition all the buildings now being or which may hereafter be on the said piece of land to the end that the same may be always efficient for use for the purposes of a school;

(3) pay all the rates, charges, assessments and expenses leviable or chargeable in respect of the premises and buildings;

(4) use all the premises and buildings as and for the purposes of a public school to be devoted wholly to education and in part to secular education;

(5) manage and conduct the said school in all respects in accordance with the rules and regulations for the time being in force of the Educational Department of the Government of Bombay; and

(6) keep the said school at all times open to the inspection of the Inspecting Officers of the Educational Department of the Government of Bombay.

AND in the event of default being made by the School Board or its successors or by the Managers for the time being of the said school in the performance of any of the covenants or conditions numbered (1) to (6) hereinbefore mentioned or in the event of the School Board being found at any time by a Civil Court or by the Collector after formal inquiry under sub-section (2) of section 37 of the Bombay Land Revenue Code, 1879 (Bom. V of 1879), to be not in lawful possession of the site on which the school has been constructed the School Board or its successors will on demand by or on behalf of the Government pay to the Government the amount of the said Grant-in-aid of Rupees (Rs.) only together with the amount or amounts of all further building Grants-in-aid, if any, made by the Government for or in respect of the said school but without interest prior to the date of such demand. IN WITNESS WHEREOF

Chairman and
and
as two other members

of the School Board have hereunto set their hands and the common seal of the School Board hath been hereunto affixed, the day and year first above written.

THE SCHEDULE ABOVE REFERRED TO.

Description and boundaries of property.

The piece or parcel of land measures in superficial area square feet, be the same a little more or less, situated in the town/village of and bearing survey number in the taluka of in the district of and in the Registration Sub-district of in the said district and measures from North to South feet on the eastern side and feet on the western side, and from East to West feet on the northern side and feet

on the southern side, be the same a little more or less, and is bounded as follows :—

on the North by
on the South by
on the East by
and on the West by

and is for greater clearness delineated on the plan hereto annexed and signed by the aforesaid Chairman and two members.

Signed by Chairman
and
and
two members of the School Board of
and sealed with the
common seal of the School Board of
in the presence of—

Chairman.

Members.

1. _____

2. _____

Common Seal

Annexture :—Plan.

FORM OF RECEIPT.

*For District School Boards and Municipalities.**

* (Under Bombay Primary Education Act, 1947, and the Bombay District Municipal Act, 1901.)

We †
and ‡
and ‡

† Here enter the name of the Chairman/President.
‡ Here enter the names of two Members.

two Members of the
hereby acknowledge that on the
day of 194 , the sum of
(Rs.)
paid to only was
as a further building grant on account of by the Government of Bombay
to the
in the at taluka of the
district and we hereby certify
that the said amount of (Rs.
only) has been received by us as

a grant-in-aid given subject to all the conditions mentioned in the indenture between the said and the dated the

Chairman / President,

1. _____

2. _____

One anna Stamp.

Members,

Witnesses to signature

1. _____

2. _____

Common Seal.

Dated 19 .

FORM OF RECEIPT.

For Municipalities constituted under the Bombay Municipal Borough Act, 1925 (Bom. XVIII of 1925).

I Chief Officer of the Municipality of hereby acknowledge that on the day of 19 , the sum of Rupees was paid to the Municipality by the Government of Bombay as a further building grant on account of School in the District and I hereby certify that the said amount of Rupees has been received by me as a grant-in-aid, given subject to all the conditions mentioned in the indenture between the said Municipality of and the dated the

Witnesses to signature.

1. _____

2. _____

One anna Revenue stamp.

Chief Officer of the Municipality of

Sealed with the Common Seal of the Municipality of in the presence of—

1. _____

2. _____

Common Seal.

Members of the Standing Committee.

Dated 19 .

FORM OF RECEIPT.

For a District School Board in respect of a grant-in-aid paid for a non-authorised Municipal School before its transfer to the District School Board under section 19 of the Bombay Primary Education Act, 1947.

In consideration of the further grant-in-aid of Rupees (Rs.) only paid by the Government of Bombay on the day of 19 to the Municipality of (hereinafter referred to as " the Municipality ") for the Primary school at in the taluka of in the District of we , Chairman of the District School Board of and and, two members of the said District School Board to which all Primary schools with their lands, buildings, records and equipment, which vested in the Municipality, have been transferred in pursuance of Government Notification in the Educational Department No. dated the 19 issued under section 19 of the Bombay Primary Education Act, 1947, on the Municipality becoming a non-authorised Municipality under the said Act, hereby on behalf of the Municipality certify that the said amount of rupees (Rs.) only has been received by us as a grant-in-aid given subject to all the conditions mentioned in the indenture between the Municipality and the

Dated

One anna Revenue stamp.

Witnesses to signatures.

1.

2.

Chairman, District School Board.

1.

2.

Members, District Local Board.

Common Seal.

Dated day of 19

FORM OF AGREEMENT.

In consideration of the grant-in-aid of Rupees
paid by the Government of Bombay (hereinafter referred to as
" the Government ") to me*/us*/†the Municipality of*/District School Board* for Building

I*/We*/the said Municipality*/the said District School Board* do*/does* hereby agree—

(*a*) to maintain the building in proper repair ;

(*b*) to manage the school in accordance with the rules and regulations of the Educational Department of the Government ;

(*c*) to subject the school to inspection by that Department ;

(*d*) to use the building as a school to be devoted wholly to education and in part to secular education ;

(*e*) to keep the building insured in the names of the Managers and the Government jointly subject to the provisions of rule 12 of the Building Grant Rules ; and

(*f*) in the event of default being made by the Managers in the performance of any of the preceding conditions or in the event of the Managers being found at any time by a Civil Court or by the Collector after formal inquiry under sub-section (2) of section 37 of the Bombay Land Revenue Code, 1879 (Bom. V of 1879), to be not in lawful possession of the site on which the school has been constructed to repay on demand by the Director of Public Instruction, State of Bombay, the aggregate amount of all building grants made by the Government in respect of the school.

‡Signed by
President
and
and
two councillors and sealed with the common seal of the Municipality of in the presence of— President.

Councillors.

Seal.

* Delete the words not required.
† Under the Bombay District Municipal Act, 1901.
‡ The form of attestation suitable to the case should be used.

and
*Signed by Chairman } Chairman.

(and
and
two members and sealed with the common seal) of the District School Board in the presence of—
and † } †Members.

Common Seal.

Dated this the day of 19 .

FORM OF AGREEMENT.

For a Municipality constituted under the Bombay Municipal Boroughs Act, 1925.

In consideration of the grant-in-aid of Rupees (Rs.) only paid by the Government of Bombay (hereinafter referred to as "the Government") to the Borough Municipality (hereinafter referred to as "the Municipality") for School No. the Municipality does hereby agree—

(*a*) to maintain the building of the school in proper repair;

(*b*) to manage the school in accordance with the rules and regulations of the Educational Department of the Government;

(*c*) to subject the school to inspection by that Department;

(*d*) to use the building as a school to be devoted wholly to education and in part to secular education;

(*e*) to keep the building insured in the names of the Municipality and the Government jointly subject to the provisions of rule 12 of the Building Grant Rules; and

(*f*) in the event of default being made by the Municipality in the performance of any of the preceding conditions or in the event of the Municipality being found at any time by a Civil Court or by the Collector after formal inquiry under sub-section (*2*) of section 37 of the Bombay Land Revenue Code, 1879 (Bom. V of 1879), to be not in lawful possession of the site on which the school has been constructed to repay on demand by the Director of Public Instruction, State of Bombay, the aggregate amount of all building grants made by the Government in respect of the said school.

---

* The form of attestation suitable to the case should be used.
† The seal and the portion ( ) should be omitted where the grant does not exceed Rs. 500.

Signed by Chief Officer of the Borough Municipality in the presence of— } Chief Officer, Borough Municipality.

1. _____

2. _____

and Sealed with the Common Seal of the Borough Municipality in the presence of— }

1. _____

2. _____

Common Seal.

Members of the Standing Committee of the Borough Municipality. }

Place

Dated the day of 19

FORM OF AGREEMENT.

For District School Board in respect of a grant-in-aid paid to a non-authorised Municipal school before its transfer to the District School Board under section 19 of the Bombay Primary Education Act, 1947.

In consideration of the building grant-in-aid of Rupees paid by the Government of Bombay (hereinafter referred to as "the Government") on the 19 to the Municipality of for the Primary School, on condition of that body entering into an agreement as provided under rule 11 of the Rules for Building Grants and Grants for sites appended as

Schedule I to the Bombay Primary Education Rules, 1949, the District School Board of to whom all Primary schools with their lands, buildings, records and equipment which vested in the said Municipality, have been transferred in pursuance of Government Notification in the Educational Department No. , dated the 19 issued under section 19 of the Bombay Primary Education Act, 1947, on the said Municipality becoming a non-authorised Municipality under the said Act, hereby agrees—

(*a*) to maintain the building in proper repair;

(*b*) to manage the school in accordance with the rules and regulations of the Educational Department of the Government;

(*c*) to subject the school to inspection by that Department;

(*d*) to use the building as a school to be devoted wholly to education and in part to secular education;

(*e*) to keep the building insured in the names of the Managers and the Government jointly, if this is considered necessary by the Executive Engineer; and

(*f*) in the event of default being made in the performance of any of the preceding conditions or in the event of the School Board being found at any time by a Civil Court or by the Collector after formal inquiry under sub-section (2) of section 37 of the Bombay Land Revenue Code, 1879 (Bom. V of 1879), to be not in lawful possession of the site of the school to repay on demand by the Director of Public Instruction, State of Bombay, the aggregate amount of all building grants made by Government in respect of the school.

Signed, sealed and delivered by Chairman (and and two members of the District School Board of)* — Chairman. Members.

1. _____

2. _____

Common Seal.

Dated this the day of 19 .

* The seal and the portions ( ) should be omitted where the grant does not exceed Rs. 500.

SCHEDULE J.

(*Vide* rule 153 of the Bombay Primary Education Rules, 1949.)

INSTRUCTIONS FOR THE GUIDANCE OF THE ADMINISTRATIVE OFFICERS IN PREPARING THE DISTRICT SCHOOL BOARD BUDGET.

1, In the preparation of the budget the aim is to achieve as close an approximation to the actuals as possible. This demands the exercise of the utmost foresight in estimating revenue and in anticipating expenditure. The preparation of the budget is no mere routine matter but one which demands the careful personal attention of the Administrative Officer. His most important duty in this respect is, therefore, to keep a constant watch on the progress of revenue and expenditure of the District School Board. For this purpose, it is desirable for the Administrative Officer to keep a register of sanctions. Sanctions to recurring contingent expenditure should also be subject to a periodical review. Only such of the receipts and payments should be taken into account as the Administrative Officer actually expects to be realised or made during the course of the budget year.

2. It is imperative that the whole process of preparing and sanctioning the budget should be worked to the prescribed time-table. The Administrative Officer should, therefore, scrupulously observe the dates fixed for the submission of the budget.

3. The budget of a District School Board is divided in the following 3 sections, namely :—

(1) Section A-Estimates of receipts.

(2) Section B-Estimates of expenditure.

(3) Section C-New items of expenditure.

There is a special reason why new items of expenditure are required to be shown separately. Most of the funds required for financing expenditure in a District School Board area are provided by Government. Therefore, before the expenditure on new items of expenditure can be entered in the District School Board budget such expenditure must be provided for in the State Budget. Hence the new items are required to be shown separately. As soon as the State budget is sanctioned, the amount required for sanctioned new items will be entered by Government or by the officer or authority empowered by Government in this behalf while sanctioning the District School Board budget.

4. *Receipts.*—The estimates of receipts under the head "1-Contributions" should be based on the existing rates of taxes, cesses, duties etc., and no increase or reduction in those rates, cesses or duties should be proposed which have not been sanctioned by competent authorities. If proposals of this kind have already been submitted for sanction, the financial effect of the proposals should be indicated in the forwarding remarks.

It is essential that the estimates of revenue should be based on a consideration of all relevant data, e.g., the course of receipts for the previous years after allowing abnormal features and any extra items that may be actually realised in the ensuing year. Explanations for large variations from the past actuals should be furnished.

For instance, in estimating receipts from revenues described in clauses (*b*) and (*c*) of section 75 of the District Local Board Act, 1923, the following will be relevant factors :—

(*a*) Probable nature of the agricultural season during the current year;

(*b*) Amount likely to remain outstanding at the end of the current year;

(*c*) Amount likely to be collected next year out of the next revenue year's demand;

(*d*) Any special credits anticipated next year;

(*e*) Any recognisable regularity in the figures for the past years.

The figure under the head "VI-Grant from Government" should be equal to the estimated expenditure during the budget year minus the estimated receipts other than receipts from Government grant.

5. *Expenditure.*—(A) The following general instructions should be borne in mind :—

(1) In preparing the budget estimates of expenditure for the coming year, the average of the normal actuals of the past 3 years should invariably be kept in sight : not indeed as something that could conveniently be repeated, but as the basic for an intelligent anticipation which takes into account any noticeable tendency for the expenditure to rise or decline, any abnormal feature during the past years, any recognisable regularity in the pitch of the expenditure and any special features known to be certain or likely to arise during the next year.

(2) Care should be taken to ensure that provision is made for sanctioned or authorised items only and not for schemes of new expenditure which should be included in Section C of the budget.

Explanation.—(*a*) "Sanctioned" items mean such items as have been actually sanctioned by orders issued to that effect by Government or other competent authority.

(*b*) "Authorised" items mean items which have not been sanctioned by Government or competent authority, but the expenditure on which is authorised by Government or such authority pending final scrutiny of these items.

(3) The pay and fixed allowances of the establishment for a month become due only at the end of the month. Provision for such pay for the month of March should, therefore, be made in the budget estimates for the following year.

(4) Ordinarily provision for new establishment should not be made in the budget from earlier than 1st April or such time as the post is required to be created, e.g., beginning of an academic term.

(B) *Special instructions relating to certain classes of expenditure.*—The special instructions contained in the following paragraphs should be observed in preparing the budget estimates under various sub-heads :—

(*a*) *Pay of General Establishment.*—(*i*) The Administrative Officer should first prepare estimates in the form prescribed in Annexture E and after these estimates are prepared he should prepare estimates in the form prescribed in Annexture D.

(*ii*) *Pay of establishment.*—The estimates should be framed on the basis of the expenditure likely to be incurred in the coming year on account of the staff likely to be on duty and the actual pay likely to be drawn by them. In the case of establishment on a progressive or time-scale of pay provision should also be made for increments falling due during the budget year. Posts held in abeyance should not be budgetted for.

(*iii*) *Special pay or allowances classed as pay.*—Only such special pay or allowances should be provided under this minor head as count for purposes of pension or provident fund. For instance, in the case of primary school teachers the following pay or allowances should be included under this head :—

(1) Head Master's or First Assistant's allowances now treated as personal pay ;

(2) Allowances to Agricultural Bias or craft teachers.

(3) Charge allowance to primary teachers promoted as attendance officers, etc.

The allowance of Rs. 5 per mensem given to primary school teachers in Basic schools or local allowance are not pensionable. Such non-pensionable allowances should be shown under the proper minor head under " allowances ".

(*iv*) *Leave salary and pay of substitutes.*—Provision should not be made for leave salary unless there are good grounds for believing that certain members of the staff will go on leave during the budget year. Such provision should not be made on a percentage basis but should be based entirely on actuals plus a proportionate increase for new posts.

(*v*) *Allowances.*—Under this sub-head all additions to pay which are classed as compensatory allowances and which are not pensionable should be included, e.g. travelling allowance, fixed conveyance allowance, house rent allowance, compensatory local allowance, dearness allowance, etc. If the estimates of the coming year exceed the past years' averages a brief explanation should be given. Not all members of the District School Board staff are entitled to the various allowances specified under this head. For instance, fixed conveyance allowance (i.e. cycle allowance) is admissible to attendance officers and their peons and not to teachers. Similarly Local allowance will be admissible mostly to teachers. The Administrative Officer should particularly bear this in mind. Provision for travelling allowance to teachers should not be made under this sub-head but under " (3)—recurring expenditure on primary schools—(i) Travelling Allowance to teachers ".

(*vi*) *Contingencies.*—In estimating expenditure on contingencies, the average actuals of the past three years should not be accepted as a matter of course, as a basis of framing estimates for the ensuing year since the expenditure for the previous years may include extraordinary items and the adoption of the average may lead to waste and extravagance. The details of actuals and, if necessary, the contingent registers should be examined to see that the expenditure proposed is really the absolute minimum.

(*vii*) The District School Board has now no power to modify the estimates relating to the pay and allowances of the establishment. A great responsibility, therefore, devolves on the administrative officer. It is his duty to see that the estimates are prepared most carefully and represent the actual requirements of the District School Board for the next year.

6. *Other expenditure.*—What is stated in the foregoing paragraphs holds good also in the case of other expenditure. Estimates for such expenditure should be prepared after considering the estimates for the past three years. They should represent, as far as possible, the actual requirements of the District School Board for the next year. They should lean neither on the side of inadequacy or extravagance.

7. *New items of expenditure.*—(1) A " new item of expenditure " means an item which involves the adoption of a new policy, provision of a new facility, increase or alteration in the existing facility or any other item involving the school board into additional expenditure.

(2) All new items of expenditure should be separately shown in section C of the budget. If the administrative officer feels any doubt as to whether any particular expenditure should be treated as new he should invariably seek the advice of the Director.

(3) No proposal should ordinarily be included in the statement of new items of expenditure unless it has been administratively approved by Government. In order that such proposal should be administratively approved by Government in good time for inclusion in the statement of new items of expenditure, the administrative officer should see that it is forwarded by the district school board to the Government through the Director so as to reach the Director at least one year and half before the beginning of the financial year in which it is proposed to implement the proposal.

Explanation.—"Administrative approval" means the formal acceptance of a scheme, proposal or work by Government for the purposes of incurring expenditure thereon as and when funds permit.

(4) While estimating the cost on account of such new items, the administrative officer should see that the cost approximates as far as possible to the actual cost likely to be incurred during the budget year. Full details of such extra cost and the major or minor head (and its units) to which it is debitable should also be furnished.

SCHEDULE K.

LIST OF RECOGNISED UNIVERSITIES.

[*Vide* sub-rule (2) of Rule 171 of the Bombay Primary Education Rules, 1949.]

Universities in India.

(1) The University of Agra.
(2) The University of Aligarh (Muslim).
(3) The University of Allahabad.
(4) The University of Andhra.
(5) The University of Annamalai.
(6) The University of Benares (Hindu).
(7) The University of Bombay.
(8) The University of Calcutta.
(9) The University of Delhi.
(10) The University of East Punjab.
(11) The University of Lucknow.
(12) The University of Madras.
(13) The University of Mysore.
(14) The University of Nagpur.
(15) The University of Patna.
(16) The University of Poona.
(17) The University of Travancore.
(18) The Osmania University.

(19) The Gujarat Vidyapeeth.
(20) The Tilak Maharashtra University.
(21) The S. N. D. T. Indian Women's University.
(22) The University of Saugor.
(23) The University of Rajputana.

Foreign Universities.

(1) The University of Dacca.
(2) The University of Hongkong.
(3) The University of Rangoon.
(4) The University of Sind.
(5) The University of West Punjab.
(6) The Universities in Great Britain and Ireland.

SCHEDULE L.

PROCEDURE FOR THE ELECTION OF MEMBERS OF THE STATE BOARD OF PRIMARY EDUCATION.

[*Vide* rule 171 (3) of the Bombay Primary Education Rules, 1949.]

(1) The Returning Officer shall fix the date, hour and place for each of the following stages of the election, namely :—

(*a*) receipt of nomination papers ;

(*b*) scrutiny of nomination papers ;

(*c*) counting of votes.

(2) The notice of election stating the date fixed for (*a*) receipt of nomination papers, (*b*) scrutiny of nomination papers and (*c*) counting of votes shall be forwarded to all the School Boards concerned, and shall also be published in the Official Gazette, at least 8 weeks before the date fixed for the counting of the votes. The date fixed for the receipt of nomination papers shall be not less than six weeks before the date fixed for the counting of the votes.

(3) Any two members of a School Board may nominate as a candidate any person who holds the requisite qualifications by sending to, or delivering at the office of the Returning Officer a nomination paper in the sub-joined form :—

FORM OF NOMINATION PAPER.

1. *School Board of ———————— District / Municipality.

2. *Description of the vacancy for which the candidate is nominated.
   (1) Representative of District School Boards ————
   (2) Representative of Municipal School Boards ————

3. Name of the candidate, with surname, if any.

* What is not required should be scored out.

4. Father's name, with surname, if any ...

5. Age and sex ...

6. Address ...

7. Educational qualifications, with years of passing the University examinations, and full particulars regarding the period of service and the name of the institution, if the candidate has served as a professor in a College affiliated to a statutory University in the State or has served as a head master in an approved school or recognised high school.

8. Name of the proposer* ...

9. Signature of the proposer* ...

10. Name of the seconder ...

11. Signature of the seconder ...

Declaration of the candidate.

I hereby signify my willingness to serve, if I am elected.

Date _____ Signature of the candidate.

Date _____ Signature and designation of the Attesting Officer.

(4) A nomination paper shall be submitted by the candidate himself as assenting to his nomination and by two members of any of the School Boards concerned as proposer and seconder. The signatures of the candidate and his proposer and seconder must be attested by a Magistrate, a Justice of Peace, a Gazetted Officer or by the Administrative Officer of a School Board, President of the District Local Board or Authorised Municipality. Nomination papers in the prescribed form shall be supplied by the Returning Officer to every candidate or any person on his behalf asking for the same.

(5) In respect of any one election no member of a School Board shall subscribe as proposer or seconder more than one nomination paper.

(6) The Returning Officer shall examine the nomination papers and shall decide all objections which may be made to any nomination and may either on such objection or on his own motion after such summary enquiry, if any, as he thinks necessary refuse any nomination on any of the following grounds :—

(*i*) that the candidate is ineligible for the vacancy for which he has been nominated, or

* The proposer and seconder must be members of the same School Board.

(*ii*) that the proposer or seconder is not qualified for subscribing a nomination paper, or

(*iii*) that there has been a failure to comply with any of the prescribed provisions.

(7) The Returning Officer shall endorse on such nomination paper his decision accepting or rejecting the same and if the nomination paper is rejected he shall record in writing a brief statement of the reasons for such rejection and shall communicate his decision to the candidate concerned forthwith.

(8) An appeal may be made to Government against an order of the Returning Officer rejecting the nomination paper within three days from the date of the receipt of the order of the Returning Officer.

(9) Government shall decide the appeal as soon as possible and shall communicate the decision to the Returning Officer forthwith. The decision of Government on any such appeal shall be final.

(10) After the completion of the scrutiny of nomination and after the decision of Government in the case of an appeal, if any, is received, the Returning Officer shall forthwith prepare a list of valid nominations and shall forward the same to all the School Boards concerned requesting them to hold the election. Each School Board shall hold the election in accordance with the regulations made by it in this behalf within three weeks of the receipt of the list and shall report to the Returning Officer the result of the decision in the form given below :—

Result of the election of members of the State Board of Primary Education.

The School Board of———————— District / Municipality

Has elected Mr. / Miss/Mrs. ———————————————for the

Seat reserved for District School Boards / Municipal School Boards

Date————— Chairman,

School Board of District / Municipality.

(11) The Returning Officer shall count the votes given to each candidate and when the counting of votes has been completed he shall forthwith declare the candidates to whom the largest number of votes have been given to be elected. If there is an equal number of votes in favour of each of two or more candidates for one vacancy the election shall be determined by the Returning Officer by drawing lots.

(12) The Returning Officer shall communicate the names of the persons elected to Government.

SCHEDULE M.

[*Vide* Rule 193 (4) of the Bombay Primary Education Rules, 1949.]

RULES FOR THE ADMINISTRATION, MAINTENANCE AND USE OF THE SCHOOL BOARD PROVIDENT FUND.

1. *Commencement and application.*—(1) These rules shall come into force from——————————.

(2) These rules shall apply to the employees of a District School Board or the primary school teachers of an Authorised Municipality (hereinafter referred to as the said employees) for whom subscription to the provident fund is compulsory under sub-rule (2) of rule 193 of the Bombay Primary Education Rules, 1949, or who, under sub-rule (3) of the said rule 193, have exercised the option of joining the provident fund in lieu of pension :

Provided that any rules applicable to a provident fund established for the benefit of the employees before the date on which these rules come into force are hereby repealed and the said provident fund shall from and after the said date be governed by these rules in so far as such rules are applicable.

2. *Discontinuance of payment of pension contribution.*—If any of the said employees towards whose pension the School Board is contributing exercises the option under sub-rule (3) of rule 193 of the Bombay Primary Education Rules, 1949, to join the provident fund in lieu of pension, pension contribution on his behalf shall cease to be paid by the School Board with effect from the date of his joining the provident fund.

3. *Rate of subscription and manner of recovery.*—(1) The amount of subscription shall be fixed by the subscriber himself, subject to the following conditions :—

(*a*) It shall be expressed in whole rupees ; and

(*b*) It may be any sum, expressed in whole rupees, not being less than $6\frac{1}{4}$ per cent. of his pay (i.e. one anna in the rupee) and not more than $15\frac{5}{8}$ per cent. of his pay (i.e. two and half annas in the rupee).

Note 1.—" Pay " includes officiating pay.

Note 2.—If the amount of the pay is not expressible in whole rupees ; the subscription shall be calculated on the nearest sum in whole rupees below that amount.

(2) The subscriber shall intimate to the Administrative Officer the fixation of the amount of his subscription in the following manner :—

(*a*) If he was on duty on the 31st March of the preceding year, by deduction which he makes in this behalf from his pay bill for that month ;

(*b*) If he was on leave on the 31st March of the preceding year and elected not to subscribe during such leave or was under suspension on that date, by the deduction which he makes in this behalf from his first pay bill on his return to duty.

(*c*) If he joins the provident fund for the first time, by the deduction which he makes in this behalf from his pay bill for the month following that in which he joins the provident fund.

(*d*) If he was on leave on the 31st March of the preceding year, and continues to be on leave and has elected to subscribe during such leave, by the deduction which he causes to be made in this behalf from his salary bill for that month.

(3) The amount of subscription so fixed shall remain unchanged throughout the year :

Provided that if a subscriber is on duty for a part of the month and on leave for the remainder of that month and if he has elected not to subscribe during leave, the amount of the subscription payable shall be proportionate to the number of days spent on duty in that month. Such proportionate amounts of subscription shall also be rounded off to the nearest rupee.

(4) Subscription as fixed by the subscriber under sub-rule (2) shall be deducted every month from his pay.

4. *School Board's contribution, its rate, date of payment etc.*—The School Board's contribution shall be equal to $6\frac{1}{4}$ per cent. of the subscriber's pay including officiating pay drawn on duty during the year and shall be made yearly on 31st March except in the case of death or retirement of a subscriber when the School Board's contribution to that subscriber's account shall be calculated to date. The amount of contribution payable by the School Board shall be rounded to the nearest whole rupee (fraction of a rupee exceeding eight annas counting as the next higher rupee).

Note.—Should a subscriber elect to subscribe during leave, his leave salary shall, for purposes of this rule, be deemed to be the pay drawn on duty.

5. *Investment and deposit of accumulated funds.*—All accumulations in the Provident Fund shall be deposited or invested in accordance with the provisions of section 46 of the Act.

6. *Keeping separate accounts for each subscriber.*—Separate accounts shall be kept for each subscriber, showing the amount of his own personal subscriptions with the interest thereon as it accrues, and his share of the yearly contribution of the School Board with interest thereon. A copy of his account for the previous year shall be furnished to each subscriber not later than 31st July in each year.

7. *Rate of Interest.*—(1) Interest at such rate as may from time to time be fixed by Government in regard to the Bombay General Provident Fund shall be allowed by the School Board on all payments by the subscriber and also on the School Board's contribution, and credited yearly on 31st March or at death or retirement of any particular subscriber, whichever may be earlier; but the minimum rate of four per cent. applicable to certain subscribers of the Bombay General Provident Fund shall not be allowed to the subscriber.

(2) Interest shall be calculated and credited in the following manner :—

(*i*) On the amount at the credit of a subscriber on the last day of the preceding year, less any sums withdrawn during the current year—interest for twelve months.

(*ii*) On sums withdrawn during the current year—interest from the beginning of the current year up to the last day of the month preceding the month of withdrawal.

(*iii*) On all sums credited to the subscriber's account after the last day of the preceding year—interest from the date of deposit up to the end of the current year.

(*iv*) The total amount of interest shall be rounded off to the nearest rupee (*i.e.*, eight annas and above shall be treated as one rupee and amounts less than eight annas shall be neglected).

8. *Limit of service with regard to eligibility for School Board's contribution.*—A subscriber shall be entitled to the School Board's contribution with interest thereon if he has put in service of five years or more except when he has been dismissed. The period of five years shall be calculated from the commencement of the subscriber's service and not from the date of his joining the provident fund, and shall be exclusive of the period spent on leave without allowances :

Provided that a subscriber who dies while in the service of the School Board shall be deemed to have been entitled to the School Board's contribution irrespective of the period of his service.

9. *Payment of School Board's contribution in special cases.*—In the event of the retirement before completion of the period prescribed by rule 8, subscribers shall receive the amount of their own subscriptions only with interest thereon, the School Board's contribution lapsing to the Board :

Provided, however, that in case of retirement is necessitated by certified incapacity for further service, or other causes beyond the subscriber's control, the School Board may pay their contribution to the subscriber.

Note.—The word " Retirement " occurring in this rule includes quitting service by resignation, dismissal or discharge.

10. *Forfeiture of claims to School Board's contribution.*—Dismissal for misconduct shall entail forfeiture of the subscriber's claim to the School Board's contribution with interest thereon :

Provided that in cases in which the misconduct does not amount to an offence punishable by a Criminal Court the School Board may allow a subscriber dismissed for misconduct to receive such part of the School Board's contribution with interest as the School Board may decide. The balance, if any, shall lapse to the School Board.

11. *Assignments and encumbrances not binding on the School Board.*—The School Board shall not be bound by or recognise any assignment or encumbrance created or attempted to be created, which affects the disposal of the accumulations of a subscriber who dies before retirement.

12. *Grant of advances for special reasons.*—(*i*) The School Board may, at its discretion, in cases of urgent need, grant advances to subscribers out of the fund towards any of the following purposes :—

(*a*) to pay expenses incurred in connection with the illness of a subscriber or any person actually dependent on him ;

(*b*) to pay expenses in connection with marriages, funerals, or ceremonies which by the religion of the subscriber, it is incumbent upon him to perform, and in connection with which it is obligatory that expenditure should be incurred.

(*ii*) The advances shall not ordinarily exceed three months' pay and shall in no case exceed the amount of the subscriber's subscriptions including accrued interest.

(*iii*) When an advance has already been granted to a subscriber no subsequent advance shall be granted to him, except for very special reasons to be recorded in writing, until, at least 12 calendar months have elapsed since the complete repayment of the last advance taken.

(*iv*) The amount of any advance to a subscriber under this rule shall be debited to the separate account of such subscriber as against his own subscriptions to the fund and will operate to reduce *Pro tanto* the amount standing to his credit in the fund, from time to time, until the advance shall be recovered, the recoveries being credited to the said account as and when made. No interest shall be credited to the account of any subscriber to whom an advance has been made on any amount for the time being debited to his account representing an outstanding advance.

(*v*) An advance shall be recoverable by the School Board by deduction from the salary of the subscriber to whom it is made by monthly instalments of such number, not being more than 24, as shall be fixed by the School Board in each case. Such recoveries shall commence from the first month in respect of which the subscriber shall draw full pay after the advance has been made.

Note.—A subscriber may, however, at his option make repayment in less than the number of instalments fixed by the School Board. Recovery shall not be made except with the subscriber's consent while he is on leave or in receipt of subsistence allowance. When two or more advances are made, each advance should be treated separately and the monthly deduction of not less than 1/24th of each advance shall be made until that advance is cleared.

(*vi*) When an advance is repayable in 12 instalments, an additional instalment representing interest and equivalent to 3½ per cent. of the amount of the advance shall be paid in the month following that in which the last instalment is paid. Similarly, two additional instalments representing interest, each equivalent to 3½ per cent. of the total amount of the advance, shall be paid when the advance is repayable in more than 12 instalments.

In calculating interest as above, a fraction of a rupee shall be taken at the next higher whole rupee if it exceeds eight annas, and shall be ignored if it does not.

13. *Definition of family.*—For the purpose of these rules, the "family" of a subscriber shall mean—

(*i*) in the case of a male subscriber, the wife or wives and children of a subscriber, and the widow or widows and children of a deceased son of the subscriber :

Provided that if a subscriber proves that his wife has been judicially separated from him or has ceased under the customary law of the community to which she belongs to be entitled to maintenance she shall henceforth be deemed to be no

longer a member of the subscriber's family in matters to which these rules relate, unless the subscriber subsequently indicates by express notification in writing to the Administrative Officer that she shall continue to be so regarded.

(*ii*) in the case of a female subscriber, the husband and children of a subscriber and the widow or widows and children of a deceased son of a subscriber :

Provided that if a subscriber by a notification in writing to the Administrative Officer expresses her desire to exclude her husband from her family, the husband shall henceforth be deemed to be no longer a member of the subscriber's family in matters to which these rules relate unless the subscriber subsequently cancels formally in writing her notification excluding him.

Note I.—" Children " means legitimate children.

Note II.—An adopted child shall be considered to be a child within the meaning of this rule when, under the personal law of the subscriber, adoption is legally recognised as conferring the status of a natural child. If a doubt arises in an individual case, the Administrative Officer shall refer the matter to the Legal Adviser of the District School Board or Authorised Municipality and his opinion shall be final for the purposes of these rules. A nomination in favour of an adopted child is made at the subscriber's risk and may be challenged at any time.

14. *Nomination by subscriber.*—(1) A subscriber shall, as soon as may be, after joining the Fund, send to the Administrative Officer a nomination conferring on one or more persons the right to receive the amount that may stand to his credit in the Fund, in the event of his death before that amount has become payable, or having been payable, has not been paid :

Provided that if, at the time of making the nomination, the subscriber has a family, the nomination shall not be in favour of any person or persons other than the members of his family.

(2) If a subscriber nominates more than one person under sub-rule (1) he shall specify in the nomination the amount or share payable to each of the nominees in such manner as to cover the whole of the amount that may stand to his credit in the Fund at any time.

(3) Every nomination shall be in such one of the Forms set forth in the first Annexure as is appropriate in the circumstances.

(4) A subscriber may at any time cancel a nomination by sending a notice in writing to the Administrative Officer :

Provided that the subscriber shall, along with such notice, send a fresh nomination made in accordance with the provisions of sub-rules (1) to (3).

(5) Without prejudice to the provisions of sub-rule (4), a subscriber shall along with every nomination made by him under this rule send to the Administrative Officer a contingent notice of cancellation which shall be in such one of the Forms set forth in the second Annexture as is appropriate in the circumstance.

(6) Immediately on the occurrence of any event by reason of which the contingent notice of cancellation referred to in sub-rule (5) becomes operative and the nomination to which that notice relates consequently stands cancelled, the subscriber shall send to the Administrative Officer a fresh nomination made in accordance with the provisions of sub-rules (1) to (3).

(7) Every nomination made, and every notice of cancellation given, by a subscriber shall, to the extent that it is valid, take effect on the date on which it is received by the Administrative Officer.

(8) Nothing in sub-rules (1) to (3) shall be deemed to invalidate or to require the replacement by a nomination thereunder, of a nomination duly made before, and subsisting on the date on which these rules come into force :

Provided that in respect of every such nomination, the subscriber shall, as soon as may be after the said date, send to the Administrative Officer a contingent notice of cancellation in such one of the Forms set forth in the Second Annexture as is appropriate in the circumstances.

15. *Payment of the accumulations in the Provident Fund.*—On the death of a subscriber before the amount standing to his credit has become payable, or where the amount has become payable before payment has been made ;

(*i*) when the subscriber leaves a family—

(*a*) if a nomination made by the subscriber in accordance with the provisions of rule 14 in favour of a member or members of his family subsists, the amount standing to his credit in the Fund or the part thereof to which the nomination relates shall become payable to his nominee or nominees in the proportion specified in the nomination ;

(*b*) if no such nomination in favour of a member or members of the family of the subscriber subsists or if such nomination relates only to a part of the amount standing to his credit in the fund, the whole amount or the part thereof to which the nomination does not relate, as the case may be, shall notwithstanding any nomination purporting to be in favour of any person or persons other than a member or members of his family, become payable to the members of his family in equal shares :

Provided that no share shall be payable to—

(1) sons who have attained legal majority ;
(2) sons of a deceased son who have attained legal majority ;
(3) married daughters whose husbands are alive ;
(4) married daughters of a deceased son whose husbands are alive ;

if there is any member of the family other than those specified in clauses (1), (2), (3) and (4) ;

Provided further that the widow or widows, and the child or children of a deceased son shall receive between them in equal parts only the share which that son would have received if he had survived the subscriber and had been exempted from the provisions of clause (1) of the first proviso ;

(*ii*) when the subscriber leaves no family, if a nomination made by him in accordance with the provisions of rule 14 or the corresponding rule heretofore in force in favour of any person or persons subsists the amount standing to his credit in the fund or the part thereof to which the nomination relates shall become payable to his nominee or nominees in the proportion specified in the nomination.

Note (*1*).—Any sum payable under this rule to a member of a family of a subscriber vests in such member under sub-section (*2*) of section 3 of the Provident Funds Act, 1925.

Note (*2*).—When a nominee is a dependent of the subscriber as defined in clause (*c*) of section 2 of the Provident Funds Act, 1925, the amount vests in such nominee under sub-section (*2*) of section 3 of the said Act.

Note (*3*).—When the subscriber leaves no family and no nomination made by him in accordance with the provisions of rule 14 subsists, or if such nomination relates only to part of the amount standing to his credit in the Fund, the relevant provisions of clause (*b*) and sub-clause (*ii*) of clause (*c*) of sub-section (*1*) of section 4 of the Provident Funds Act, 1925, shall apply to the whole amount or the part thereof to which the nomination does not relate.

Note (*4*).—When the whole or any part of the amount standing to the credit of a subscriber becomes payable to a minor or minors, the payment of the amount shall be made in the manner indicated below:—

(*i*) If the share of a minor does not exceed Rs. 100, payment may be made without a guardianship certificate to the natural guardian of the minor or minors, or, in the absence of the natural guardian, to such person as may be considered fit by the School Board in this behalf:

Provided that the guardian or the person concerned (except in the case of a Hindu widow receiving payment on behalf of her minor children) executes a bond signed by two sureties agreeing to indemnify the School Board against any subsequent claim which may arise.

(*ii*) If the share of a minor is in excess of Rs. 100, payment may be made to the person legally entitled to receive the minor's share:

Provided that in the case of a Hindu widow of a deceased subscriber, when there is no guardian appointed by a court to receive payment on behalf of the minor children, the payment may be made to the widow on behalf of the children.

16. *Refunding to Government the grant-in-aid (with interest thereon).*—When the whole or part of the School Board's contribution (with interest thereon) towards the provident fund account of a subscriber lapses to the Board under rule 9 or 10, it shall be incumbent on the Board to refund to Government the grants-in-aid (with the interest thereon) which were received by it on this account from time to time when the contributions were paid into the subscriber's account.

Note.—The refund shall be effected by deducting the amount (on which Government grant was paid) that lapsed to the Board in a year from the total expenditure admitted for grant during that year.

17. *Payments of accumulations to be made within three months from the date of retirement or death of subscriber.*—Payments shall be made within three months from the date of retirement or death of the subscriber, and shall include interest up to the date on which payment is made; and if payment is not claimed before the expiration of the three months no interest shall accrue beyond that period.

Provided that the accumulations remaining unpaid for over six months since the date such sum became payable shall be transferred to "*Deposits*" after the 31st March of the year and treated thereafter under the ordinary rules relating to Deposits.

18. *Recovery of School Board claims from the amount standing to the subscriber's credit.*—Before any payments are made to any subscriber from the fund all sum due by him to the School Board or the Authorised Municipality, as the case may be, on any account shall be recovered by the School Board by deducting the amount due by him from the amount payable to him, but not exceeding in any case the total amount of any contributions credited by the School Board to the account of the subscriber and any interest or increment which has accrued on such contribution.

19. *Administration, management, etc.*—The fund shall be administered by the School Board, all work in connection with its management being carried on as part

of the function of the School Board. Though part of the Primary Education Fund, separate accounts of the provident fund shall be kept. The provident fund shall be subject to the annual audit by the Auditors of Government.

20. *Relaxations.*—Government may, in special cases, modify or alter these rules to suit the special circumstances of a District School Board or Authorised Municipality.

FIRST ANNEXTURE.

[*See* Rule 14 (3).]

FORMS OF NOMINATION.

I.—When the subscriber has a family and wishes to nominate one member thereof.

I hereby nominate the person mentioned below, who is a member of my family as defined in rule 13 of the School Board Provident Fund Rules, to receive the amount that may stand to my credit in the Fund in the event of my death before the amount has become payable, or having become payable has not been paid :—

Name and address of nominee.	Relationship with subscriber.	Age.

Dated this day of 19 , at

Signature of subscriber.

Two witnesses to signature—
(1)
(2)

II.—When the subscriber has a family and wishes to nominate more than one member thereof.

I hereby nominate the persons mentioned below, who are members of my family as defined in rule 13 of the School Board Provident Fund Rules, to receive the amount that may stand to my credit in the Fund, in the event of my death before that amount has become payable, or having become payable has not been paid, and direct that the said amount shall be distributed among the said persons in the manner shown below against their names :—

Name and address of nominees.	Relationships with subscriber.	Age.	Amount or share of accumulations to be paid to each.

Dated this day of 19 , at

Signature of subscriber.

Two witnesses to signature—
(1)
(2)

III.—When the subscriber has no family and wishes to nominate one person.

I, having no family as defined in rule 13 of the School Board Provident Fund Rules, hereby nominate the person mentioned below to receive the amount that may stand to my credit in the Fund, in the event of my death before that amount has become payable or having become payable has not been paid :—

Name and address of nominee.	Relationship with subscriber.	Age.

Dated the day of 19 , at

Signature of subscriber.

Two witnesses to signature—

(1)

(2)

IV.—When the subscriber has no family and wishes to nominate more than one person.

I, having no family as defined in rule 13 of the School Board Provident Fund Rules, hereby nominate the persons mentioned below to receive the amount that may stand to my credit in the Fund, in the event of my death before that amount has become payable, or having become payable has not been paid, and direct that the said amount shall be distributed among the said persons in the manner shown below against their names :—

Names and address of nominees.	Relationships with subscriber.	Age.	*Amount or share of accumulations to be paid to each.

Dated this day of 19 , at

Signature of subscriber.

Two witnesses to signature—

(1)

(2)

***Note.—This column should be filled in so as to cover the whole amount that may stand to the credit of the subscriber in the fund at any time.**

SECOND ANNEXTURE.

[*See* Rule 14 (5) and (8).]

FORMS OF CONTINGENT NOTICE OF CANCELLATION.

I.—Where nomination is in favour of one or more members of the subscriber's family.

Without prejudice to my right under sub-rule (4) of rule 14 of the School Board Provident Fund Rules to cancel the nomination made by me on

whenever I think fit, I hereby give notice that in the event of the person / any of the persons nominated thereunder predeceasing me, the said nomination shall forthwith stand cancelled.

Dated this day of 19 at

Signature of subscriber.

Two witnesses to signature :—

(1)

(2)

II.—When nomination is in favour of one or more persons not being members of the subscriber's family.

Without prejudice to my right under sub-rule (4) of rule 14 of the School Board Provident Fund Rules to cancel the nomination made by me on

whenever I think fit, I hereby give notice that in the event of the person / any of the persons nominated thereunder predeceasing me, or in the event of my hereafter acquiring a family as defined in rule 13 of the said rules, the said nomination shall forthwith stand cancelled.

Dated the day of 19 at

Signature of subscriber.

Two witnesses to signature :—

(1)

(2)

SCHEDULE N.

[*Vide* rule 194 (2) of the Bombay Primary Education Rules, 1949.]

Rules for the administration, maintenance and use of the School Board Pension Fund.

1. *Commencement and application.*—(1) These rules shall come into force from.....

(2) These rules shall apply to the employees of a District School Board or to primary school teachers of an Authorised Municipality (hereafter referred to as the said employees) who are under the rules eligible to receive pension and who under sub-rules (3) and (4) of rule 5 of the Bombay Primary Education Rules, 1924, or under sub-rule (3) of rule 193 of the Bombay Primary Education Rules, 1949, have exercised the option of remaining on a pensionary basis. The School Board shall pay pension contribution into the pension fund on behalf of the said employees :

Provided that any rules applicable to a pension fund established for the benefit of the employees before the date on which these rules come into force are hereby repealed and the said pension fund shall from and after the said date be governed by these rules in so far as such rules are applicable.

2. *Discontinuance of payment of pension contribution.*—(1) No pension contribution shall be paid into the pension fund in respect of employees who are subscribers or elect to subscribe to the provident fund established under rule 193 of the Bombay Primary Education Rules, 1949.

(2) Pension contribution paid by the School Board to Government on behalf of the said employees prior to the establishment of the pension fund shall cease to be paid to Government with effect from the date of the establishment of the pension fund. From such date, the School Board shall pay pension contribution on behalf of these employees into its pension fund.

3. *Rate of Pension Contribution.*—Contributions payable to the fund from the date of its establishment shall be at the rate of one-nineth (or $11\frac{1}{9}$ per cent.) of the sanctioned salaries of the several appointments and it shall be made monthly on the date on which the pay bills of the employees are cashed.

No person whose service has not been pensionable in the past shall be permitted to join the pension fund with retrospective effect, and no contribution in that behalf shall be made by the School Board with a view to render past services pensionable.

4. *Administration, management etc., of the pension fund.*—The pension fund shall be administered by the School Board, all work in connection with management being carried on as a part of the functions of the School Board. Separate accounts of the fund shall be kept and it shall be subject to the annual audit by the Auditors of Government.

5. *Investment and deposit of accumulated funds.*—All accumulations in the pension fund shall be deposited or invested in accordance with the provisions of section 46 of the Act.

6. *Liability.*—The District School Board or Authorised Municipality concerned shall pay, out of the pension fund established by it ; to the employees concerned the proportionate share of pension when earned, in respect of the period for which pension contribution has been credited to such pension fund. The proportionate share of pension in respect of the period for which the employees concerned served under Government or for which pension contribution was being paid to Government shall be paid from State revenues.

The proportionate share of pension payable by Government and the District School Board or Authorised Municipality, as the case may be, shall be determined by the Accountant General in accordance with the method indicated in rule 279-B of the Bombay Civil Services Rules.

7. *Payment of pension or gratuity.*—A pension shall be payable monthly in arrears on or after the first day of each month during life time, whereas a gratuity shall be paid in a single sum and not by instalments, as soon as the amount due is sanctioned by an authority competent to do so.

Note.—The employees referred to in rule 1 above will have the option of having their pensions commuted in accordance with the rules prescribed by Government from time to time for similar classes of its employees.

8. *Final absorption.*—When no liability remains on the pension fund it shall be absorbed in the general balances of the School Board after refunding to Government the latter's quota equal to the rate of the grant-in-aid made towards the fund.

Note.—The refund shall be effected by deducting the amount (on which Government grant was paid) that lapsed to the Board in a year from the total expenditure admitted for grant during that year.

9. *Submission of Establishment Returns.*—Early in April in each year, a detailed statement in respect of the permanent employees on whose behalf contribution is paid into the fund shall be prepared in the prescribed form and submitted to the Director by a District School Board and to the Authorised Municipality by the Municipal School Board as soon as possible and not later than 15th May.

10. *Relaxations.*—Government may, in special cases, modify or alter these rules to suit the special circumstances of a District School Board or Authorised Municipality.

APPENDIX A.

(*See* rule 7 of the Bombay Primary Education Rules, 1949.)

Form showing particulars regarding caste, qualifications, profession, etc., of the persons elected on the School Board of the

District Local Board
Authorised Municipality

(Date of election)

Serial No.	Name of member in full.	Interest represented.	Caste and community.	Educational qualifications.	Past and present profession or business if any.	Whether the person elected is a member of the D. L. B. or an Authorised Municipality.	Remarks.

Date. President, District Local Board. / Authorised Municipality.

APPENDIX B.

Form A.

[*Vide* rule 86 (*iii*) of the Bombay Primary Education Rules, 1949.]

Form of Census of Children.

1. Name of Village ... ...
2. Serial No. ... ...
3. Name of child with father's name and surname.
4. Language spoken by the child ...
5. Date of birth (in words) ... ...
6. Name and address of parent, guardian or other person who has actual custody of the child.
7. Name of the school attended or to which the child is to be sent.
8. If the child is physically defective and is unable to attend school the reasons therefor.

Date ———————— Signature of Enumerator ————

The birth-date entered above is, to my knowledge and belief, correct.

Date ————————

Signature or thumb impression of parent or guardian.

N.B.—In case of a child the year of whose birth is known but not the month or the date, the 1st day of June of that year should be entered as the date of birth. When both the year and the month of birth are known but not the date the 1st day of that month should be entered as the date of birth. If the date of birth has been entered in this manner the words "according to *N. B.*" should be written below the date of birth.

FORM B.

[*Vide* rule 88 (1) of the Bombay Primary Education Rules, 1949.]

Form of Census Register of all children of the ages to whom a scheme applies already attending approved schools

Register of $\frac{\text{boys}}{\text{girls}}$ in*

Serial No.	Name of boy/girl with father's name and surname, if any.	Language spoken by the child.	Date of birth.†	School year in which the child becomes liable for compulsory primary education.	School year in which the child shall cease to be liable for compulsory primary education.	Name and address of parent or guardian or other person who has actual custody of the child.	Remarks‡
1	2	3	4	5	6	7	8

*Here enter the name of the village or ward in which the child is residing.

† In the case of a child the year of whose birth is known but not the month or the date, the first of June of that year should be entered as the date of birth. When both the year and the month of birth are known but not the date the 1st day of that month should be entered as the date of birth. If the date of birth has been entered in this manner the words "according to foot-note" should be writ ten below the date of birth.

‡ Here the name of the school to which the child is to be sent should be entered or if the child is exempted a note to that effect should be made.

FORM C.

[*Vide* rule 88 (1) of the Bombay Primary Education Rules, 1949.]

Form of the list of all children of the ages to whom a scheme applies not attending any approved school.

List of $\frac{\text{boys.}}{\text{girls.}}$

Serial No.	Name of boy/girl with father's name and surname, if any.	Language spoken by the child.	Date of Birth.	School year in which the child becomes liable for compulsory primary education.	School year in which the child shall cease to be liable for compulsory primary education.	Name and address of parent or guardian or other person who has the custody of the child.	Remarks.
1	2	3	4	5	6	7	8

FORM D.

[*Vide* rule 92 of the Bombay Primary Education Rules, 1949.]

Form of Attendance Notice.

No.

To

_____

_____

_____

Sir/Madam,

As your son/daughter/ward will attain/attained the age of 6 years on , you are required under the provisions of section 32* of the Bombay Primary Education Act, 1947, to see that he/she attends ———————— school regularly from ————————. If you wish him/her to attend a school other than the above you should apply to me stating the school which you wish him/her to attend. If you consider that you have a reasonable excuse under section 33* of the Act for not sending your son/daughter/ward to school you should apply to me within one month from the date of this notice showing the cause why he/she should be exempted from attending school.

Dated ———————— Member,

_____

Administrative Officer, } Authorised by the School Board.

_____

Officer of the School Board.

* Sections 32 and 33 should be reprinted on the reverse of this Notice.

FORM E.

(*Vide* Rule 97 of the Bombay Primary Education Rules, 1949.)

Form of Attendance Order.

(Counterfoil)

No.

Attendance Order.

To

———————————

———————————

Sir/Madam,

Whereas under the Attendance Notice No.————————dated the————————you were required under the provisions of section 32 of the Bombay Primary Education Act, 1947, to see that your son/daughter/ward attends———— school regularly on and from————————;

And where as you have failed to cause your son/daughter/ward to attend the school mentioned in the said notice or any other approved school;

And whereas you have not also given any reasonable excuse within the meaning of section 33 of the said Act for failure to cause your son/daughter/ward to attend an approved school;

And whereas the————————School Board,————————has authorised me under sub-section (*2*) of section 34 of the said Act to issue this order;

Now, therefore, in exercise of the powers conferred by section 34 of the said Act, I hereby direct you to cause your son/daughter/ward to attend an approved school regularly on and from————————;

Take notice that in the event of failure to comply with the provisions of this order, legal steps as prescribed under section 35 of the said Act will be taken against you.

Dated ————————

————————Member of the School Board.

————————Administrative Officer.

————————Officer of the School Board.

Received a copy of the above order.

Date ————————

Signature or thumb impression of the parent,

MO-III Bk H 160—97

FORM E—*contd.*

No.

Attendance Order.

To

_____

_____

Sir/Madam,

Whereas under the Attendance Notice No._____dated the_____ _____you were required under the provisions of section 32 of the Bombay Primary Education Act, 1947, to see that your son/daughter/ward attends_____ school regularly on and from _____;

And whereas you have failed to cause your son/daughter/ward to attend the school mentioned in the said notice or any other approved school;

And whereas you have not also given any reasonable excuse within the meaning of section 33 of the said Act for failure to cause your son/daughter/ward to attend an approved school;

And whereas the_____School Board,_____ has authorised me under sub-section (2) of section 34 of the said Act to issue this order;

Now, therefore, in exercise of the powers conferred by section 34 of the said Act, I hereby direct you to cause your son/daughter/ward to attend an approved school regularly on and from_____;

Take notice that in the event of failure to comply with the provisions of this order, legal steps as prescribed under section 35 of the said Act will be taken against you.

Dated _____

_____Member of the School Board.

_____Administrative Officer.

_____Officer of the School Board.

FORM F.

(*Vide* Rule 98 of the Bombay Primary Education Rules, 1949.)

Form of complaint under Section 35 (2) of the Bombay Primary Education Act, 1947.

IN THE COURT OF THE ———————— CLASS MAGISTRATE ————————

————————————————————————————————

Village Bench of ————————————

————————————————————— PERSON AUTHORISED BY THE DISTRICT MAGISTRATE.

Mr. ————————
Adult,
Administrative Officer,
————————School Board.
————————————
Officer authorised by
the Administrative Officer,
————————School Board } COMPLAINANT ;

versus

Mr. ————————
Adult, resident of
village, ———————— } ACCUSED.

COMPLAINT UNDER SECTION 35 OF THE BOMBAY PRIMARY EDUCATION ACT, 1947.

The complainant begs to state that :

1. The accused is a resident of ———————— village / Ward or Peth in the area of District School Board / Authorised Municipality of ————————————— ;

2. Compulsory primary education has been introduced in this village / Ward or Peth with the sanction of Government for Boys and girls / girls of the age-group of ———— from ————————— (*vide* G. R., Education and Industries Department No. dated).

3. The age of the accused's $\frac{\text{son}}{\text{daughter}}$ ———————— is ——— years. A certificate regarding his/her date of birth is attached. The scheme of compulsion, therefore, applies to the accused's $\frac{\text{son}}{\text{daughter}}$
ward

4. The accused was accordingly served with an Attendance Notice requiring him to see that his $\frac{\text{son}}{\text{daughter}}$ ———— attended ———————— ———————school regularly from ————————.

5. The accused did not comply with the provisions of that notice nor did he put forth any reasonable excuse for failure to cause his $\frac{\text{son}}{\text{daughter}}$ to attend an approved school. Thereupon the accused was served with an Attendance Order under section 34 (*1*) of the Bombay Primary Education Act, 1947, to cause his $\frac{\text{son}}{\text{daughter}}$ ward to attend ———————— school regularly on and from ————————. The accused has also failed to comply with the provisions of the Attendance Order.

6. The accused has therefore committed an offence under section 35 of the Bombay Primary Education Act, 1947.

7. It is prayed that the accused be dealt with according to law and the maximum penalty as prescribed for in section 35 (*1*) of the Bombay Primary Education Act, 1947, may be imposed on the accused.

Date ————————.

Place ————————

Administrative Officer,

District School Board
Municipal School Board

————————

————Officer authorised by
the Administrative Officer.

———

Documents filed

(1)

(2)

FORM G.

(*Vide* Rule 84 of the Bombay Primary Education Rules, 1949.)

Rough estimate of the cost involved on account of the introduction of Compulsory Primary Education.

1. Name of District School Board / Authorised Municipality

2. Date of the introduction of compulsion—
   (*a*) Whether compulsion has already been introduced and, if so, from what date, (give also the number and date of the Government Resolution sanctioning the scheme).

   (*b*) The date from which compulsion is proposed to be introduced or extended.

3. Children to whom compulsion will apply—
   (*a*) Whether the compulsion already introduced is for boys or girls or for both and the age groups of the children under compulsion.

   (*b*) Whether the compulsion proposed to be introduced or extended will apply to boys or girls or to both.

   (*c*) Age groups of children proposed to be brought under compulsion.

	First year 194 –195	Second year 195 –195	Third year 195 –195	Fourth year 195 –195	Fifth year 195 –195
Age Groups ..					

	Authorised Municipalities.	Non-Authorised Municipalities.	Villages.
4. The Area of compulsion—			
(*a*) Area in which compulsion has already been introduced—			
(*i*) Places having population of 5,000 and over.			
(*ii*) Places having population of 3,000 to 4,999.			
(*iii*) Places having population of 1,000 to 2,999.			
(*iv*) Places having population of 700 to 999.			
(*v*) Places having population of 400 to 699.			
(*vi*) Places having population less than 400.			
Total ..			

	Authorised Municipalities.	Non-Authorised Municipalities.	Villages.
(*b*) Area in which compulsion is proposed to be introduced or extended (*vide* Statement I)—			
(*i*) Places with population of 5,000 and over.			
(*ii*) Places with population of 3,000 to 4,999.			
(*iii*) Places with population of 1,000 to 2,999.			
(*iv*) Places with population of 700 to 999.			
(*v*) Places with population of 400 to 699.			
(*vi*) Population less than 400 ..			
Total ..			

	Authorised Municipalities.		Non-Authorised Municipalities.		Villages.	
	Male.	Female.	Male.	Female.	Male.	Female.
5. Population of the area of compulsion—						
(*a*) Total population of the area according to the last census.						
(*b*) Population covered by the Scheme of compulsion already introduced.						
(*c*) Population already exempted in the area i.e. (*a*) minus (*b*).						
(*d*) Population proposed to be exempted now.						
(*e*) Net population to be covered by the scheme of compulsion i.e. (*c*) minus (*d*).						

	Authorised Municipalities.		Non-Authorised Municipalities.		Villages.	
	Boys.	Girls.	Boys.	Girls.	Boys.	Girls.
6. Children in the area of compulsion—						
(*a*) Estimated number of children of the age groups mentioned in 3 (*c*) above who are expected to be under compulsion after the completion of the scheme [i.e. 15 per cent. of the population shown under column 5 (*e*) above].						
(*b*) Total number of children attending primary schools already—						
(*i*) of age groups 6 to 11 ..						
(*ii*) of other ages						
(*c*) Estimated number of additional children to be brought under compulsion [i.e. columns 6 (*a*) minus column 6 (*b*)].						

	Authorised Municipalities.	Non-Authorised Municipalities.	Villages.
7. Total number of teachers required—			
(a) Estimated number of teachers required for the children shown in column 6 (a).			
(b) Number of teachers already in service in the area of compulsion in—			
(i) District School Board or Authorised Municipal Schools.			
(ii) Other approved schools			
(c) Total number of additional teachers required i.e. column 7 (a) minus column 7 (b).			

	Authorised Municipalities.		Non-Authorised Municipalities.		Villages	
	Immediate cost.	Ultimate cost.	Immediate cost.	Ultimate cost.	Immediate cost.	Ultimate cost.
8. Total estimated annual recurring cost—						
(a) On account of additional teachers on the basis of the average cost of pay scales.						
(b) On account of other items of expenditure which might be taken to be equal to the cost provided in (a) above.						
(c) On account of dearness allowance to the additional staff required (with details).						
Total recurring cost ..						
9. Total estimated non-recurring cost ..						
10. Total estimated recurring and non-recurring cost— i.e. column 8 plus 9						
11. Cost to Government—						
(a) Recurring						
(b) Non-recurring						
Total ..						

Date

Administrative Officer, District School Board, / Municipal School Board,

Chairman, District School Board, / Municipal School Board,

The above rough estimate of the additional cost on account of the introduction of compulsory education has been approved by the Municipality and the Municipality has also agreed to bear its share of the additional cost in its resolution No.....dated.....a copy of which is enclosed.

President,

Date..... Authorised Municipality of.....

FORM H.

(*Vide* Rule 90 of the Bombay Primary Education Rules, 1949.)

Statement I giving in abstract the particulars of the Scheme of Compulsion.

1. Name of District School Board / Authorised Municipality

	Number of Villages.	Number of Non-Authorised Municipalities.	Authorised Municipalities.
2. Whether compulsion has already been introduced— If so,			
(1) the date of the introduction of compulsion for the first time.			
(2) the area of compulsion already introduced (*vide* statement II).			
(3) the population of the area of compulsion (*vide* Statement II).			
(4) whether compulsion applied to boys, girls or to both.			
(5) the age groups of children already under compulsion.			
(6) Number and dates of Government Orders sanctioning the schemes of compulsion.			
3. Whether compulsion is proposed to be introduced for the first time or to be extended— If so,			
(*i*) the date from which compulsion is prepared to be introduced or extended.			
(*ii*) the area to which compulsion will apply for the first time or will be extended (*vide* statement II).			
(*iii*) the population of the area of compulsion (*vide* statement II).			
(*iv*) whether compulsion will apply or will be extended to boys, girls or both.			
(*v*) the age groups of children proposed to be brought under compulsion during the first year.			
(*vi*) the age groups of children proposed to be brought under compulsion from year to year during five years.			

	1st Year 19 –	2nd Year 19 –5	3rd Year 19 –5	4th Year 19 –5	5th Year 19 –5
Age groups of children—					
Boys					
Girls					

4. Area of compulsion and its population—

	Area under compulsion already.		Area proposed to be brought under compulsion for the first time or to which compulsion is proposed to be extended.	
	Number of places.	Their population.	Number of places.	Their population.
(*a*) Authorised Municipality ..				
(*b*) Non-authorised Municipalities—(give names of each)				
(1)				
(2)				
(3)				
(4)				
Total ..				
(*c*) Other places (*vide* Statement II) with a population of—				
(*i*) 5,000 and over				
(*ii*) 3,000 to 4,999				
(*iii*) 1,000 to 2,999				
(*iv*) 700 to 999				
(*v*) 400 to 699				
(*vi*) Less than 400				
Total Number of places ..				

	Villages.		Non-Authorised Municipalities.		Authorised Municipalities.	
	Boys.	Girls.	Boys.	Girls.	Boys.	Girls.
5. Pupils in the areacpulsion—						
(*a*) No. of children atteof dintag scooat th time of census (*vide* Stehm Columns 10 and 11)—						
(*i*) of age groups 6 to 11 years—						
in public Primary schools ..						
in private Primary schools ..						
Total No. of children of ages 6 to 11.						
(*ii*) of other ages—						
in public Primary schools ..						
in private Primary schools ..						
Total No. of children of other ages.						
(*a*) Grand total of all children attending schools.						
(*b*) Total No. of children of the age groups mentioned against paragraph 3 (*v*) above at the time of census (*vide* Statement III Column 13)—						
Age groups* .. 7—8 ..						
(*Strike out the age-groups 8—9 .. not required).						
9—10 ..						
10—11 ..						
6—7 ..						
Total (*b*) ..						
(*c*) Total No. of children out of (*b*) above—						
(*i*) who have already been exempted (*vide* Statement III, Column 14).						
(*ii*) who are already attending schools (*vide* Statement III Column 15).						
(*iii*) who are proposed to be exempted (*vide* Statement III Column 16).						
Total (*c*) (*vide* Statement III Column 17).						

	Villages.		Non-Authorised Municipalities.		Authorised Municipalities.	
	Boys.	Girls.	Boys.	Girls.	Boys.	Girls.
(*d*) Total No. of children out of (*b*) above who are liable for compulsion but who are not attending schools already, i.e., (*b*) minus (*c*).						
(*e*) Total No. of children who will be attending schools, i.e., (*a*) plus (*d*)—						
(*i*) in public Primary schools ..						
(*ii*) in private Primary schools ..						
Total (*e*) ..						
6. Classification of children in column 5 (*e*) above—						
(*i*) *by communities*—						
(*a*) Advanced						
(*b*) Intermediate						
(*c*) Backward						
Total ..						
(*ii*) *by languages*—						
Marathi						
Gujarati						
Kannad						
Other language (to be specified) ..						
Total ..						
7. Accommodation for pupils—						
(*a*) in existing private Primary schools ..						
(*b*) in existing public Primary schools (*vide* Statement IV Column 21).						
(*c*) in buildings to be rented for existing public schools (*vide* Statement IV Column 23).						
(*d*) in new schools to be opened or taken over (*vide* Statement IV Column 24).						

	Villages.		Non-Authorised Municipalities.		Authorised Municipalities.	
	Boys.	Girls.	Boys.	Girls.	Boys.	Girls.
(*i*) Marathi Schools						
(*ii*) Gujarati Schools						
(*iii*) Kannad Schools						
(*iv*) Other language schools (to be specified).						
Grand Total* ..						

[*This total must tally with total in 5 (*e*).]

8. No. of new public schools to be opened or to be taken over (*vide* Statement VII)—

Marathi						
Gujarati						
Kannad						
Other language (to be specified) ..						
Total ..						

9. No. of teachers required—

(*a*) Total No. of teachers required for pupils in public schools shown against 5 (*e*) above at 1 teacher for 40 pupils (*vide* Statement V Column 29).						
(*b*) Total No. of teachers sanctioned for existing schools [*vide* Statement V Column 30(1)].						
(*c*) Total No. of additional teachers required (*vide* Statement V Column 31) for—						
(*i*) existing public schools ..						
(*ii*) proposed new public schools to be opened or for schools to be taken over.						
Total ..						

10. Other non-teaching Staff required—

Designation of the Post.	Posts already sanctioned.		Additional posts required.	
	No. of posts.	Scale of pay.	No. of posts.	Scale of pay.
(*a*) Assistant Administrative Officers ..				
(*b*) Attendance Officers—				
(*i*) Trained graduates ..				
(*ii*) Ordinary graduates				
(*iii*) Matriculates or non-graduates ..				
(*iv*) Trained Primary Teachers ..				
Total ..				
(*c*) Supervisors—				
(*i*) Trained graduates ..				
(*ii*) Ordinary graduates				
(*iii*) Matriculates or non-graduates ..				
(*iv*) Primary Teachers				
Total ..				
(*d*) Office Superintendent				
(*e*) Clerks—				
(*i*) Head Clerk				
(*ii*) Accountant				
(*iii*) Senior clerks				
(*iv*) Junior clerks				
Total ..				
(*f*) Servants in Class IV—				
(*a*) For officers				
(*b*) For School Board Office ..				
(*c*) For schools (mention designations) ..				
Total ..				

	Cost during the first year.	Annual Average recurring cost.	Non-recurring cost.
11. Total additional cost for—			
(*Vide* Statement VI)			
(*a*) Additional teachers			
(*b*) Non-teaching staff—			
(*i*) Assistant Administrative Officers ..			
(*ii*) Attendance Officers			
(*iii*) Supervisors			
(*iv*) Office Superintendents			
(*v*) Clerks			
(*vi*) Servants in Class IV ..			
Total ..			
(*c*) Rents and taxes (*vide* Statement IV)—			
(*i*) Additional rent for existing schools			
(*ii*) Rent for new schools ..			
(*iii*) Additional rent for School Board Office.			
Total ..			
(*d*) Supply of books, slates and stationery to indigent children—			
(*i*) Backward Class pupils ..			
(*ii*) Pupils of other communities ..			
(*e*) Grants-in-aid to private Primary Schools.			
(*f*) Printing of forms, circulars, etc. and Stationery (Give details separately).			
(*g*) Expenditure on census—			
(*i*) Remuneration to enumerators ..			
(*ii*) Remuneration to Supervising enumerators.			
(*iii*) Travelling allowance to enumerators and Supervising enumerators.			
(*iv*) Contingency for Stationery, etc. ..			
Total ..			
(*h*) Other expenditure, if any (items to be specified).			
(*i*) Total additional cost on account of the Scheme of compulsion.			
(*j*) Remission of fees			
(*k*) Total amount to be provided by the Authorised Municipality on account of the Scheme.			

Signature of Administrative Officer of District School Board.
Municipal School Board.

Signature of Chairman, Municipal School Board.

Signature of President, Authorised Municipality.

FORM H—*contd.*

Statement II showing the consolidation of the information regarding area, population schools under the scheme of compulsion.

Serial No.	Name of Taluka and Village or of ward of a Municipality.	Area in square miles.	Total population according to the last census.			Population to be exempted.			Net population which will be covered by scheme of compulsion (Column 4 minus Column 5).		
			Males.	Females.	Total.	Males.	Females.	Total.	Males.	Females.	Total.
1	2	3	4			5			6		

Particulars of existing Primary schools in the village.						Particulars of new public schools proposed to be opened or private schools to be taken over.						Remarks stating whether it is a new school or a private school to be taken over.
No. of Public primary Schools for			No. of private Primary Schools for			Boys.			Girls.			
Boys.	Girls.	Total.	Boys.	Girls.	Total.	Marathi.	Gujarati.	Kannad.	Marathi.	Gujarati.	Kannad.	
7			8			9						9-A

FORM H—*contd.*

Statement III showing consolidation of the information regarding classification of children coming under the scheme of compulsion.

Serial No.	Name of Taluka and Village or of ward of a Municipality.	No. of children attending *Public* Primary schools at the time of the census.						No. of children attending *Private* Primary schools at the time of census.						Age groups of children to whom the scheme will apply.
		of 6–11 years of age.			of other ages.			of 6–11 years of age.			of other ages.			
		Boys.	Girls.	Total.	Boys.	Girls.	Total.	Boys.	Girls.	Total.	Boys.	Girls.	Total.	
1	2	10						11						12

Total No. of children of the age group shown in the preceding column according to census.			Total Number of children shown in Column 13.									Total No. of Additional children not attending schools to be brought to school under compulsion (Column 13 minus Column 17).			Total No. of children who will be attending.	
			Who have already been exempted.		Who are already in schools.		Who are proposed to be exempted now.		Total.							
Boys.	Girls.	Total.	Boys.	Girls.	Boys.	Girls.	Boys.	Girls.	Boys.	Girls.	Boys.	Girls.	Total.		Public Primary Schools (Column 10 plus Column 18).	Private Primary Schools (Column 11).
13			14		15		16		17		18				19	

FORM H—*contd.*

Statement IV showing consolidation of information regarding accommodation and rent required to be paid under the scheme of compulsion.

Serial No.	Name of Taluka and Village or of ward or of a Municipality.	Total Number of children who will have to be provided in public Primary schools (*vide* Column 19).	Number of children out of those in column 20 who will be provided in the existing public schools.				Amount of rent paid at present per annum for rented buildings.
			Buildings belonging to the Board.	In Rented buildings.	In Rent Free Buildings.	Total.	
1	2	20	21				22

Number of children for whom additional accommodation will have to be provided (Column 20 minus Column 21).		In New Public Schools to be opened or to be taken over.					Additional rent required to be paid per annum for additional accommodation.	
Existing public schools	New Public schools opened or taken over.	Marathi.	Gujarati.	Kannad.	Other language to be specified.	Total.	For existing public schools.	For new schools proposed to be opened.
23		24					25	26

FORM H—*contd.*

Statement V showing consolidation of the information regarding the classification of children by communities and languages and the number of teachers required.

Serial No.	Name of Taluka and Village or of ward of a Municipality.	Classification of children in Column 19.													
		By Communities.								By Languages					
		Advanced.		Intermediate.		Backward.		Total.		Marathi.		Gujarati.		Kanad.	
		Boys.	Girls.	Boys.	Girls.	Boys.	Girls.	Boys.	Girls.	Boys.	Girls.	Boys.	Girls.	Boys.	Girls.
1	2	27								28					

Classification of children in column 19—*contd.* By Languages—*contd.*				Total No. of teachers required for pupils in column 21 at one teacher for 40 pupils.	Total No. of teachers sanctioned in the existing.		Total No. of additional Teachers required (Column 29 minus Column 30).		
Other Languages to be specified.		Total.							
Boys.	Girls.	Boys.	Girls.		(1) Public Schools.	(2) Private Schools.	Existing Public Schools	The new proposed Public Schools.	Total.
28—*contd.*				29	30		31		

FORM H—*contd.*

Statement VI showing details of the additional cost on account of the additional teaching and non-teaching staff required under the scheme of compulsion.

Designation of the post.	No. of additional posts required.	Scales of pay.	Cost during the first year.						
			Pay.	Provident Fund.	Travelling Allowance.	Contingencies.	Service Postage.	Other Allowances.	Total.
(i) Primary teachers ...									
(ii) Assistant Administrative Officers.									
(iii) Attendance Officers ...									
(iv) Supervisors ...									
(v) Office Superintendents.									
(vi) Clerks ...									
(vii) Servants in Class IV .									
Total ...									

Average annual cost.							Non-recurring cost.
Pay.	Provident Fund.	Travelling Allowance.	Contingencies.	Service Postage.	Other Allowances.	Total.	

FORM H—*concld.*

Statement VII giving lists of children to be exempted and of new schools proposed to be opened or taken over.

List of children to be exempted.

Serial No.	Full name of child.	Sex.	Place of residence.	Reasons for exemption.

Name of villages in which new schools are to be opened or taken over.

Serial No.	Name of the village.	Kind of School if any.	Kind of new School to be opened or taken over.	Reasons justifying the opening of or taking over a new school.

FORM I

FORM

(*Vide* rule 90 of the Bombay Primary

Statement I showing the number of pupils to be

No. of children by age group.	6-7		7-8		8-9		9-10	
	Boys	Girls	Boys	Girls	Boys	Girls	Boys	Girls
4. Total No. of children of 6 to 11 years according to the Census.								
5. Total No. of children already exempted (if any).								
6. *Total No. of children of the village already attending—*								
(*a*) *Public Schools—*								
1. Marathi Boys' School.								
2. Marathi Girls' School.								
3. Gujarati Boys' School.								
6 (*a*) Total No. of children in Public Schools.								
(*b*) *Private Schools—*								
1. Marathi Boys' School.								
2. Marathi Girls' School.								
3. Gujarati Boys' School.								
6(*b*) Total No. of children attending Private Schools.								
7. Grand Total of children attending all Schools.								
8. No. of children proposed to be exempted now.*								
9. Net No. of children of school-going age to be provided for *i.e.* column 4 minus columns 5, 7 and 8.								

* Reasons for exemption of each

I.

Education Rules, 1949.)

provided under the scheme of compulsion.

10-11		Total						
Boys	Girls	Boys	Girls	1. Name of Population Centre..... (*i.e.* the Revenue Village) Taluka.....				
				2. Population of the Village (1941 Census).	Males.	Females.	Total.	
				3. Names of adjoining wadis, falias or hamlets (with population of each) included in village.				
				No. of other children *i.e.* of other ages or from other villages.		Total No. of children in school.		
				Boys	Girls	Boys	Girls	

child to be given in brief on the reverse.

Statement II showing the classification of pupils by Communities and by Languages in the village of _____ *Taluka* _____

Classification of pupils by	10. Communities.							
	Advanced.		Intermediate.		Backward.		Total.	
	Boys	Girls	Boys	Girls	Boys	Girls	Boys	Girls
(*a*) No. of children of 6 to 11 years of age already attending—								
(*i*) Public Schools								
(*ii*) Private Schools								
Total ...								
(*Vide* column 7 of Statement I.)								
(*b*) No. of children of other ages attending already—								
(*i*) Public Schools								
(*ii*) Private Schools								
Total ...								
(*c*) No. of additional children of the age groups to which compulsion will apply who will be brought to school.								
(*d*) Grand Total of (*a*), (*b*) and (*c*) ...								

(*contd. below.*)

11. Languages.

Marathi.		Gujarati.		Kannad.		Other language (to be specified).		Total.	
Boys	Girls	Boys	Girls	Boys	Girls	Boys	Girls	Boys	Girls

Statement III showing the details of accommodation proposed to be provided for ..... children under the scheme of compulsion in the village of ..... Taluka ..... .

Name and Kind of every public school in the village and of a new school proposed to be opened.	Details of existing accommodation.			
	Whether the building is rented, rent-free or owned.	No. of class rooms in each building and their floor area in square ft.	Total No. of children who can be accommodated at 8 square ft. per pupil in each building.	Total No. of children of all ages already attending public schools, *vide* column (6) (*a*).
12	13	14	15	16
Existing Public Schools.				
1				
2				
3				
4				
5				
New Public Schools to be opened.				
1				
2				
3				
4				

(*contd. below.*)

No. of additional children of age group to which the scheme applies and who will be brought to school under compulsion during the year.	Total No. of children required to be provided elsewhere *i.e.* columns 16 and 17 minus column 15.	By shift in the existing building.	No. of children out of those shown in column 18 who will be provided for		Estimated additional rent per annum.	
			by renting additional accommodation for the existing school.	by opening new schools.	for additional accommodation for existing school.	for new school to be opened.
17	18	19	20	21	22	23

Statement IV showing the existing and the additional teachers required for the Schools in the village of.....Taluka.....

Name of each school in village.	Highest standard taught. 24	Total No. of children who can be provided in the school *i.e.* total of columns 15, 19 and 20 in the case of existing schools or column 21 in the case of new schools. 25	Total No. of teachers required for the pupils in column 25 at the rate of 40 pupils per teacher. 26
Existing Public Schools.			
1.			
2.			
3.			
4.			
Total ...			
New Public Schools.			
1.			
2.			
3.			
Total ...			
Private Schools*.			
1.			
2.			
3.			
Total ...			

(*contd. below.*)

No. of existing teachers in the school.		No. of additional teachers required for the existing schools.	No. of additional teachers required for new schools.
Trained.	Qualified.		
27		28	29

* The existing No. of children in each approved School to be shown.

APPENDIX C.

FORM A.

(*Vide* rule 106 of the Bombay Primary Education Rules, 1949.)

Statement to accompany the application for recognition or grant-in-aid to a private primary school.

1.	Locality ...	
2.	Name of the Proprietor, Society or controlling body.	
3.	Date of establishment ...	
4.	No. of pupils in average attendance in each standard during the year.	
5.	Name, age, qualifications, and the departmental certificates, if any, of the Head Teacher and assistants.	
6.	Other employment, if any, of the teacher/s.	
7.	Rates of fees charged, if any ...	
8.	Name and postal address of the Managers or correspondent who will be responsible for correspondence.	
9.	Annual expenditure and how it is proposed to be met.	
10.	General remarks including whether the school intends to apply for grant-in-aid.	
	Date	
	Signature	

FORM B.

[*Vide* rule 119 (2) of the Bombay Primary Education Rules, 1949.]

Form of Agreement.

In consideration of the sum of Rs..... paid on behalf of the school board of .... to me/us as grant-in-aid in advance for the year 19 -19 for the ..... school, I/We do hereby agree to refund to the said School Board in full the amount of the said grant if for any reason the school is closed before the end of the said year or if the recognition of the school is withdrawn by the said School Board before the end of the said year for any reason which the said School Board in its absolute discretion may deem sufficient.

Dated 19 .

Place

Manager(s).

In the presence of

1.

2.

FORM C.

(*Vide* rule 6 in Schedule F.)

Agreement to be entered into between permanent teachers and managers of approved private schools.

An Agreement made the day of ..... One thousand Nine hundred and .....between..... hereinafter called the Teacher of the one part and..... .....hereinafter called the (Committee) of the other part Whereby it is agreed by and between the parties as follows :—

1. That the Teacher shall devote his whole time and attention to the duties of his office and discharge them effectively, diligently and to the best of his ability and shall abide by the rules of conduct and general conditions of service framed by the management and shall not engage in any other employment and shall not (except in case of accident or sickness certified by competent medical authority) absent himself from duties without having first obtained the permission of the Head of the School:

[But] if he absents himself from the said service without first obtaining permission or in case of sickness, without furnishing the requisite medical certificate, as aforesaid, he shall forfeit all claims to any pay during such absence.

2. That the (Committee) shall pay the Teacher for so long as he shall remain in service and actually perform his duties as remuneration for his services a salary of Rupees.

(Rs.) per month during the first year and Rupees
(Rs.) per month during the second year and Rupees
(Rs.) per month in subsequent years.

3. That the Teacher shall subscribe to the Provident Fund in accordance with the rules in force regulating the same.

4. That this agreement may be terminated at any time by either party giving to the other months' notice in writing and on the expiration of the period of such notice this agreement shall be determined.

5. That in the event of misconduct on the part of the Teacher or breach by him of any of the conditions herein specified the (Committee) is entitled at any time after due inquiry to dispense with the services of the Teacher without notice.

6. The Head teacher of the school may suspend the Teacher pending inquiry into any charge brought against him.

7. All communications of whatever nature from the Teacher to the (Committee) shall be forwarded through the Head Teacher of the School.

In Witness Whereof—
of and on behalf of
the
and
have hereunto set their
hands the day and the year
first before written.

Signed by the said
in the presence of }

Signed by the said
in the presence of }

APPENDIX D.

(*Vide* rule 153 of the Bombay Primary Education Rules, 1949.)

THE BUDGET ESTIMATES OF THE DISTRICT SCHOOL BOARD,
——————————FOR THE YEAR 19 –19 .

Section A.

Estimates of receipts of the District School Board.....for the year 19 –19 .

Major and Minor Head.	Actuals for the preceding year.	Budget estimates for the current year.	Estimates for the next year 19 –19		
			Administrative Officer's estimates.	District School Board's estimates.	Sanctioned estimates.
1	2	3	4	5	6
	Rs.	Rs.	Rs.	Rs.	Rs.
I. Contributions—					
(*a*) Contributions from District Local Board under section 41 (*1*) (*vide* Annexture A).					
(*b*) Contributions from non-authorised Municipalities under section 41 (*2*) (*vide* Annexture B).					
II. Income from fees, fines, etc.—					
(*a*) School fees					
(*b*) Fines and penalties					
III. Income from endowments and Trust Funds for Primary Education (*vide* Annexture C).					
IV. Deposits and Advances—					
(*a*) Advances repaid					
(*b*) Deposit and earnest money ...					
V. Miscellaneous receipts—					
(*a*) Cash recoveries of overpayments in previous years.					
(*b*) Sale proceeds of old stores ...					
(*c*) Popular contribution other than contributions for construction of new school building.					
(*d*) Other receipts to be specified ...					
VI. Government grant					
Grand Total ...					

Section B.

Estimates of the expenditure of the District School Board.....for the year 19 –19 .

Major and Minor Head.	Sanctioned strength.		Actuals for the previous year (19 - 19).	Budget estimates for the current year (19 - 19).	Budget estimates for the next year		
	Permanent.	Temporary.			Administrative Officer's estimates.	District School Board's estimates.	Sanctioned estimates
1	2	3	4	5	6	7	8
			Rs.	Rs.	Rs.	Rs.	Rs.
A—ITEMS OF SANCTIONED EXPENDITURE.							
1. RECURRING EXPENDITURE.							
(1) *General Establishment (vide Annexure D).*							
(a) Pay of Staff—							
(i) Assistant Administrative Officers.							
(ii) Supervisors							
(iii) Attendance Officers ...							
(iv) Engineering staff ...							
(v) Clerks							
(vi) Teachers							
(vii) Inferior servants—							
(a) attached to School Board office and officers.							
(b) Other inferior servants ...							
(viii) Other staff (to be specified)...							
Total of (a) ...							
(b) Allowances of Establishment (*vide* Annexure D)—							
(i) Assistant Administrative Officers.							
(ii) Supervisors ..							
(iii) Attendance officers ..							
(iv) Engineering staff ..							
(v) Clerks							
(vi) Teachers							
(vii) Inferior servants—							
(a) attached to School Board office and officers.							
(b) Other inferior servants							
(viii) Other staff (to be specified)							
Total of (b) ..							

Major and Minor Head.	Sanctioned strength.				Budget estimates for the next year.		
	Permanent.	Temporary.	Actuals for the previous year (19 - 19).	Budget estimates for the current year (19 - 19).	Administrative Officer's estimates.	District School Board's estimates	Sanctioned estimates.
1	2	3	4	5	6	7	8
			Rs.	Rs.	Rs.	Rs.	Rs.
A—ITEMS OF SANCTIONED EXPENDITURE—*contd.*							
1. RECURRING EXPENDITURE—*contd.*							
(1) *General Establishment* (*vide* Annexture D)—contd.							
(*c*) Contingencies for Establishment (*vide* Annexture D)—							
(*i*) Assistant Administrative Officers.							
(*ii*) Supervisors ..							
(*iii*) Attendance Officers ..							
(*iv*) Engineering staff ..							
(*v*) Other staff (to be specified)..							
Total of (*c*) ..							
Total of (1) i.e. (*a*), (*b*) and (*c*) ..							
(2) *Recurring expenditure in School Board Office.*							
(*a*) Rents, rates and taxes (*vide* Annexture F).							
(*b*) Current and ordinary repairs ...							
(*c*) Furniture and equipment ...							
(*d*) Postage and telegram charges ...							
(*e*) Stationery and Printing of forms.							
(*f*) Office contingencies—							
(*i*) Fixed contingencies, water supply, conservancy charges, other charges.							
(*ii*) Miscellaneous contingencies.							
Total of (2) ...							

Major and Minor Head.	Sanctioned strength.		Actuals for the previous year (19 - 19).	Budget estimates for the current year (19 - 19).	Budget estimates for the next year.		
	Permanent.	Temporary.			Administrative Officer's estimates.	District School Board's estimates.	Sanctioned estimates.
1	2	3	4	5	6	7	8
			Rs.	Rs.	Rs.	Rs.	Rs.
A—ITEMS OF SANCTIONED EXPENDITURE—*contd.*							
1. RECURRING EXPENDITURE—*contd.*							
(3) *Recurring expenditure on Primary Schools.*							
(*a*) **Rents, rates and taxes (*vide* Annexture F).**							
(*b*) **Current and ordinary repairs ...**							
(*c*) **Furniture, equipment, forms and stationery.**							
(*d*) **Postage and telegram charges ...**							
(*e*) **Stipends in training institutions...**							
(*f*) Scholarships in primary schools ...							
(*g*) Books, maps, etc., for primary schools.							
(*h*) Free supply of books and slates for indigent pupils.							
(*i*) Travelling allowance to teachers.							
(*j*) Contingencies for schools—							
(*i*) Fixed contingencies, water supply, conservancy charges, other charges.							
(*ii*) Miscellaneous contingencies							
(*k*) Award of prizes							
(*l*) Miscellaneous expenditure to be specified—							
(*i*) Expenditure on physical education.							
(*ii*) Superintendence allowance in boarding schools.							
(*iii*) Medical inspection etc. ...							
Total of (3) ...							

Major and Minor Head.	Sanctioned strength.		Actuals for the previous year (19 – 19).	Budget estimates for the current year (19 – 19).	Budget Estimates for the next year.		
	Permanent.	Temporary.			Administrative Officer's estimates.	District School Board's estimates.	Sanctioned estimates.
1	2	3	4	5	6	7	8
			Rs.	Rs.	Rs.	Rs	Rs.
A—ITEMS OF SANCTIONED EXPENDITURE—*contd.*							
1. RECURRING EXPENDITURE—*concld.*							
(4) *Pensions and Gratuities.*							
(*a*) Pension							
(*b*) Gratuities							
(*c*) Contribution to Provident Fund...							
(*d*) Leave contribution							
Total of (4) ...							
(5) *Miscellaneous payments.*							
(*a*) Travelling allowance to School Board members.							
(*b*) Other payments to be specified ...							
Total of (5) ...							
(6) *Grants-in-aid to approved private schools.*							
Total estimates of recurring expenditure, i.e. of (1), (2), (3), (4), (5) and (6).							
2. NON-RECURRING EXPENDITURE.							
(1) *On School Board Office.*							
(*a*) Civil works ... ... (Special repairs or construction of office building).							
(*b*) Miscellaneous unforeseen charges...							
Total of (1) ..							

Major and Minor Head.	Sanctioned strength.		Actuals for the previous year (19 - 19).	Budget estimates for the current year (19 - 19).	Budget Estimates for the next year.		
	Permanent.	Temporary.			Administrative Officer's estimates.	District School Board's estimates.	Sanctioned estimates.
1	2	3	4	5	6	7	8
B—ITEMS OF AUTHORISED EXPENDITURE—*contd.*			Rs.	Rs.	Rs.	Rs.	Rs.
1. RECURRING EXPENDITURE—*contd.*							
(1) *General Establishment (vide Annexture D)*—contd.							
(*c*) Contingencies for Establishment (*vide* Annexture D)—							
(*i*) Assistant Administrative Officers.							
(*ii*) Supervisors ...							
(*iii*) Attendance officers ...							
(*iv*) Engineering staff ...							
(*v*) Other staff (to be specified).							
Total of (*c*) ...							
Total of (1), i.e. (*a*), (*b*) and (*c*) ...							
(2) *Recurring expenditure in School Board Office.*							
(*a*) Rents, rates and taxes (*vide* Annexture F).							
(*b*) Current and ordinary repairs ...							
(*c*) Furniture and equipment ...							
(*d*) Postage and telegram charges.							
(*d*) Office contingencies ...							
(*e*) Fixed contingencies, water supply, conservancy charges and other charges.							
(*f*) Fluctuating contingencies ...							
Total of (2) ...							

Major and Minor Head.	Sanctioned strength.		Actuals for the previous year (19 – 19).	Budget estimates for the current year (19 – 19).	Budget Estimates for the next year.		
	Permanent.	Temporary.			Administrative Officer's estimates.	District School Board's estimates.	Sanctioned estimates.
1	2	3	4	5	6	7	8
			Rs.	Rs.	Rs.	Rs.	Rs.
1—RECURRING EXPENDITURE—*contd.*							
(3 *Recurring Expenditure on Primary Schools.*							
(*a*) Rent, rates and taxes (*vide* Annexture F).							
(*b*) Current and ordinary repairs ...							
(*c*) Furniture, equipment, forms and stationery.							
(*d*) Postage and telegram charges ...							
(*e*) Stipends in training institutions ..							
(*f*) Scholarships in Primary schools ...							
(*g*) Books, maps, etc., for Primary schools.							
(*h*) Free supply of books and slates for indigent pupils.							
(*i*) Travelling allowance to teachers ..							
(*j*) Contingencies for schools—							
(*i*) Fixed contingencies, water supply, conservancy charges, other charges.							
(*ii*) Miscellaneous contingencies.							
(*k*) Award of prizes							
(*l* Miscellaneous expenditure to be specified—							
(*i*) Expenditure on physical education.							
(*ii*) Superintendence allowance in boarding schools.							
(*iii*) Medical inspection, etc. ...							
Total of (3) ...							

Major and Minor Head.	Sanctioned strength.		Actuals for the previous year (19 - 19).	Budget estimates for the current year (19 - 19).	Budget Estimates for the next year.		
	Permanent.	Temporary.			Administrative Officer's estimates.	District School Board's estimates.	Sanctioned estimates.
1	2	3	4	5	6	7	8
			Rs.	Rs.	Rs.	Rs.	Rs.
1—RECURRING EXPENDITURE—*concld.*							
(4) *Pensions and Gratuities.*							
(*a*) Pensions							
(*b*) Gratuities							
(*c*) Contribution to Provident Fund..							
(*d*) Leave contribution ...							
Total of (4) ...							
(5) *Miscellaneous Payments.*							
(*a*) Travelling allowance to School Board members.							
(*b*) Other payments to be specified ...							
Total of (5) ...							
(6) Grants-in-aid to approved private schools.							
Total estimates of recurring expenditure, i.e. of (1), (2), (3), (4), (5) and (6).							
2—NON-RECURRING EXPENDITURE.							
(1) *Expenditure on School Board Office.*							
(*a*) Civil Works (Special repairs or construction of office building).							
(*b*) Miscellaneous unforeseen charges ..							
Total of (1) ..							

Major and Minor Head.	Sanctioned strength.		Actuals for the previous year (19 – 19).	Budget estimates for the current year (19 – 19).	Budget Estimates for the next year.		
	Permanent.	Temporary.			Administrative Officer's estimates.	District School Board's estimates.	Sanctioned estimates.
1	2	3	4	5	6	7	8
			Rs.	Rs.	Rs.	Rs.	Rs.
2—NON-RECURRING EXPENDITURE —*contd.*							
(2) *Expenditure on Primary Schools.*							
(*a*) Civil works and special repairs to Board's schools.							
(*b*) Building grants to approved private schools (*vide* Annexture G).							
(*c*) Equipment and furniture for new schools.							
(*d*) Miscellaneous unforeseen charges..							
Total of (2) ...							
Total estimates of non-recurring expenditure, i.e. (1) and (2).							
3—DEPOSITS AND ADVANCES.							
(*a*) Provident Fund ..							
(*b*) Advances paid ..							
(*c*) Deposits returned ..							
(*d*) Contributions for activities connected with primary education.							
(*e*) Payment out of realisations from endowment and Trust Funds.							
Grand Total of B, i.e. (1), (2) and (3)..							
Grand Total, A and B ..							

Section C.

New Items of Expenditure

(*a*)

Abstract of expenditure on account of new items of expenditure

Serial No.	Description of the new items.	Estimated expenditure.			
		Recurring.	Non-recurring.	Total.	Ultimate annual recurring expenditure.
	Grand Total ..				

(*b*)

Details of individual new items

Item No.

Brief description :

Recurrent Rs. ... Non-recurrent Rs. ...

Total Rs. ... Ultimate annual recurrent. Rs.

Remarks : 1. (State justification for the new items.)

2. The extra cost on account of the new items will be as detailed below :—

Budget head.	Strength of staff.	Cost during the budget year.	Ultimate annual cost.

Annexture A.

Statement showing the details of the contribution payable in the year 19 –19 by the District Local Board, under section 41 (1) of the Act.

Particulars	* Actuals for 19 –19	† Actuals for 19 –19	‡ Budget estimate for 19 –19	§ Estimates for 19 19		Remarks.
				Administrative Officers' estimates.	Director of Public Instruction's estimates.	
1	2	3	4	5	6	7
(1) Income from local funds cess at pies in the rupee.						
(2) Income from other sources (to be specified) at pies in the rupee ..						
Grand Total ..						

* Enter figures for the last but one budget year.
† Enter figures for the last budget year.
‡ Enter figures for the current budget year.
§ Enter figures for the ensuing budget year.

ANNEXTURE B.

Statement showing the contribution payable by the non-authorised Municipalities to the District School Board ..... under section 41 (2) of the Act for the year 19 –19 .

Serial No.	Name of the non-authorised Municipality.	Income from the fixed proportion of rateable value of properties.	Income from funds.	Other moneys and donations.	*Actual for 19 -19
1	2	3	4	5	6
	Grand Total ..				

* Enter figures for the last but one budget year.

Serial No.	Name of the non-authorised Municipality.	†Actuals for 19 –19	‡Budget estimates for 19 –19	Administrative Officer's estimate	District School Board's estimate.
1	2	7	8	9	10
	Grand Total ...				

† Enter figures for the last budget year.
‡ Enter figures for the current budget year.

ANNEXTURE C.

Statement showing the income of the District School Board ..... for 19 –19 from Endowments and Trust Funds.

Serial No.	Name of the Endowment or Trust Fund.	Number and date of orders sanctioning the Endowment or Trust Fund.	Income for the preceding year (19 –19).

Serial No.	Name of the Endowment or Trust Fund.	Estimates of the current year (19 –19)	Estimates for the next year (19 –19).		
			Administrative Officer's estimates.	District School Board's estimates.	Sanctioned estimates.

ANNEXTURE D.

Statement showing details of pay, allowances and contingencies of the $\frac{\textit{sanctioned}}{\textit{authorised}}$ *staff of District School Board ..... for 19 –19 .*

Major or Minor Head.	Sanctioned strength.			Pay.			
	Permanent.	Temporary	Pay proper.	Special pay or allowances classed as pay	Leave, pension or provident fund contribution.	Leave salary and pay of substitutes.	Total.
A/B ITEMS OF SANCTIONED/ AUTHORISED EXPENDITURE.							
1. RECURRING EXPENDITURE.							
(*a*), (*b*) and (*c*) *Pay, allowances and contingencies of staff*—							
(*i*) Assistant Administrative Officers ..							
(*ii*) Supervisors ..							
(*iii*) Attendance Officers ..							
(*iv*) Engineering staff ..							
(*v*) Clerks ..							
(*vi*) Teachers ..							
(*vii*) Inferior servants—							
(*a*) for Primary schools ..							
(*b*) for Schools Board staff..							
(*viii*) Other staff to be specified .							
Total ..							

Major or Minor Head.	Allowances.					
	Travelling allowance.	Fixed conveyance allowance.	Local and house rent allowance.	Dearness allowance.	Other allowances.	Total.
A/B ITEMS OF SANCTIONED/ AUTHORISED EXPENDITURE.						
1. RECURRING EXPENDITURE.						
(*a*), (*b*) and (*c*) *Pay, allowances and contingencies of staff*—						
(*i*) Assistant Administrative Officers ..						
(*ii*) Supervisors ..						
(*iii*) Attendance Officers ..						
(*iv*) Engineering staff ..						
(*v*) Clerks ..						
(*vi*) Teachers ..						
(*vii*) Inferior servants—						
(*a*) for Primary schools ..						
(*b*) for Schools Board staff..						
(*viii*) Other staff to be specified..						
Total ..						

ANNEXTURE D—*contd.*

Major or Minor Head.	Contingencies.					Grand Total.
	Recurring.					
	Rent, rates and taxes.	Service Postage and Telegrams.	Others.	Non-recurring.	Total.	
A/B ITEMS OF SANCTIONED/ AUTHORISED EXPENDITURE.						
1. RECURRING EXPENDITURE.						
(*a*), (*b*) and (*c*) *Pay, allowances and contingencies of staff*—						
(*i*) Assistant Administrative Officers ..						
(*ii*) Supervisors ..						
(*iii*) Attendance Officers ..						
(*iv*) Engine ing staff ..						
(*v*) Clerks ..						
(*vi*) Teachers ..						
(*vii*) Inferior servants—						
(*a*) for Primary schools ..						
(*b*) for Schools Board staff..						
(*viii*) Other staff to be specified..						
Total ..						

Major or Minor Head.	Actuals for the preceding year (19 -19).	Estimates for the current year (19 -19).	Budget estimates for 19 -19 .	Sanctioned estimates.
A/B ITEMS OF SANCTIONED/ AUTHORISED EXPENDITURE.				
1. RECURRING EXPENDITURE.				
(*a*), (*b*) and (*c*) *Pay, allowances and contingencies of staff*—				
(*i*) Assistant Administrative Officers.				
(*ii*) Supervisors ..				
(*iii*) Attendance Officers ..				
(*iv*) Engineering staff ..				
(*v*) Clerks ..				
(*vi*) Teachers ..				
(*vii*) Inferior servants—				
(*a*) for Primary schools ..				
(*b*) for Schools Board staff..				
(*viii*) Other staff to be specified..				
Total ..				

ANNEXTURE E.

Statement showing the details of pay, allowances, contingencies of individual members of the $\frac{\textit{sanctioned}}{\textit{authorised}}$ *District School Board staff for 19 –19*

Serial No.	Name and designation of holder of sanctioned or authorised post.	Whether permanent or temporary.	Pay.		
			Scale of pay.	Actual pay due on 1st April next year.	Actual pay for the year at the rate in Column 5.
1	2	3	4	5	6

Serial No.	Name and designation of holder of sanctioned or authorised post.	Pay – *contd.*				
		Date of increment.	Rate of increment.	Amount of increment for the year.	Special pay or allowance classed as pay.	Total of columns 6, 9 and 10.
1	2	7	8	9	10	11

*Not to accompany the budget.

ANNEXTURE E—*concld.*

Serial No.	Name and designation of holder of sanctioned or authorised post.	Allowances.					
		Travelling Allowance.	Conveyance allowance.	Local or house rent allowance.	Dearness allowance.	Other allowances.	Total.
1	2	12	13	14	15	16	17

Serial No.	Name and designation of holder of sanctioned or authorised post.	Contingencies.					
		Rent, rates and Taxes.	Service, Postage and Telegrams.	Other recurring contingencies.	Non-recurring contingencies.	Total.	Grand Total.
1	2	18	19	20	21	22	23

*Not to accompany the budget.

ANNEXTURE F.

Statement showing the estimated expenditure of the District School Board..... for the year 19 –19 on account of rents, rates and taxes.

Serial No.	Name of the office or school building.	Estimated expenditure for the next year (19 –19).				Actuals for the previous year (19 –19).	Estimates for the current year (19 –19).
		Rents.	Rates.	Taxes.	Total.		

Serial No.	Name of the office or school building.	Estimates for the next year (19 –19).		Sanctioned estimates.
		Administrative Officer's estimates.	District School Board's estimates.	

ANNEXTURE G TO THE BUDGET.

Statement showing the details of the budget estimates of the District School Board..... for non-recurring grants to approved private schools for 19 –19 .

Serial No.	Name of the School.	BUILDING.		
		Accommodation of class rooms excluding verandahs in square feet.	No. of pupils for whom accommodation is to be provided.	Estimated expenditure sanctioned by Government.

Serial No.	Name of the School.	BUILDING—*contd.*		
		Authority sanctioning the expenditure.	Grant at ½ half of the estimated expenditure subject to a maximum of Rs. 20 per pupil.	Remarks.

APPENDIX E.

(*Vide* Rule 199 of the Bombay Primary Education Rules, 1949).

Rough estimate of the cost on account of additional expenditure on the expansion of primary education proposed to be incurred during the year 19 -19 .

Name of the District School Board or Authorised Municipality.	Total number of schools on 31st March 19			Total number of pupils on 31st March 19 in			Total number of the sanctioned staff of teachers on 31st March 1: in		
	District School Board / Authorised Municipality Schools.	Private Schools.	Total.	District School Board / Authorised Municipality Schools.	Private Schools.	Total.	District School Board / Authorised Municipality Schools.	Private Schools.	Total.
1	2	3	4	5	6	7	8	9	10

Total number of other approved staff.			Total number of new schools proposed to be opened.	Details of the additional staff proposed to be appointed.			
				Teachers.		Clerks.	
Clerks.	Inferior Servants.	Other staff, if any, to be mentioned.		Number.	Scale of pay.	Number.	Scale of pay.
11	12	13	14	15	16	17	18

APPENDIX E—*contd.*

Details of the additional staff proposed to be appointed—(*contd.*)				Total estimated annual recurring cost on			
Inferior servants.		Other staff, if any (to be specified).					
No.	Scale of pay.	No.	Scale of pay.	Pay.	Provident Fund contribution.	Rents.	Contingencies.
19	20	21	22	23	24	25	26

Total estimated annual recurring cost on		Total estimated (non-recurring cost) (with details).	Total estimated cost to Government.		Remarks.
Other items, if any, to be specified.	Total.		Recurring.	Non-recurring.	
27	28	29	30	31	32

Note.—The Resolution of the Authorised Municipality agreeing to bear its share of cost should be sent along with this Form.

APPENDIX E—*contd.*

[*Vide* rule 200 (2) of the Bombay Primary Education Rules, 1949.]

Note.—Each proposal shall be accompanied by a statement showing full details of the extra cost and if the proposal is made by an Authorised Municipality shall be accompanied by a resolution of such Municipality agreeing to bear its share of the extra cost.

FORM (1)—DETAILED PROPOSAL FOR NEW SCHOOLS OPENED OR PROPOSED TO BE OPENED.

Serial No.	Name of the school and the Taluka and Ward or Peth, as the case may be, in which the school is situated.	Population of the village (in the case of a District School Board school).	Probable date of opening the school or the date on which the school was opened, as the case may be.	Number of the pupils on the rolls or the estimated number of pupils likely to attend.					Number of additional teachers appointed or proposed to be appointed.	Remarks.
				Standard I.	Standard II.	Standard III.	Standard IV.	Total.		
1	2	3	4	5	6	7	8	9	10	11

FORM (2)—DETAILED PROPOSAL FOR THE EMPLOYMENT OF ADDITIONAL TEACHERS IN THE EXISTING SANCTIONED SCHOOLS.

A—Information regarding the number of pupils in relation to standards and teachers.

Serial No.	Designation of each teacher working in the school.	Standard or standards taught by the teacher.	Number of pupils on the rolls on 31st March 19	Number of additional teachers appointed or proposed to be appointed in the school.	Remarks.
1	2	3	4	5	6.
	One teacher schools ...				
	Two teachers schools—				
	Head Master ...				
	1st Assistant ...				
	Total ...				
	Three teachers schools—				
	Head Master ...				
	1st Assistant ...				
	2nd Assistant ...				
	Total and so on ...				
	Grand Total ...				

B—Information regarding the teaching staff.

—	Number of teachers.			Remarks.
	Trained.	Untrained.	Total.	
1	2	3	4	5
(1) Total number of teachers actually working in the existing sanctioned schools as shown in "A" above.				
(2) Total number of teachers expenditure on whose account is being admitted for grant.				
(3) Total number of additional teachers appointed or proposed to be appointed (as shown in column 5 of "A" above) expenditure on whose account is to be sanctioned for purposes of grant.				

FORM (3)—DETAILED PROPOSAL FOR THE EMPLOYMENT OF ADDITIONAL CLERKS, INFERIOR SERVANTS AND OTHER STAFF.

Serial No.	Name of the *District School Board.* Authorised Municipality.	Total number of schools on 31st March 19			Total number of pupils on 31st March 19 in		
—	—	*District School Board.* Authorised Municipality Schools.	Private Schools.	Total.	*District School Board.* Authorised Municipality Schools.	Private Schools.	Total.
1	2	3	4	5	6	7	8

Total number of teachers on 31st March 19 in			Total number of sanctioned clerks, inferior servants and other staff.			Number and the scale of pay of the additional staff appointed or proposed to be appointed.		Remarks.
District School Board. Authorised Municipality Schools.	Private Schools.	Total.	Number.	Sanctioned scale of pay.	Number and date of the Government Resolution sanctioning the staff and the scale of pay.	Number.	Scale of pay.	
9	10	11	12	13	14	15	16	17

FORM (4)—DETAILED PROPOSAL REGARDING ADDITIONAL EXPENDITURE ON RENTS OF SCHOOL BUILDINGS.

Serial No.	Name of the school with taluka Peth or ward as the case may be.	Whether the school is on the sanctioned list or not.	Nature of the building in which the school is held, *e.g.*, *District School Board.* Authorised Municipality rented building, etc.	Total number of pupils on the rolls on 31st March 194	Class room area in square feet of the school building.
1	2	3	4	5	6

Amount of rent per annum paid at present for the school.	Amount of rent admitted at present for grant.	Amount of rent disallowed for grant.	Item No. appendix, year etc. of the Audit Note in which the expenditure had been disallowed for grant.	Amount of rent per mensem certified to be reaso able by the Executive Engineer for the school building.	Remarks.
7	8	9	10	11	12

Note.—The certificate of the Executive Engineer regarding the reasonableness of rent should be sent along with this information.

THE BOMBAY PREVENTION OF FRAGMENTATION AND CONSOLIDATION OF HOLDINGS ACT, 1947 (BOM. LXII OF 1947).

G. N., R. D., No. 7031/45, dated 31st July 1948 (B. G., Pt. IV-B, p. 615).

Amended by G. N., R. D., No. 7031/45, dated 18th April 1950.

S. 37 Bombay Prevention of Fragmentation and Consolidation of Holdings Rules, 1948.

In exercise of the powers conferred by section 37 of the Bombay Prevention of Fragmentation and Consolidation of Holdings Act, 1947 (Bom. LXII of 1947), the Government of Bombay is pleased to make the following rules :—

1. These rules may called the Bombay Prevention of Fragmentation and Consolidation of Holdings Rules, 1948.

2. In these rules, unless there is anything repugnant to the subject or context,—

(*a*) " Act " means the Bombay Prevention of Fragmentation and Consolidation of Holdings Act, 1947.

(*b*) " Form " means a form appended to these rules.

(*c*) " Section " means a section of the Act.

(*d*) Words and expressions used in these rules, but not defined, shall have the meanings assigned to them in the Act.

3. After a notification under section 4 (*2*) or section 5 (*3*) is published in the *Official Gazette*, the Collector shall cause the contents thereof to be published by affixing translations of the same for three months at the Taluka Kacheri of the taluka concerned in the regional language of the taluka and at the Chavdi or other prominent place in each of the villages concerned in the regional language of such village.

4. In villages where there is no Record of Rights, the entry of all fragments shall be made as required by sub-section (*1*) of section 6 in the following form :—

Serial No.	S. No. or name of field.	Inam.			Area.	Ordinary or special Assessment and Judi.	Sub-Division No.	Area.
		Class and how long continuable.	No. in Landed Alienation Register and tenure and decision, if any.	Serial No.				
1	2	3(*a*)	3(*b*)	3(*c*)	4	5	6	7

Assessment.	Judi or Special or N. A. assessment payable.	Occupant of Khalsa Land or Holder of alienated land.	Nature and origin of title.	Other rights or encumbrances with names of right holder or encumbrancer.	References to Mutation Diary.	Remarks.
8	9	10	11	12	13	14

5. After a notification under section 15 is published in the *Official Gazette*, the Collector shall cause the contents thereof to be published by beat of drum in each of the villages concerned and by affixing translations of the same at the Taluka Kacheri of the taluka concerned in the regional language of the taluka and at the Chavdi or other prominent place in each of the villages concerned in the regional language of such village.

6. After such publication the Consolidation Officer shall visit each of the villages concerned after giving reasonable notice to the holders in such villages and shall in consultation with the Village Panchayat where one exists, or with the Village Committee specially chosen for this purpose by the Mamlatdar or Mahalkari, proceed to prepare a scheme for the consolidation of holdings. Every such scheme shall contain the following particulars :—

(*i*) A map of the village showing all the existing survey numbers and their sub-divisions and recognised roads, cart-tracks and foot-paths and areas assigned for public purposes such as burial grounds, grazing areas, or threshing floor.

(*ii*) Another village map which shall be a copy of the one mentioned in (*i*) but exhibiting in red lines or other markings how the original position will be altered after the consolidation scheme becomes operative.

(*iii*) A statement showing the names of the owners of holdings with particulars of Survey No., Hissa No., Class of land, tenure, area, assessment and encumbrances, if any (after getting the Record of Rights up-to-date).

(*iv*) A statement showing the names of the occupants or holders to whom the new consolidated holdings are allotted with particulars of Survey No., Hissa No., class of land, tenure, area, assessment and encumbrances, if any.

(*v*) A statement of valuation of lands to be exchanged showing the compensation to be given or recovered from the holders concerned.

(*vi*) A list of fragments which will be left after the consolidation scheme has been prepared and the names of owners of such fragments.

(*vii*) A brief statement as to the action, if any, taken in pursuance of sections 17 and 18.

(*viii*) A statement showing the objections and suggestions in respect of the scheme made to the Consolidation Officer by the Village Panchayat or the Village Committee, as the case may be, which were not accepted by him, together with the reasons for which they have been overruled by him.

(*ix*) Such other particulars as may be required by the Settlement Commissioner in this behalf.

7. The draft scheme of consolidation prepared under section 15, together with the maps, statements, lists, and particulars mentioned in rule 6, shall be published by the Consolidation Officer by affixing copies of the same for thirty days at the Taluka Kacheri of the taluka concerned in the regional language of the taluka and at the Chavdi or other prominent place in each of the villages concerned in the regional language of such village. It shall also be announced in each such village by beat of drum that the scheme has been so published and that objections, if any, should be submitted to the Consolidation Officer within thirty days.

8. After the scheme as confirmed is published in the *Official Gazette* under sub-section (*1*) of section 21, the Consolidation Officer shall cause it to be published by affixing copies of the same at the Taluka Kacheri of the taluka concerned in

the regional language of the taluka and at the Chavdi or other prominent place in each of the village concerned in the regional language of such village. It shall also be announced in each such village by beat of drum that the scheme has been so published.

9. Eviction of any person from any land under sub-section (*2*) of section 21 shall be made by the Consolidation Officer in the following manner by serving a notice on the person or persons in possession requiring them within such time as may appear reasonable after receipt of the said notice to vacate the land and if such notice is not obeyed by removing or deputing a subordinate to remove any person who may refuse to vacate the same.

10. The amount of compensation to be deposited by any owner under sub-section (*3*) of section 21 shall be deposited by him in the nearest Treasury and a copy of the chalan in token of credit shall be produced by him before the Consolidation Officer.

11. The right in a holding shall be reallotted by the Consolidation Officer under sub-section (*4*) of section 21 in the following manner :—

The Consolidation Officer shall announce in the village concerned through the village officers and by beat of drum and also by affixing a notice in the regional language of the village at the Chavdi or other prominent place in the village, the fact of the default committed by the person to whom the holding was allotted and of its availability for reallotment and invite applications stating the value at which the applicants may wish it to be allotted to them. After considering these applications, the Consolidation Officer shall reallot the holding to the highest bidder provided that where two or more applicants offer the same bids, the holding may, at the discretion of the Consolidation Officer, be reallotted to him whose application was received first or who owns the adjoining holding or holdings and cultivates them personally.

12. The certificate of transfer under section 24 (*1*) shall be given by the Consolidation Officer in Form A or Form B, as the case may require.

13. The period for making an application for possession under section 26 (*2*) (*b*) shall be twenty-one days from the date of the proclamation in the village by the Consolidation Officer under the said section.

14. In transferring a lease, mortgage, debt, or other encumbrance under section 29 (*1*), the Consolidation Officer shall observe the following rules, namely:—

(*i*) Where the new holding is of the same market value as the original one, the whole of the encumbrances attaching to the latter shall be transferred to the former.

(*ii*) If the new holding is of a substantially greater market value than the original, one, the lease and other encumbrances attaching to the latter shall be transferred to the former subject to the condition that the lessee shall pay to the owner such reasonable rent in respect of the new holding as might be fixed by the Consolidation Officer and that the mortgagee and other creditors will agree to such reasonable reduction in the rate of interest as may be fixed by the Consolidation Officer having regard to the substantially better security provided by the new holding.

15. In cases where a lessee, mortgagee or other encumbrancer appears to the Consolidation Officer to be entitled to possession of a holding under section 29 (*3*), the Consolidation Officer shall issue a notice to the owner to show cause within fifteen days why the lessee, mortgagee or other encumbrancer, as the case may be, should not be put into possession of his holding. If the owner fails to show cause or if the Consolidation Officer is satisfied that the cause shown by the owner is not adequate, he shall put the lessee, mortgagee or other encumbrancer, as the case may be, into possession of the holding and get the Record of Rights in respect of the holding corrected accordingly.

16. (1) All applications for permission to transfer a consolidated holding shall be made to the Collector.

(2) The transfer of a holding may be permitted by the Collector subject to the condition that the owner shall first offer it in succession and at the price fixed by the Collector to (*i*) the tenant of the holding or his heirs, (*ii*) the owner of the adjoining holding provided he cultivates it personally or to the tenant of the adjoining holding ; and (*iii*) such *bona fide* cultivators in the village as have insufficient land of their own for their maintenance.

17. The draft variation of a scheme under section 32 (*1*) shall be published by affixing copies of the same for thirty days at the Taluka Kacheri of the taluka concerned in the regional language of the taluka and at the Chavdi or other prominent place in each of the village concerned in the regional language of such village. It shall also be announced in each such village by beat of drum that the variation of the scheme has been so published and that objections, if any, should be submitted to the Consolidation Officer within thirty days.

18. In accordance with a scheme of consolidation, the Record of Rights shall be corrected in the manner laid down in Chapter XV of the Land Revenue Rules (1921).

FORM A.

(*See* rule 11.)

THE BOMBAY PREVENTION OF FRAGMENTATION AND CONSOLIDATION OF HOLDINGS ACT, 1947.

Certificate of transfer granted by the Consolidation Officer under section 24 (1) of the Act.

Whereas under the scheme for the consolidation of holdings in village..... ....., taluka....., district..... ....., which has been confirmed by the Settlement Commissioner/ State Government and which has been published at pages..... of Part..... of the *Bombay Government Gazette* dated..... under Government Notification, Revenue Department, No..... .....dated ..... as required by section 21 (*1*) of the Bombay Prevention of Fragmentation and Consolidation of Holdings Act, 1947 (Bom. LXII of 1947), the holding described in the Schedule hereto annexed has been allotted to you :

Now, this is to certify that the said holding has been transferred to you, Mr.....resident of village..... ....., taluka....., district....., in pursuance of the said scheme.

Schedule.

S. No. and name of field, if any.	Hissa No.	Area.	Assessment.	Tenure.	Encumbrances and restrictions on rights, if any.

In witness whereof the Consolidation Officer has hereto set his hand and the seal of his office this.....day of..... .....19.....

Seal.

Consolidation Officer.

FORM B.

(*See* rule 11.)

THE BOMBAY PREVENTION OF FRAGMENTATION AND CONSOLIDATION OF HOLDINGS ACT, 1947.

Certificate of transfer granted by the Consolidation Officer under section 24 (1) read with section 21 (4) of the Act.

Whereas under the scheme for the consolidation of holdings in village..... ....., taluka....., district....., which has been confirmed by the Settlement Commissioner/State Government and which has been published at pages.....of Part.....of the *Bombay Government Gazette* dated..... ....., under Government Notification, Revenue Department, No....., dated..... ....., as required by the section 21 (*1*) of the Bombay Prevention of Fragmentation and Consolidation of Holdings Act, 1947 (Bom. LXII of 1947), the holding described in the Schedule hereto annexed was allotted to Mr.....resident of village..... ....., taluka....., district..... .....; and

Whereas the said Mr.....has failed to deposit the compensation recoverable from him as required by section 21(*3*) of the said Act ; and

Whereas the right in the said holding of the said Mr..... has been allotted to you under section 21 (*4*) of the said Act after recovering the value of the said holding from you ;

Now, this is to certify that the said holding has been transferred to you, Mr.....resident of village....., taluka....., district....., in consideration for value received.

Schedule.

S. No. and name of field, if any.	Hissa No.	Area.	Assessment.	Tenure.	Encumbrances and restrictions on rights, if any.

In witness whereof the Consolidation Officer has hereto set his hand and the seal of his office this.....day of..... 19.....

Seal.

Consolidation Officer.

THE BOMBAY FORWARD CONTRACTS CONTROL ACT, 1947 (BOM. LXIV OF 1947).

G. N., F. D., No. 4233/33-D (1), dated the 1st April 1948 (B. G., Pt. IV-B, p. 164-A1). S. 3 (5)

In pursuance of the provisions of sub-section (*5*) of section 3 of the Bombay Forward Contracts Control Act, 1947 (Bom. LXIV of 1947), the Government of Bombay is pleased to recognize the East India Cotton Association for the purposes of the said Act.

G. N., F. D., No. 6898/33-D (1), dated 10th January 1949 (B. G., Pt. I, p. 113-A). S. 3 (5)

In pursuance of the provisions of sub-section (*5*) of section 3 of the Bombay Forward Contracts Control Act, 1947 (Bom. LXIV of 1947), the Government of Bombay is pleased to recognise the Bombay Bullion Association, Limited, for the purposes of the said Act.

THE POONA UNIVERSITY ACT, 1948 (BOM. XX OF 1948).

G. N., E. & I. D., No. 8376(b), dated 10th February 1949 (B. G., Pt. IV-A, p. 155A). S. 65 (3).

In exercise of the powers conferred by sub-section (*3*) of section 65 of the Poona University Act, 1948 (Bom. XX of 1948), the Government of Bombay is pleased to direct that the authorities of the Poona University constituted under sub-section (*1*) of section 65 of the said Act shall commence to exercise their functions with effect from the 10th February 1949.

THE BOMBAY REFUGEES ACT, 1948 (BOM. XXII OF 1948).

G. N., H. & L. G. D., No. 6040/33, dated 16th July 1948 (B. G., Pt. IV-B, p. 573). **S. 9 (1)**

In exercise of the powers conferred by sub-section (*1*) of section 9 of the Bombay Refugees Act, 1948 (Bom. XXII of 1948), the Government of Bombay is pleased to authorise the officers specified in column 1 of the Schedule hereto annexed for the purposes of the said sub-section within the area respectively specified against them in column 2 of the said Schedule.

Schedule.

1	2
The Executive Health Officer, Bombay Municipality. The Assistant Health Officer, Bombay Municipality.	City of Bombay.
The Commissioner of Police, Bombay ...	Greater Bombay.
The District Magistrates ... The Assistant Directors of Public Health ... The District Health Officers ...	Within their respective jurisdictions.
Medical Officers of Municipalities or, where there are no Medical Officers, Chief Officers or Secretaries of Municipalities.	Within the municipal area concerned.
The Officers in charge of Refugee Camps ... The Medical Officers of Refugee Camps ...	Within the camp concerned.

G. N., Reh. D., No. R. 133-I-B, dated 6th June 1949 (B. G., Pt IV-B, p. 1272). **S. 14**

In exercise of the powers conferred by section 14 of the Bombay Refugees Act, 1948 (Bom. XXII of 1948), the Government of Bombay is pleased to direct that the powers conferred on the State Government by sections 7 and 8 of the said Act, shall also be exercised by all the Collectors within their respective jurisdictions, and by the Director of Rehabilitation in the whole State and also by the Commissioner of Police in Greater Bombay.

G. N., Reh. D., No. R. 133-I-B., dated 6th June 1949 (B. G., Pt. IV-B, p. 1265). **S. 15 Bombay Refugees Rules, 1949.**

In exercise of the powers conferred by section 15 of the Bombay Refugees Act, 1948 (Bom. XXII of 1948), the Government of Bombay is pleased to make the following rules, namely :—

1. *Short title.*—These rules may be called the Bombay Refugees Rules, 1949.

2. *Definitions.*—In these rules, unless there is anything repugnant in the subject or context,—

(*a*) " Act " means the Bombay Refugees Act, 1948 ;

(*b*) " Form " means a form appended to these rules.

3. *Supply of registration forms.*—Copies of the form of registration shall be available at each registration centre and the registering authority or the person for the time being in charge of the registration centre shall supply a copy of it to every refugees free of charge on demand.

4. *Form of register.*—Every registering authority shall maintain a register of refugees in Form " A ".

5. *Issue of certificate of registration.*—On receipt of a form of registration duly filled in from a refugee or a person responsible for registration of a refugee, the registering authority shall enter or cause to be entered all the details in the register. If the registering authority finds that the form of registration is incomplete in any respect, it shall get the required details filled in by the person concerned and enter or cause to be entered the same in the register. The registering authority shall then issue a certificate of registration to the applicant, every member of his family or the person on whose behalf the application was made, as the case may be. In every case the certificate of registration shall be issued not later than seven days from the date of the receipt of the form of registration by the registering authority.

6. *Issue of duplicate certificate of registration.*—(1) If any certificate of registration issued under these rules is lost, destroyed or defaced, the refugee to whom it was issued or a person responsible for his registration shall make or send to the registering authority by which the certificate of registration was issued to the refugee, a report of the circumstances in which it was so lost, destroyed or defaced together with an application in writing for the issue of a duplicate copy of the certificate of registration.

(2) The registering authority shall, after making such enquiries as it may deem fit, issue to the refugee a duplicate copy of the certificate of registration lost, destroyed or defaced.

7. *Note of change of address.*—On receipt of an intimation of change of address of any refugee,—

(*a*) the registering authority by which the certificate of registration was issued to him, herein called the original registering authority, shall take a note of the change of address in the register maintained by it in Form " A ", and

(*b*) if the new address is within the jurisdiction of another registering authority, herein called the second registering authority, such registering authority shall request the original registering authority to forward to it a copy of the form of registration in respect of the refugee. The original registering authority shall thereupon forward a copy of the required form of registration to the second registering authority, after taking a note of sending such copy in the register maintained by it in Form " A ". The second registering authority shall then from the copy of the form of registration received by it enter or cause to be entered the details which may be available in respect of the refugee in the register maintained by it in Form " A " and shall enter the new address on the certificate of registration forwarded to it by or on behalf of the refugee. A like procedure shall be followed in case the refugee makes changes in his address subsequently.

8. *Manner of service of orders on refugees.*—Every order made under section 7 or 9 of the Act shall be served in the following manner, namely :—

(*a*) The order shall be served on the addressee by delivering or tendering to him a copy of it duly signed by the officer or authority issuing the same and he shall be asked to sign an acknowledgment in token of the receipt of the same.

(*b*) Where the person refuses to sign an acknowledgment or where the serving officer, after using all due and reasonable diligence, cannot find the person, the order may be served by leaving an authentic copy of it with some adult male member of his family or by affixing such copy to some conspicuous part of the premises in which he is known to have last resided or carried on business or worked for gain and by proclaiming the substance of the order by beat of drum in the locality in which such premises are situated.

(*c*) Where the service is effected under clause (*b*) the serving officer shall report to the officer or authority making the order all the circumstances under which and the manner in which the service was effected, giving the name and address of the person by whom the premises were identified and in whose presence the copy was affixed.

9. *Copy of order to refugees to reside in or remove themselves from particular camps, etc., to be sent to the registering authorities.*—(1) Where the State Government or an officer authorised by it in this behalf makes an order under section 7 of the Act, a copy of such order shall be sent by Government or such officer, as the case may be, to the registering authority within whose jurisdiction the refugee or class of refugees resided and if the refugee or class of refugees are directed to go and reside within the jurisdiction of another registering authority a copy to that other registering authority also.

(2) On receipt of a copy of the order,—

(*a*) the first named registering authority shall take a note of the order in the register maintained by it in Form " A " and if the refugee or class of refugees are directed to go and reside within the jurisdiction of another registering authority shall at the same time forward or cause to be forwarded a copy or copies of the form or forms of registration of the refugee or class of refugees, as the case may be, to the second named registering authority after taking a note of sending such copy or copies in the register ; and

(*b*) the second named registering authority shall take a note of the order in the register maintained by it in Form " A " and shall from the copy or copies of the form or forms of registration received by it enter or cause to be entered the details in respect of the refugee or refugees concerned in the said register.

10. *Facilities for vaccination and inoculation of refugees.*—(1) At each camp, facilities shall be provided by the authorities in charge of the camp for free vaccination against small-pox and inoculation against plague, cholera and typhoid.

(2) In respect of areas which are not camps, facilities for vaccination against small-pox shall be provided by the Public Health Department except in the case of those municipalities and district local boards to whom the control of vaccination has been transferred where vaccination against small-pox shall be carried out by such municipality, or local board.

Facilities for inoculation against plague, cholera and typhoid shall be provided in municipal areas by municipalities concerned, and by the Public Health Department in district local board areas.

(3) Every registering authority shall bring to the notice of the refugees registering themselves at its centre the facilities provided for vaccination and inoculation of the refugees.

(4) The vaccinator or inculator shall issue a certificate under his signature to every refugee whom he has vaccinated or revaccinated against small-pox or inoculated against plague, cholera or typhoid, that the refugee has been so vaccinated, revaccinated or inoculated, as the case may be, on the date specified in the certificate. The certificate shall be preserved by the refugee and produced for inspection when so required by any officer authorised by the State Government in this behalf.

11. *Intimation of arrival of refugees to local authorities.*—Every registering authority for any area which is not a camp shall in the beginning of each month notify in the case of a municipal area to the Medical Officer of Health, Chief Officer or Secretary of the Municipality concerned and in the case of other area to the President of the District Local Board and the District Health Officer of the district or the Assistant Director of Public Health of the Registration District concerned, the arrival of the refugees with details of their names and addresses.

12. *Submission of reports.*—(1) Every registering authority shall submit every month to the Commissioner of Police or the District Magistrate, as the case may be, within whose jurisdiction the registration centre is situated, a statement in Form " B ".

(2) The Commissioner of Police and every District Magistrate, on receipt of the statements under sub-rule (1), shall submit a consolidated statement in Form " B " for every month to the State Government.

FORM "A"

Form of Register.

(*See* rule 4.)

Serial No.	Name of the head of family in full (with surname first).	Age.	Sex.
1	2	3	4

Whether married or single.	Dependents.		Address.	
	In the State of Bombay (Names, relationship, ages, sex).	In the place which he has left (Names, relationship, ages, sex).	At present.	Prior to evacuation.
5	6	7	8	9

Details of identity documents and other papers relating to evacuation.	Period of residence at place which he has left.	Date and place of arrival in the State of Bombay.
10	11	12

Property lost or left at the place which he has left or elsewhere.			Property sold prior to evacuation.	
Movable.	Immovable.	Total value.	Details.	Price at which sold.
13	14	15	16	17

continued on next page.

Academical and technical qualifications.	Occupation, profession or trade prior to evacuation.	Monthly income prior to evacuation.	Occupation, profession or trade other than that mentioned in column 19 for which he has an aptitude.	Land taken for settling either in the State of Bombay or elsewhere in India.
18	19	20	21	22

Present means of maintenance.	Resources possessed at present.	Facilities or assistance received through official or non-official sources.	Facilities or assistance required for rehabilitation.
23	24	25	26

Settlement.			
If the refugee wishes to settle in the State of Bombay, for how long.	If outside the State of Bombay, where.	Serial No., date and of place of issue of certificate of registration.	Note of change of address.
27	28	29	30

Note of order made under section 7.	Note of sending a copy of form of registration to other registering authority.	Whether the details have been filled from a copy of form of registration received from other registering authority.	Remarks.
31	32	33	34

FORM "B".

Form of Report.

(*See* rule 12.)

Statement for the month of *19*

		No. of refugees registered at the end of the last month.	No. of refugees registered during the month under report.	Progressive total.	Remarks.
Outside Camps.	From—				
	West Punjab ...				
	N. W. F. P. ...				
	Sind ...				
	Baluchistan ...				
	Bahawalpur ...				
	East Bengal ...				
	Other places ...				
	Total ...				

		No. of refugees registered at the end of the last month.	No. of refugees registered during the month under report.	Progressive total.	Remarks.
In Camps.	From—				
	West Punjab ..				
	N. W. F. P. ..				
	Sind ..				
	Baluchistan ..				
	Bahawalpur ..				
	East Bengal ..				
	Other places ..				
	Total ..				

G. N., Reh. D., No. R. 133-I-B, dated 6th June 1949 (B. G., Pt. IV-B, p. 1272). **S. 16 (2)**

In exercise of the powers conferred by sub-section (*2*) of section 16 of the Bombay Refugees Act, 1948 (Bom. XXII of 1948), the Government of Bombay is pleased to authorise all the Collectors within their respective jurisdictions, the Director of Rehabilitation in the whole State and the Commissioner of Police in Greater Bombay to exercise the powers under the said section.

THE BOMBAY LAND REQUISITION ACT, 1948 (BOM. XXXIII OF 1948).

G. N., R. D., No. Misc. 9293, dated 24th May 1949 (B. G., Pt. IV-B, p. 1091-A).

Amended by G. N., R. D., No. Misc. 36469-P, dated 23rd March 1950.

S. 19 Bombay Land Requisition (Determination (of Compensation) Rules, 1949.

In exercise of the powers conferred by section 19 of the Bombay Land Requisition Act, 1948 (Bom. XXXIII of 1948), the Government of Bombay is pleased to make the following rules, namely :—

1. These rules may be called the Bombay Land Requisition (Determination of Compensation) Rules, 1949.

2. In these rules, unless there is anything repugnant in the subject or context,—

(*a*) " Act " means the Bombay Land Requisition Act, 1948 ;

(*b*) " Compensation Officer " means an officer authorized by the State Government in respect of any area for the purposes of sub-section (*1*) of section 8 or sub-section (*2*) of section 9 of the Act.

3. When any land is requisitioned or is continued to be subject to requisition under the Act, or when upon release from requisition the land has been deteriorated due to causes other than reasonable wear and tear or irresistible force, any person having an interest in such land may make an application to the Compensation Officer in Form A hereto annexed for claiming compensation in respect of such land.

4. (1) The Compensation Officer shall, on receipt of an application under rule 3, scrutinize the claim in detail and if having regard to the facts set out in the application and the provisions of the Act, he is of opinion that the claim made out in the application is reasonable and may be accepted, he may make an order accordingly subject to the condition that the applicant executes an agreement in Form B hereto annexed.

(2) If the Compensation Officer is of opinion that the claim made out in the application is not reasonable, he shall fix the date, time and place for inquiring into the claim and shall give notice of the same to the applicant with an intimation to produce any documentary or other evidence in support of his claim.

(3) After hearing the applicant, and after taking into consideration the evidence, if any, produced by the applicant the Compensation Officer shall determine the amount of compensation according to the provisions of the Act and shall decide the dispute, if any, as to the apportionment of the amount of compensation or any part thereof or as to the persons to whom the same or any part thereof is payable. After determining the compensation and deciding the dispute, if any, the Compensation Officer shall make an order accordingly.

(4) A copy of the Order under sub-rule (1) or (3) shall be sent to the applicant.

5. (1) Where the amount of compensation determined under these rules is in respect of matters other than rent the Compensation Officer shall make an order assessing such amount and shall direct the same to be paid to the person in whose favour the order has been made under rule 4 within such reasonable time as the Compensation Officer may in each case specify in such order.

(2) Where the amount of compensation determined under these rules is in respect of rent only, the State Government may direct the tenant to pay the amount of rent direct to the person in whose favour the order has been made under rule 4.

6. If the total amount of compensation assessed under these rules in respect of land referred to in section 8 does not exceed (*a*) Rs. 250, in areas within the limits of a Municipality, and (*b*) Rs. 150, elsewhere, no appeal shall lie under sub-section (*3*) of section 8.

7. (1) The amount of court fee payable on a memorandum of appeal under sub-section (*3*) of section 8 of the Act shall be at the rate of 5 per centum on the amount computed according to the difference between the amount awarded and the amount claimed by the appellant.

(2) The memorandum of appeal under clause (*b*) of sub-section (*2*) of section 9 shall bear a court fee of rupees five.

FORM A.

Form of Application.

(1) Full name of Applicant.

(2) Full Residential Address.

(3) Premises/Land under requisition in respect of which compensation is claimed.

(4) Date of requisition and details of requisition Order. (Such as No. and Date, etc.).

(5) Evidence of individual or Joint ownership of the aforesaid premises/land. (Documents to be produced).

(6) Whether the said premises/land is owned individually ; if so, the full name of the landlord and his present address.

(7) Whether the said premises/land is owned jointly by more than one landlord ; if so, their names and full residential addresses.

(8) The standard rent per month received by the landlord in respect of the aforesaid requisitioned premises/land during the past ten years.

(9) If the premises/land were not rented in the preceding year what rent is now proposed for the same and the justification thereof.

(10) The total area of the requisitioned premises/land showing details of each room, verandah, gallery, etc., and other facilities attached to the premises /land.

(11) The total amount of compensation now claimed under separate items such as rent, etc., to be mentioned in details indicating separately whether (*a*) recurring per month or per year, or (*b*) non-recurring.

I/We hereby solemnly declare that the above information is correct to the best of my/our knowledge.

Date.....

Signature of Landlord/s. Signature of the Claimant applicant/s.

FORM B.

MEMORANDUM OF AGREEMENT made this.....day of.....One thousand nine hundred and forty.....BETWEEN.....by caste.....by occupation.....at present residing at.....hereinafter referred to as the owner/owners (which expression shall unless excluded by or repugnant to the context be deemed to include his/their respective heirs, executors, administrators and assigns) of the one part and THE GOVERNOR OF BOMBAY (hereinafter referred to as " the Government " which expression shall unless excluded by or repugnant to the context be deemed to include his successors and assigns) of the other part.

WHEREAS the owner/s is/are seized and possessed of or otherwise well and sufficiently entitled to the premises/land situate lying and being at.....and more particularly described in the Schedule hereunder written (hereinafter called " the said property ").

AND WHEREAS the said property has been requisitioned under the Bombay Land Requisition Act, 1948 (hereinafter referred to as the said Act) and on the .....day of..... 195 have been taken possession of by or on behalf of or under the authority of the Government ;

AND WHEREAS the owner/owners has/have represented to and informed the Government that the owner/owners alone is/are entitled to the compensation payable in respect of the said property and that no other person has any right to such compensation or any part thereof ;

AND WHEREAS the Government has agreed to pay the said compensation to the owner/s on the terms and conditions hereinafter appearing.

AND WHEREAS the amount of compensation payable by the Government to the owner/owners in respect of the said property has been fixed at Rs. ..... by the Compensation Officer authorised in that behalf under section 8 (*1*)/*9* (*2*) (*b*) of the said Act.

NOW THIS AGREEMENT WITNESSETH as follows :—

1. The Government or on its behalf the tenant who has been given possession on the said property shall pay and the owner/owners shall accept and receive a sum of

Rs. ..... in full settlement of the compensation / per month as compensation for the use for the said property.

of the said property so long as it continues under requisition.

2. The owner/owners shall not claim or be entitled to any other compensation whatsoever in connection with the said requisition excepting the compensation if any to which the owner/owners may be entitled to under section 9 of the said Act.*

3. The owner/s shall indemnify and keep harmless the Government against all distresses, actions, proceedings, claims, costs, damages and expenses which may be levied, brought, made or incurred against the Government or which the Government may sustain or by reason of the Government or the tenant on behalf of Government having paid the said amount of compensation to him/them. Government may without prejudice to any other rights, powers or remedies of Government recover such amount from the owner/s as an arrear of land revenue.

4. All questions or differences whatsoever which may at any time hereafter arise between the parties hereto or their respective representatives touching these presents or the construction hereof or as to any other matter in anywise arising out of or connected with the subject-matter of these presents, the same shall be referred to the Compensation Officer whose decision shall be final and binding on the parties hereto.

5. The Government shall bear the stamp duty payable in respect of this agreement and its duplicate.

SCHEDULE.

(Particulars and description of property requisitioned.)

IN WITNESS WHEREOF.....the owner abovenamed has set his hand and the .....hath for and on behalf of the Governor of Bombay set his hand and the seal of his office hereto the day and year first above written.

SIGNED AND DELIVERED BY
Esquire,
abovenamed (owner) in the
presence of
(1)
(2)

SIGNED SEALED AND DELIVERED BY
Esquire,
in the presence of—
(1)
(2)

*To be deleted when compensation is claimed under section 9

G. N., H. & L. G. D., No. 0931/5788-N, dated 28th July 1948 (B. G., Pt. I, p. 3566).

Amended by G. N., H. & L. G. D., No. O. 1541/9086/N, dated 5th November 1948.

S. 19 (2)

Bomba Land Requisition (Exemption) Rules, 1948.

In exercise of the powers conferred by clause (*iv*) of sub-section (*2*) of section 19 of the Bombay Land Requisition Act, 1948 (Bom. XXXIII of 1948), the Government of Bombay is pleased to make the following rules, namely :—

1. These rules may be called the Bombay Land Requisition (Exemption) Rules, 1948.

2. In these rules, the Act means the Bombay Land Requisition Act, 1948.

3. The lands used for the purposes of public religious worship shall be exempt from the provisions of sections 5 and 6 of the Act.

4. The buildings specified in the first column of the Schedule hereto appended are exempted from the provisions of he section or sections of the Act specified against them in the second column on the terms and conditions specified against them in the third column of the said Schedule.

5. If any of the terms and conditions specified in rule 4 are not complied with, the State Government may withdraw the exemption granted under rule 4. The decision of Government shall be final.

6. The State Government may by order direct that any power or duty which by these rules or the schedule thereto is conferred or imposed upon the State Government shall be exercised or discharged by such officer as may be specified in such order.

The Schedule.

Description of Buildings exempted.	Section or sections of the Act from which exempted.	Terms and Conditions of exemption.
1	2	3
1. Buildings owned by a Co-operative Housing Society or the members thereof under the by-laws of the society.	5 and 6 ...	(1) The premises may be occupied by the members owning the same or may be let to members of the Society in accordance with the by-laws of the society. (2) No premises shall be kept vacant for more than one month. If any premises remain vacant for a longer period, the vacancy shall be reported within seven days of the expiry of the month to the officer authorised under section 6 of the Act.

Description of Buildings exempted.	Section or sections of Act from which exempted.	Terms and Conditions of exemption.
	2	3
		(3) Where premises are let under clause (1) to another member of the society after the date of the coming into operation of these rules, an intimation shall be given to the officer authorised under section 6 of the Act within seven days from the date of letting the premises, giving particulars regarding the premises including the name and date of leaving of the outgoing tenant and the name and date of occupation of the incoming tenant.
2. Buildings owned by or vesting in Charitable Societies, Trusts or such other Agencies for providing cheap housing.	5 and 6	(1) The landlord of the building shall apply to Government for exemption giving *inter alia* the following particulars :— (*i*) Name and address of the landlord. (*ii*) The full description of the premises including accommodation and rent. (2) The actual rent charged shall be substantially less than the economic rent of the premises. (3) The landlord shall draw up allotment rules and submit them to Government for approval. All allotments of accommodation shall be made according to the rules approved by Government. (4) No premises shall be kept vacant for more than one month. If any premises remain vacant for a longer period, the vacancy shall be reported within seven days of the expiry of the month to the officer authorised under section 6 of the Act. (5) The exemption may be refused in any case by Government without assigning any reason. The decision of Governmet shall be final.

Description of Buildings exempted.	Section or sections of Act from which exempted.	Terms and Conditions of exemption.
1	2	3
3. Buildings newly erected or reconstructed by the landlord for his own use as residence.	6 ...	(1) If the landlord occupies the premises so erected or reconstructed, he shall vacate the other residential accommodation held by him, if any. (2) Where the landlord vacates accommodation under clause (1), he shall send an intimation to the officer authorised under section 6 of the Act within seven days of his doing so, giving the particulars of the accommodation held by him including the area and the rent, if any, of the accommodation.
4. Buildings newly erected or reconstructed by employers for the *bona fide* use of their employees	6 ...	(1) The employer shall draw up allotment rules and submit them to Government for approval. All allotments of accommodation shall be made according to the rules approved by Government. (2) If any premises remain vacant for more than one month, the vacancy shall be reported within seven days of the expiry of the month to the officer authorised under section 6 of the Act.
5. Buildings newly erected or reconstructed where allotment of accommodation proposed by the landlord is in the opinion of Government reasonable and *bona fide*.	...	(1) The landlord shall apply to Government for exemption. (2) The exemption may be granted in respect of premises proposed to be allotted to the parents, sons, daughters or other near relatives of the landlord, provided the accommodation proposed is in the opinion of Government reasonable. (3) The exemption may also be granted in respect of premises proposed to be allotted to other persons acquainted with the landlord if Government is satisfied that the proposal is *bona fide* and that the accommodation proposed is reasonable. (4) The exemption may be refused in any case by Government without assigning any reason. The decision of Government shall be final.

THE BOMBAY LOTTERIES AND PRIZE COMPETITIONS CONTROL AND TAX ACT, 1948 (BOM. LIV OF 1948).

G. N., H. D., No. 7049/5, dated 1st April 1949 (B. G., Pt. IV-B, p. 505). **S. 31.**

Bombay Lotteries and prize Competitions Control and Tax Rules, 1949.

In exercise of the powers conferred by section 31 of the Bombay Lotteries and Prize Competitions Control and Tax Act, 1948 (Bom. LIV of 1948), the Government of Bombay is pleased to make the following rules, namely :—

1. *Title.*—These rules may be called the Bombay Lotteries and Prize Competitions Control and Tax Rules, 1949.

2. *Definitions.*—In these rules unless there is anything repugnant in the subject or context,—

(*a*) "Act" means the Bombay Lotteries and Prize Competitions Control and Tax Act, 1948 ;

(*b*) "form" means a form appended to these rules ;

(*c*) "licence" means a licence granted under section 5, 6 or 7 of the Act ;

(*d*) "Licensing Officer" means the Collector or such other Officer as may be authorized by the State Government under section 24 of the Act to grant licences ;

(*e*) "section" means a section of the Act ;

(*f*) "tax" means the tax levied under section 12 of the Act on a lottery or prize competition licensed under section 5, 6 or 7 of the Act, as the case may be ;

(*g*) words and expression not defined in these rules shall have the meanings assigned to them in the Act.

3. *Application for licence.*—Any promoter desirious of obtaining a licence under section 5, 6 or 7, shall, either personally or by registered post, submit an application in Form A, B or C, as the case may be, to the Licensing Officer.

4. *Forms and particulars of the licence.*—Every licence under sections 5, 6 and 7 shall be in Form D, E and F, respectively, and shall be subject to the conditions and restrictions therein specified and to the provisions of the Act, and these rules. The licence shall be effective throughout the State of Bombay.

5. *Fees for grant of licences.*—(1) A fee shall be charged for every licence as follows :

(*i*) Rs. 10 for every entertainment lottery ;

(*ii*) (*a*) Rs. 10 for every private lottery promoted by a society having not more than 500 members and restricted to its members ;

(*b*) Rs. 25 for every other private lottery ;

(*iii*) Rs. 25 for every prize competition.

Such fee shall be paid by every applicant into a Government Treasury or a Sub-Treasury or into the Reserve Bank of India on Government account or paid in cash or sent by money order to the Licensing Officer.

(2) No application for the grant of a licence shall be entertained unless the amount of the licence fee is so paid or sent.

6. *Suspension or cancellation of licence.*—The Licensing Officer ordering the suspension or cancellation of any licence under section 11 shall record his reasons for such order and shall, if requested, furnish a copy of such order together with the reasons for it to the holder of the licence.

7 *Transfer of the licence and partnership.*—Every licence granted under these rules shall be deemed to have been granted personally to the promotor named therein, and no such promoter shall sell or otherwise transfer, or enter into a partnership with any person for the working of such licence.

8. *Loss of License.*—When any license granted under these rules is lost or is destroyed or if a holder so desires, a duplicate copy thereof may be furnished to the holder by the Licensing Officer on payment of a fee of—

(*i*) Rs. 2 for license for an entertainment lottery.
(*ii*) Rs. 5 for license for a private lottery.
(*iii*) Rs. 10 for license for a prize competition.

9. *Production of license on demand.*—Every person holding or acting under a license granted under these rules shall produce the same or a copy thereof furnished to him under rule 8 whenever called upon to do so by an officer duly empowered in this behalf.

10. *Keeping books of accounts.*—The books of accounts kept by a licencee under section 15 of the Act shall contain the following patriculars :—

(*a*) *In the case of an entertainment lottery*—

(*i*) the number of tickets printed ;
(*ii*) the price of the tickets ;
(*iii*) the number of the tickets sold ;
(*iv*) the amount received by sale of tickets ;
(*v*) the expenses incurred in printing tickets ;
(*vi*) the expenses incurred in purchasing prizes in the lottery ;
(*vii*) the proceeds of the entertainment including the proceeds of the lottery;
(*viii*) the expenses incurred on the entertainment excluding expenses incurred in connection with the lottery ;
(*ix*) the total proceeds of the entertainment (including the poceeds of the lottery) after deducting the amounts under pragraphs (*v*), (*vi*) and (*viii*) ;
(*x*) the tax paid on the lottery.

(*b*) *In the case of private lottery*—

(*i*) the number of tickets printed ;
(*ii*) the price of the ticket or chance in the lottery ;
(*iii*) the number of tickets or chances sold ;
(*iv*) the total proceeds of the lottery ;
(*v*) the expenses incurred for printing and stationery ;
(*vi*) the amount devoted to the provision of prizes for purchasers of tickets or chances ; or the amount devoted to the purposes which are purposes of the Society as the case may be;
(*vii*) the tax paid on the lottery.

(*c*) *In the case of prize competitions*—

(*i*) the number of coupons submitted by persons in respect of every prize competition ;

(*ii*) the number of free entry coupons ;

(*iii*) the amount received in respect of such competition ;

(*iv*) the tax paid in respect of the prize competition :

Provided that in case of a prize competition in respect of which the entrance fee is included in or forms part of the consideration for the sale of any goods and is not separately levied, the licensee shall keep a separate account of the sums received in respect of such fee :

Provided further that when no entrance fee is levied in any manner whatever in respect of a prize competition, the licensee shall keep a separate account of the prizes given away in such prize competition.

11. *Every licensee to furnish return of accounts kept under section 15 of the Act.*—(*a*) Every licensee in the case of lotteries shall submit to Licensing Officer a statement of account within seven days of the drawing of the lottery ; and

(*b*) Every licensee in the case of prize competition shall, within 15 days of the close of each calendar month, submit to the Licensing Officer a return in Form G of the total sum received by him during the month and other particulars in respect of every prize competition.

12. *Penalty for breach of rule 7, 9, 10 or 11.*—Any licensee contravening rule 7, 9, 10 or 11 of these rules shall, on conviction, be liable to fine which may extend to fifty rupees.

FORM A.

(*See* rule 3.)

Application for the grant of a licence under section 5 of the Bombay Lotteries and Prize Competitions Control and Tax Act, 1948 (Bom. LIV of 1948).

	The replies to be written in this column.
1. Full name and address of the promoter.	
Town or village (and name of street and number of premises in case of a town).	
Taluka	
District	

*2. The details of the entertainment lottery for which licence is applied for, viz., place, date or dates, and time of the entertainment, the price of the ticket and the amount proposed to be spent on prizes in the lottery.

3. Whether the promoter had applied for a licence before and, if so, with what result.

4. Remarks.

Signature of the applicant.

Date of application.

**Explanation.*—The applicant shall furnish to the Licensing Officer a specimen of the ticket in the lottery and any other literature proposed to be issued in connection with the lottery.

FORM B.

(*See* rule 3.)

Application for the grant of a licence under section 6 of the Bombay Lotteries and Prize Competitions Control and Tax Act, 1948 (Bom. LIV of 1948).

The replies to be written in this column.

1. Full name and address of the promoter.

   Town or village (and name of street and number of premises in case of a town).

   Taluka ... ...

   District ... ...

2. Full name and address and number of members of the Society in case the lottery is promoted for members of a Society.

*3. The details of the private lottery for which licence is applied for, viz., place, date and time of the holding of the lottery and the price of the ticket or chance in the lottery and the prizes offered to purchasers of tickets or chances in the lottery and/or portion of proceeds proposed to be devoted to purposes which are purposes of the Society.

4. Whether the promoter had applied for a licence before and, if so, with what result.

5. Remarks.

Signature of the applicant.

Date of application.

**Explanation.—The applicant shall furnish to the Licensing Officer a specimen of the ticket or chance in the lottery and any other literature proposed to be issued in connection with the lottery.*

FORM C.

(*See* rule 3.)

Application for the grant of a licence under section 7 of the Bombay Lotteries and Prize Competitions Control and Tax Act, 1948 (Bom. LIV of 1948).

The replies to be written in this column.

1. Full name and address of the promoter.

2. Name of newspaper or periodical or place of business.

Town or village (and name of street and number of premises in case of a town).

Taluka ... ...

District ... ...

*3. The details of the prize competition (or competitions) for which licence is applied for with details of entrance fee and the method of selecting the prize winners.

**Explanation.—The applicant shall furnish to the Licensing Officer a specimen entry form and any other literature proposed to be issued in connection with the prize competition.*

4. Whether the promoter had applied for a licence before and, if so, with what result.

5. Remarks.

Signature of the applicant,

Date of application.

FORM D.

(*See* rule 4.)

Licence for an Entertainment Lottery under section 5 of the Bombay Lotteries and Prize Competitions Control and Tax Act, 1948 (Bom. LIV of 1948).

Licence No.

(Name of Promoter) .....

(Address) .....

(Signature and place).....Town or Village (name of street and number of premises in case of a town) .....Taluka.....

District .....

is hereby granted licence subject to the provisions of the Bombay Lotteries and Prize Competitions Control and Tax Act, 1948 (Bom. LIV of 1948), (hereinafter called "the said Act") and the rules thereunder for the promotion of a lottery described in the Schedule annexed to this licence, as an incident of an entertainment to be held on (date or dates) subject to the conditions hereinafter mentioned, namely :—

Conditions.

1. The licensee shall afford all facilities for the checking of his account and shall, at all reasonable times, produce for inspection accounts or other documents and shall furnish fully and correctly any information in his possession as may be required for the purpose of the Act by the Licensing Officer or by any officer authorised by him in this behalf.

2. The licensee shall not vary the details of the price of the ticket and the prizes stated in respect thereof in the Schedule hereto annexed without the previous permission of the Licensing Officer.

3. The licensee shall state in a prominent place in every notice, announcement ticket or any other document issued in connection with the lottery that he has obtained such licence and shall also specify in such notice, announcement ticket or other documents, the number and date of the licence.

4. The licensee shall, if called upon by the Licensing Officer, to do so at any time, deposit in cash or in Government Securities or in Post Office Cash Certificates an amount equal to the probable amount of the tax payable by him under section 12 of the Act in respect of the lottery.

5. Without prejudice to the liability of the licensee, if any, to be proceeded against under any of the provisions of the Act or the rules made thereunder the licence shall be liable to be suspended or cancelled in accordance with the provisions of section 11 of the Act.

6. If the licence is suspended or cancelled for any reason, the licensee shall not be entitled to any compensation for such suspension or cancellation or to the refund of any fee paid in respect thereof.

Dated this day of 19

Seal of Licensing Officer.

Signature of the Licensing Officer. :.....

Designation .....

SCHEDULE.

(Description of the entertainment lottery.)

FORM E.

(*See* Rule 4.)

Licence for promotion of a Private Lottery under section 6 of the Bombay Lotteries and Prize Competitions Control and Tax Act, 1948 (Bom. LIV of 1948).

Licence No.

(Name(s) of Promoter(s)).....

.....

(Address).....

(Situation and place of business).....

Town or village (name of street and number of premises in case of a town).....

.....

Taluka....., District.....

is hereby granted licence subject to the provisions of the Bombay Lotteries and Prize Competitions Control and Tax Act, 1948 (Bom. LIV of 1948) (hereinafter called

" the said Act ") and the rules thereunder for promotion of a private lottery described in the Schedule annexed to this licence to be held on the (date or dates).....
.....subject to the conditions hereinafter mentioned, namely :—

Conditions.

1. The licensee shall afford all facilities for the checking of his account and shall, at all reasonable times, produce for inspection accounts or other documents and furnish fully and correctly any information in his possession as may be required for the purposes of the Act by the Licensing Officer or by any Officer authorised by him in this behalf.

2. The licensee shall not vary the details of the price of the ticket and the prizes stated in respect thereof in the attached Schedule hereto annexed without the previous permission of the Licensing Officer.

3. The licensee shall state in a prominent place in every notice announcement, ticket or any other document issued in connection with the lottery that he has obtained such licence and shall also specify therein the number and date of the licence.

4. The licensee shall, if called upon by the Licensing Officer to do so at any time deposit in cash or in Government Securities or in Post Office Cash Certificates an amount equal to the probable amount of the tax payable by him under section 12 of the Act in respect of the lottery.

5. Without prjudice to the liability of the licensee, if any, to be proceeded against under any of the provisions of the Act and the rules made thereunder the licence shall be liable to be suspended or cancelled in accordance with the provisions of section 11 of the Act.

6. If the licence is suspended or cancelled for any reason, the licensee shall not be entitled to any compensation for such suspension or cancellation or to the refund of any fee paid in respect thereof.

Dated this day of 19

Signature of the

Seal of Licensing Officer.

Licensing Officer .....

Designation .....

SCHEDULE.

(Description of the private lottery.)

FORM F.

(*See* Rule 4.)

Licence for promotion of a Prize Competition (or Competitions) under section 7 of the Bombay Lotteries and Prize Competitions Control and Tax Act, 1948 (Bom. LIV of 1948).

Licence No.

(Name of Promoter).....

(Name of Newspaper or periodical).....

(Address).....

(Situation and place of business).....

Town or village (name of street and number of premises in the case of a town).....
.....

Taluka....., District.....

is hereby granted licence subject to the provisions of the Bombay Lotteries and Prize Competitions Control and Tax Act, 1948 (Bom. LIV of 1948), (hereinafter called " the said Act "), and the rules thereunder for promotion of prize competition (or competitions) described in the Schedule annexed to this licence, for the period from 19 to 31st March 19 , both days inclusive, subject to the conditions hereinafter mentioned, namely :—

Conditions.

1. The licensee shall afford all facilities for the checking of his accounts and shall, at all reasonable times, produce for inspection accounts or other documents and shall furnish fully and correctly any information in his possession as may be required for the purposes of the Act by the Licensing Officer or any officer authorized by him in this behalf.

2. The licensee shall not vary the details of the competition entrance fee and the prizes stated in respect thereof in the Schedule hereto annexed without the previous permission of the Licensing Officer.

3. The licensee shall state in a prominent place in every publication, ticket or coupon issued in connection with the prize competition (s) that he has obtained such licence and shall also specify in such publication, ticket or coupon the number and date of the licence.

4. The licensee shall not exhibit or cause to be exhibited in his place of business or any other public place any document which is or purports to be a cash voucher, ticket or entry fee receipt issued in connection with the prize competition.

5. The licensee shall, if called upon by the Licensing Officer to do so at any time deposit in cash or in Government securities or in Post Office Cash Certificates an amount equal to the probable amount of the tax payable by him under section 12 of the Act for any quarter in respect of the prize competition or competitions.

6. The licensee shall appoint a committee for the purpose of scrutinising the result of each prize competition and the Licensing Officer or any Officer appointed by him in this behalf shall be one of the members of such committee.

7. Without prejudice to the liability of the licensee, if any, to be proceeded against under any of the provisions of the Act and the rules made thereunder, the licence shall be liable to be suspended or cancelled in accordance with the provisions of section 11 of the Act.

8. If the licence is suspended or cancelled for any reason the licensee shall not be entitled to any compensation for such suspension or cancellation or to the refund of any fee paid in respect thereof.

Dated this day of 19

Seal of Licensing Officer.

Signature of the Licensing Officer :.....

Designation : .....

SCHEDULE.

(Description of the Prize Competition (or Competitions).

FORM G.

(*See* rule 11.)

Name of Promoter .....

Number of Licence .....

Nature and description of Prize Competition .....

Prizes offered for the Competition .....

Month.	Total number of coupons submitted.	Total number of free entry coupons.	Total sum received in respect of such competition.	Remarks.
1	2	3	4	5

I do hereby declare that I have compared the above particulars with my book of account and they are, in so far as I can ascertain, accurate and complete.

Dated this day of 19

Signature of the Promoter.

THE BOMBAY TENANCY AND AGRICULTURAL LANDS ACT, 1948 (BOM. LXVII OF 1948).

G. N., R. D., No. 6816/45-F, dated the 18th January 1949 (B. G., Pt. IV-A, p. 125). S. 67 (3)

In exercise of the powers conferred by sub-section (*3*) of section 67 of the Bombay Tenancy and Agricultural Lands Act, 1948 (Bom. LXVII of 1948), the Government of Bombay is pleased to authorise the Mamlatdars to exercise the powers and perform the duties and functions of the Agricultural Lands Tribunal under the said Act within the areas under their respective jurisdictions.

G. N., R. D., No. 6816/45-F, dated 18th January 1949 (B. G., Pt. IV-B, p. 126). S. 67 (3)

In exercise of the powers conferred by sub-section (*3*) of section 67 of the Bombay Tenancy and Agricultural Lands Act, 1948 (Bom. LXVII of 1948), read with paragraph 3 of the Indian States (Application of Laws) Order, 1948, the Government of Bombay is pleased to authorise the Mamlatdars to exercise the powers and perform the duties and functions of the Agricultural Lands Tribunal under the said Act, within the areas of the States mentioned in the Schedule I to the said Order under their respective jurisdictions.

G. N., R. D., No. 10138/45-II, dated 9th September 1949 (B. G., Pt. IV-B, p. 1841). SS. 76 & 82. Bombay Tenancy and Agricultural Lands (Tribunal Procedure) Rules, 1949.

In exercise of the powers conferred by sections 76 and 82 of the Bombay Tenancy and Agricultural Lands Act, 1948 (Bom. LXVII of 1948), and after consultation with the Bombay Revenue Tribunal, the Government of Bombay is pleased to make the following rules, namely :—

1. These rules may be called the Bombay Tenancy and Agricultural Lands (Tribunal Procedure) Rules, 1949.

2. In these rules, unless there is anything repugnant in the subject or context—

(1) "Act" means the Bombay Tenancy and Agricultural Lands Act, 1948;

(2) "appeal" means a memorandum of appeal to the Tribunal filed under section 75 of the Act;

(3) "application for revision" means an application for revision made to the Tribunal under section 76 of the Act;

(4) "Form" means a Form appended to these Rules;

(5) "Joint Secretary" means the Assistant Commissioner of the Division in which the subject matter of an appeal or an application for rvision in any case is situate;

(6) " Member " means a member of the Tribunal and includes a Non-Official member or the President of the Tribunal;

(7) " pleader " means a pleader as defined in secction 2 (*15*) of the Code of Civil Procedure, 1908;

(8) " President " means the President of the Tribunal;

(9) " Tribunal " means the Bombay Revenue Tribunal constituted under section 3 of the Bombay Revenue Tribunal Act, 1939;

(10) " Rules " means the Bombay Tenancy and Agricultural Lands Rules, 1949 or these rules, as the case may be;

(11) " Secretary " means the Secretary to the Tribunal.

3. (1) An appeal or an application for revision shall be presented in person by the appellant or applicant, as the case may be, or by his pleader or duly appointed agent to the Joint Secretary or sent to him by registered post.

(2) When such appeal or application is presented by a pleader or an agent, it shall be accompanied by a letter of authority appointing him as such.

(3) Every such appeal or application shall specify the name and address of the appellant or the applicant, as the case may be, and shall clearly set out the grounds on which the appeal or application is made.

(4) Every such appeal or application shall be accompanied by the award or order of the Collector in original or by certified copy thereof, against which the appeal or application is made.

(5) Every such appeal or application shall bear the court fee stamp of Rs. 5.

4. (1) On receipt of an appeal or an application for revision, the Joint Secretary shall endorse on it the date of its receipt, cause it to be registered in the appropriate register maintained under rule 5, acknowledge its receipt and refer it to the Commissioner to whom he is subordinate.

(2) Every such acknowledgment shall show the date of receipt of the appeal or the application for revision, the name and address of the appellant or the applicant and the number under which the appeal or the application is registered. The Joint Secretary shall forward a copy of every such acknowledgement to the Secretary for his information.

5. Every Joint Secretary shall maintain separate registers for—

(1) appeals in Form A; and

(2) applications for revision in Form B.

6. (1) If the Commissioner to whom an appeal or an application for revision is referred to by the Joint Secretary is of the opinion that—

(*a*) the person presenting it has no authority to do so;
(*b*) it does not lie to the Tribunal;
(*c*) it is not made within the prescribed time;

(*d*) it does not comply with any of the provisions of the Act or the Rules ; or

(*e*) it should be rejected summarily ;

he shall endorse on it his opinion and forward it to the President through the Non-official Member. The Non-official Member shall record his opinion on the appeal or application and forward it to the President :

Provided that if the appeal or the application does not conform with any of the provisions of the Act or the Rules, the Commissioner may call upon the party concerned to remedy the defects within a period of seven days of the receipt of the notice to do so. If the party fails to remedy the defects within the said period or such further period as may be allowed by the Commissioner, the Commissioner shall report the fact to the President through the Non-official Member.

(2) If the Commissioner is of the opinion that the appeal or the application lies to the Tribunal and that it should not be rejected summarily, he shall direct that the record and proceedings of the case should be called. After receipt of the record and proceedings and after recording his opinion thereon he shall forward the appeal or the application, with the record and proceedings, to the President through the Non-official Member. The Non-official member on receipt of the Commissioner's opinion shall forward the appeal or the application, with the record and proceedings, after recording his opinion thereon to the President.

(3) At the time of forwarding an appeal or application to the President through the Non-official Member under sub-rule (1) or (2), the Commissioner shall also send an intimation to the Secretary of the date of its despatch to the Non-official Member.

7. Pending a decision on an appeal or an application for revision made to the Tribunal, the Commissioner may direct the execution of any award or order against which the appeal or application is made to be stayed on such conditions as he thinks fit.

8. On receipt of an appeal or an application, the President shall go through the papers and if he is of the opinion that there is substance in the appeal or the application, he shall admit it.

9. (1) If the President is of the opinion that there is no substance in any appeal or when the President has received a report from the Commissioner under the proviso to sub-rule (1) of rule 6 in respect of any appeal, the President may direct that the appeal be placed before the Tribunal for preliminary hearing on a date to be fixed by him of which notice shall be given to the appellant. At such hearing the appellant or his agent or his pleader, if present, shall be heard and the appeal shall be admitted or rejected in accordance with the opinion of the majority of the Tribunal. If the appeal be rejected, the Tribunal shall give reasons for doing so.

(2) A notice under sub-rule (1) shall declare that if the parties do not appear before the Tribunal either in person or through agent on the date mentioned in the notice or on any subsequent date to which the hearing may be adjourned the appeal shall be heard and decided *ex-parte*.

10. After an appeal has been admitted, a notice shall be delivered or sent by registered post to the parties concerned calling upon them to appear before the Tribunal on the date specified in the notice. The notice shall also declare that if

the party concerned does not appear before the Tribunal either in person or through an agent or pleader on the date specified in the notice or on any subsequent date to which the hearing may be adjourned, the Tribunal shall hear and decide the appeal *ex-parte*.

11. (1) If on the date fixed for hearing or any other subsequent day to which the hearing may be adjourned, the appellant does not appear either in person or by his agent when the appeal is called for hearing, the Tribunal may dismiss the appeal or may decide it on merits, after hearing the respondent or his agent or his pleader, if present.

(2) If on the date fixed for hearing or on any other subsequent day to which the hearing may be adjourned, the respondent does not appear in person or by his agent when the appeal is called for hearing, the Tribunal may decide the same on merits, after hearing the appellant or his agent or his pleader.

12. If any of the parties was absent at the date of the hearing, either preliminary or final, and the appeal was heard and decided *ex-parte*, the party concerned may apply for restoration of the appeal and if the party satisfies the Tribunal that he had no notice of the date of the hearing or that he was prevented from any sufficient cause from appearing when the appeal was called for hearing, the Tribunal may restore the appeal to its file, provided that where the other party had appeared in the appeal such party shall be given notice and an opportunity of being heard before the order for restoration of the appeal is made.

13. The Tribunal may direct the Collector against whose award an appeal is made to make such further investigation or to take such additional evidence, directly or through his subordinates as it may think necessary. The Tribunal may on such terms as it thinks fit and at any stage adjourn the hearing of the appeal.

14. When the hearing of an appeal is complete, the Tribunal shall pronounce its judgment.

15. (1) Every judgment of the Tribunal shall be in writing.

(2) When the judgment is unanimous, it shall be signed by all members. Where it is a judgment of the majority, it shall be signed and dated by the members forming the majority. The dissenting member shall also write his judgment and record his opinion on the point or points on which he dissents, but the decision of the majority shall prevail.

16. The Tribunal shall, in its judgment, state at the end, whether the appeal is dismissed or allowed, wholly or in part and mention the relief, if any, granted to the appellant.

17. An application for revision shall ordinarily be disposed of by the Tribunal by circulation but when the President or the other two members of the Tribunal are of the opinion that a joint sitting is necessary, a joint sitting shall be held at such place as the President may determine and the decision shall be reached after personal discussion and if necessary after giving a hearing to the parties concerned.

18. The Tribunal may either annual, reverse, modify or confirm the order of the Collector against which an application for revision is made or may direct the Collector to make such further investigation or to take such additional evidence, directly or through his subordinates, as it may think necessary :

Provided that no order shall be annulled, reversed or modified to the prejudice of any party unless opportunity has been given to such party to represent his case before the passing of the final order.

19. Where all the members of the Tribunal agree, their decision on an application for revision disposed of under rule 17 shall be in accordance with the opinion of all the members, but where there is difference of opinion between them, the decision of the Majority shall prevail. If for any reason any of the members, other than the President, is unable to give his opinion, and the President and the other member agree in their opinion, the decision shall be in accordance with such opinion. The President shall prepare the order in accordance with the decision so arrived at and the order so prepared shall be signed by all the members of the Tribunal.

20. When any application for revision is to be decided after hearing the parties the Tribunal shall for the disposal of the application follow, so far as may be, the procedure laid down in rules 9 to 16 (both inclusive) for disposal of an appeal.

21. A certified copy of the final order passed by the Tribunal on any appeal or application for revision shall be forwarded as soon as practicable to the Collector concerned and also to the appellant or applicant free of cost and without application.

22. The Collector to whom the order is communicated under rule 21, shall, within a reasonable time, inform the Secretary that the order has been duly carried out.

23. When any record and proceedings are called for by the Tribunal and sent to it, the Collector concerned shall send with such record and proceedings a diary in chronological order showing the date when such proceedings were commenced and the dates and pages of principal orders passed and of important papers and maps or plans filed in such proceedings.

24. The Tribunal may permit any party to appear or act by a pleader duly authorised by him at the hearing of any appeal or application for revision.

25. In deciding appeals and applications for revision, in matters not provided for in these rules the Tribunal shall so far as may be follow the procedure laid down under the relevant provisions of the Code of Civil Procedure, 1908.

FORM A.

(*See* rule 5.)

Register of appeals.

Serial No.	Names of parties and their agents or pleaders, if any.	Date of the award of the Collector.	Date of filing the appeal.	Date of decision by the Tribunal.	Final order passed by the Tribunal.	Remarks.
1	2	3	4	5	6	7

FORM B.

(*See* rule 5.)

Register of applications for revision.

Serial No.	Names of parties and their agents or pleaders, if any.	Date of the order of the Collector.	Date of filing the application.	Date of decision by the Tribunal.	Final order passed by the Tribunal.	Remarks.
1	2	3	4	5	6	7

G. N., R. D., No. 10138/45, dated 27th April 1949 (B. G., Pt. IV-B, p. 941-A).

S. 82

Bombay Tenancy and Agricultural Lands Rules, 1949.

In exercise of the powers conferred by section 82 of the Bombay Tenancy and Agricultural Lands Act, 1948 (Bom. LXVII of 1948), and in supersession of the Bombay Tenancy Rules, 1947, the Government of Bombay is pleased to make the following rules, namely :—

1. *Short title.*—These rules may be called the Bombay Tenancy and Agricultural Lands Rules, 1949.

2. *Definitions.*—In these rules, unless there is anything repugnant in the subject or context,—

(*a*) " Act " means the Bombay Tenancy and Agricultural Lands Act, 1948 ;

(*b*) " form " means a form appended to these rules ;

(*c*) " section " means a section of the Act ;

(*d*) words and expressions used but not defined in these rules shall have the meanings assigned to them in the Act.

3. *Determination of the quantity and value of the crop.*—(1) For the purpose of fixing the maximum rent payable in respect of any land under sub-section (*1*) of section 6 the total yield of the land or its value shall be determined by the Mamlatdar.

(2) Such yield shall be determined on the basis of the rates estimated on either of the following whichever may be lower :—

(*a*) the quantity of average yield per acre of that crop as arrived at by actual crop-cutting experiments under-taken by the revenue or agricultural department or by both in that year in or near that local area.

(*b*) the actual yield per acre agreed to by the landlord and the tenant.

(3) The value shall be calculated on the basis of the average market price for the month of January to March as recorded in Taluka Form XVIII-A given in the Manual of Revenue Accounts.

4. *Determination of crop-share payable as rent.*—(1) Whenever there is a dispute regarding the rent payable by way of a share of the crop grown on any land held by a tenant, the tenant or landlord, as the case may be, shall, before the removal of the crop from the threshing floor or the field, make an application to the Talati of the village. The Talati shall, before the removal of the crop from the threshing floor or the field, as the case may be, arrange to get a Panchnama drawn up of the actual produce of the land of which the produce or rental share is in dispute. The produce recorded in the Panchnama, which shall be signed by the Panchas and the Talati, shall be deemed to be the actual produce :

Provided that where the crop grown on the land is fodder-crop, such application shall be made for determination of the actual produce and the Panchnama shall be drawn up before the crop is removed from the field.

(2) In case the landlord declines to receive the share of the actual produce as determined under sub-rule (1), the tenant shall be entitled to remove the entire crop from the threshing floor or the field, as the case may be, and the landlord shall recover his rent by proceeding under section 86 of the Bombay Land Revenue Code, 1879.

(3) In case the tenant refuses to give to the landlord the share of the actual produce as determined under sub-rule (1), the landlord shall be put in possession of his share by the Talati in the presence of the Panchas and the landlord shall recover the balance of his share, if any, by proceeding under section 86 of the Bombay Land Revenue Code, 1879.

5. *Commutation of crop-share rent into cash.*—(1) When a notification under sub-section (*1*) of section 8 is published in the *Official Gazette*, the Mamlatdars in the areas specified in the notification shall cause copies of the notification in the regional languages to be exhibited at prominent places in the villages concerned and shall cause the contents of the notification to be made known to the villagers by beat of drum for three consecutive days.

(2) The Mamlatdars shall also give similar publicity to the rate of commutation if it is notified by the State Government in the *Official Gazette* under sub-section (*2*) of section 8.

(3) In the areas specified in the notification under sub-section (*1*) of section 8 in respect of which the rate of commutation has not been fixed by the State Government under sub-section (*2*) of the said section, a landlord whose rent is recoverable wholly or partly as a crop-share shall, on publication of the notification in the regional language under sub-rule (1), apply to the Mamlatdar in whose jurisdiction the lands concerned are situate for commutation of rents so far recoverable as crop-share into cash. The application shall be in Form I and shall be submitted so as to reach the Mamlatdar within three months from the date of publication of the notification under sub-rule (1).

(4) On receipt of an application under sub-rule (3) the Mamlatdar shall serve the tenant concerned with notice to appear before him on a date specified in the notice and shall hold the necessary inquiries as regards the crops raised in the lands concerned, the actual yield of the crop and the total amount of crop share payable by a tenant to a landlord.

(5) After holding the necessary inquiries under sub-rule (4), the Mamlatdar shall determine,—

(*a*) the actual yield of the crop subject to the provisions of rule 3 ;

(*b*) the share of the crop to which the landlord is entitled subject to the provisions of section 6 and fix the commuted cash rent in accordance with the provisions of rule 3.

6. *Application for commutation of rent in terms of service or labour into cash.*—An application for commutation of rent received in terms of service or labour into cash under sub-section (*1*) of section 9 shall be in Form II.

7. *Penalty for recovery of rent from a tenant in contravention of the provisions of section 6, 7, 8 or 9.*—Any landlord recovering rent from his tenant in contravention of the provisions of section 6, 7, 8 or 9 shall be liable to pay such penalty to the extent of ten times the excess amount of rent recovered by the landlord from such tenant, but in any case not less than Rs. 50, as the Mamlatdar may determine.

8. *Application for determination of reasonable rent.*—An application to the the Mamlatdar for determination of reasonable rent under section 12 shall be in Form III.

9. *Other factors to be taken into consideration for determining reasonable rent.*—Where an application for determination of reasonable rent is received by the Mamlatdar, he shall, for the purpose of determining the reasonable rent in addition to the factors mentioned in clauses (*a*) to (*e*) of sub-section (*3*) of section 12, take into consideration the value of any service or contribution made by—

(*i*) the landlord towards the cultivation of a tenant's holding, such as protection of crop, grant of seeds or manure; and

(*ii*) a tenant towards maintenance of or repairs to bunds.

10. *Certificate of transfer of house site and fees therefor.*—(1) A certificate of transfer of a house site granted by a Tribunal to a tenant under sub-section (*3*) of section 17 shall be in Form IV.

(2) Before a certificate of transfer of a house site is granted by the Tribunal, fees calculated on the value of such site at the rates specified in column 2 of the Schedule appended to these rules shall be paid.

11. *Application for adjudication of right to produce of trees naturally growing on land or apportionment of such produce.*—An application under sub-section (*2*) of section 20 for an adjudication of the right to the produce of trees naturally growing on the land or the apportionment of such produce shall be made in Form V.

12. *Receipt for rent.*—A receipt given under sub-section (*2*) of section 26 for the amount of rent received in respect of any land shall be in Form VI. The receipt shall be given in the regional language of the locality and the counterfoil of such receipt shall be signed by the tenant or his authorised agent in acknowledgment of the correctness of the counterfoil and receipt of the copy. When a share of the produce is paid as rent, kind and quantity of such produce shall be mentioned in the receipt. The quantity shall be expressed—

(*i*) in places in which Part II of the Bombay Weights and Measures Act, 1932, has come into force, in measures authorised to be used in such places under that Act, and (*ii*) elsewhere in measures notified by the Collector in this behalf.

13. *Application for possession of land or dwelling house.*—An application for possession of any land or dwelling house under sub-section (*1*) or (*2*) of section 29 shall be made in Form VII.

14. *Determination of the reasonable price of land which a protected tenant is entitled to purchase.*—(1) When an application under sub-section (*3*) of section 32, for the determination of the reasonable price of land, is received by the tribunal, it shall

determine the reasonable price of the land after taking into consideration the factors to be taken into consideration in fixing the reasonable rent under section 12 and such other additional factors as in its opinion are relevant and useful.

(2) The amount of price so determined by the Tribunal under sub-rule (1) shall be deposited by the protected tenant with the Tribunal within three months from the date of such determination.

15. *Certificate of purchase by a protected tenant.*—A certificate to be issued to a protected tenant under sub-section (5) of section 32 shall be in Form VIII.

16. *Manner of deciding questions referred to the Tribunal.*—(1) In the event of any question arising under sub-section (7) of section 32 regarding the priority in relation to the purchase of the land among the protected tenants *inter se*, it should be decided by the Tribunal in the following manner, namely :—

If two or more protected tenants make offers in writing to the landlord under sub-section (2) of section 32, and if the total area of the arable land in the ownership of the landlord is such that only one of such protected tenants can exercise his right under sub-section (1) of section 32, the priority shall be given by the Tribunal to the protected tenant who in its opinion has been in possession of the land for a longest and continuous period and the continuance of the possession with whom shall ensure the full and efficient use of the land for agriculture.

(2) If there is any dispute regarding the kind, extent or location of any particular area of land to be purchased by a protected tenant the Tribunal shall decide it after taking into consideration the following factors, namely :—

(*i*) location and kind of land, if any, already held by the protected tenant as owner ;

(*ii*) improvements made, if any, by the protected tenant on the lands ; and

(*iii*) such other factors as may be deemed relevant and useful by the Tribunal.

(3) If there is any dispute between the protected tenant and the landlord or if there is any dispute between the protected tenants *interse*, regarding any other right in relation to the purchase of the land, the Tribunal shall decide such dispute and after taking such evidence as may be adduced.

17. *Application for the exchange of tenancies.*—An application for the exchange of tenancies in respect of the lands held by protected tenants under section (1) of section 33 shall be in Form IX.

18. *Terms and conditions for exchange of lands.*—The terms and conditions for exchange of lands by protected tenants under section 33 shall be as follows, namely :—

(*a*) the land once exchanged shall not be allowed to be exchanged with the same land ;

(*b*) the land to be exchanged should be adjcent to or at least within a radius of one mile from the land or lands held by the respective protected tenants as such protected tenants or as owner in the same or adjacent village ;

(*c*) the protected tenants are not in arrears of rent in respect of the lands to be exchanged ;

(*d*) no proceedings have been started against the protected tenants by their landlords for ejecting them from the lands to be exchanged for breach of the provisions of section 14 or 27 or under section 34 ; and

(*e*) no amount on account of compensation shall be allowed by the Mamlatdar in sanctioning the exchange of the lands.

19. *Certificate of exchange of lands between protected tenants.*—The certificate sanctioning exchange of lands between protected tenants to be issued by the Mamlatdar under sub-section (2) of section 33 shall be in Form X.

20. *Manner of apportioning rent on the termination of the tenancy in respect of a part of the land leased to a protected tenant.*—(1) After the tenancy of a part of the land leased to a protected tenant is terminated by a landlord under sub-section (2) of section 34 and the possession of the land is obtained by him after obtaining an order of a Mamlatdar under sub-section (2) of section 29 in case the landlord and the protected tenant do not agree as to the amount of the rent to be paid for the area of the land left with the protected tenant, the landlord shall make an application in Form XI to the Mamlatdar for the apportionment of the rent.

(2) On receipt of an application under sub-rule (1), the Mamlatdar shall issue a notice to the protected tenant and after holding an inquiry fix the rent of the area of land left with the protected tenant after taking into consideration the following factors :—

(*a*) the total area and kind of the land held by the protected tenant before the termination of his tenancy of a part of the land and the rent paid by him for it ;

(*b*) the factors mentioned in sub-section (3) of section 12.

(3) Nothing contained in this rule shall at any time debar a protected tenant from applying for fixation of reasonable rent under section 12.

21. *Application for determination of compensation for improvement made by protected tenant.*—An application for determination of compensation for improvements made on the land by a protected tenant under sub-section (1) of section 41 shall be in Form XII.

22. *Determination of debts and liabilities by the Manager.*—On the expiry of the period fixed under section 49 read with the proviso to section 51 for notifying the claims against the estate under management, the Manager shall appoint a day for holding an inquiry into the history and merits of every claim received by him. Notice of the date, time and place of the intended enquiry shall be given to every claimant and to the holder of the estate and shall also be published in the village chavdi where the property is situate. The Manager shall then ascertain the nature and extent of all the claims received by him. In case of any dispute as to the fact or extent of debts and liabilities, he shall hold such further enquiry as may be necessary to determine the correct amount of such debts and liabilities due to several claimants.

23. *Manner of notifying liquidation scheme sanctioned by the Collector.*—When the Collector sanctions the liquidation scheme under section 56, he shall notify the fact of such sanction in one of the newspapers, having wide circulation in the area, selected by him and also by affixing a copy of the scheme in the regional language at the following places :—

(1) Office of the Collector ;
(2) Office of the Mamlatdar or Mahalkari ;
(3) Office of the Manager ;
(4) Village chavdi where the property is situate.

24. *Sale or lease of the estate under management or any part thereof.*—The sale or lease of all or any part of the estate under section 58 shall be made by the Manager by public auction, unless such a course is in his opinion unnecessary or inexpedient in view of the size and location of the estate or part of the estate or unless sale or lease by private negotiation is in his opinion likely to be more advantageous. Any such sale shall be made by the Manager only if it appears to him that it is not otherwise possible to meet the cost of the management of the estate or if no adequate balance is left for the liquidation of the debts and liabilities of the estate.

25. *Circumstances in and conditions on which permission for transfer of lands to non-agriculturist may be granted.*—(1) The Collector or other officer authorised under the proviso to sub-section (*1*) of section 63 may grant permission for sale, gift, exchange, lease or mortgage of any land in favour of a person who is not an agriculturist in the following cases, namely :—

(*a*) if the person *bona fide* requires the land for non-agricutural purpose ;

(*b*) if the Collector or authorised officer is satisfied that the owner of the land had complied with the provisions of section 64 ;

(*c*) if the Collector or authorised officer is satisfied that no agriculturist in the village in which the land is situate is prepared to take the land on lease from the owner ;

(*d*) if the land is required for the benefit of an industrial or commercial undertaking ;

(*e*) if the land is required by a Co-operative Society ;

(*f*) if the mortgagee has obtained from the Collector a certificate that he intends to take the profession of agriculturist and agrees to personally cultivate the land.

(2) The permission under the proviso to sub-section (*1*) of section 63 shall be granted on the condition that the person shall use the land for the purpose for which the permission has been granted to him within one year from the date on which he takes possession of the land in accordance with the provisions of this Act.

26. *Form for making an offer for sale of land.*—An offer under sub-section (*2*) of section 64 for sale of land shall be made in Form XIII.

27. *Manner of inquiry for determination of value of estate, land or interest which has been acquired.*—(1) After the publication of the notification under sub-section (*2*) of section 66 regarding the acquisition of any estate, land or interest therein, the Collector shall give notice to the holder of the estate, land or interest, as the case may be, and to all persons known or believed to be interested therein under sub-section (*2*) of section 66 and shall call upon all such persons to state the nature of their respective interests in the estate or land which has been acquired and the amount and particulars of their claims to compensation for such interest within two months from the date of the notice.

(2) All claims under sub-rule (1) shall be made to the Collector in writing with full particulars thereof and documents, if any, as also names and addresses of witnesses to be summoned, if any, and shall be delivered within the period prescribed under sub-rule (1).

(3) The Collector shall then hold an inquiry after summoning the claimants and their witnesses, if any, and such other persons known or believed to have interest in the land or estate on a specified day.

(4) On receiving evidence and after taking into consideration the factors mentioned in sub-section (*4*) of section 66 and the provisions of section 23 of the Land Acquisition Act, 1894, the Collector shall pass an order determining the value of the estate, land or interest, which has been acquired.

28. *Other procedure to be followed by the Mamlatdar or the Tribunal.*—In all matters which are not provided for in the Mamlatdars' Court Act, 1906, the Mamlatdar or the Tribunal shall follow the procedure prescribed for holding formal enquiries under the Bombay Land Revenue Code, 1879.

29. *Court fees.*—(1) Every application made to a Mamlatdar or Tribunal under the Act shall bear a court fee stamp of annas eight and every memorandum of appeal or an application made to the Collector shall bear a court fee stamp of Rs. 2.

(2) Every appeal or revision application made to the Bombay Revenue Tribunal under the Act shall bear a court fee stamp of Rs. 5.

FORM I.

(*See* rule 5.)

Form of application for commutation of crop-share rent into cash under section 8.

To

The Mamlatdar of

Name of the applicant :—

Age Profession Place of residence

Name of the opponent :—

Age Profession Place of residence

Sir,

I am the landlord and the opponent is the tenant of the following lands :—

Survey No.	Pot-Hissa No.	Area.	Assessment.	Village.	Taluka.
		A. g.			

The rent of the land is as given below :—

(Here give details of crop-share rent.)

I apply for commutation of the crop-share rent into cash and for determination of the cash rent.

The extracts of the Record of Rights concerning the lands are enclosed.

I also enclose the following documents :—

(Here give a list of the documents.)

(Names of the witnesses, if any, should be stated. It should also be stated whether they are to be summoned or whether the applicant will produce them.)

Yours faithfully,

Signature of the landlord.

Date—

FORM II.

(*See* rule 6.)

Form of application for commutation of rent in terms of service or labour into cash under section 9.

To

The Mamlatdar of

Name of the applicant :—

Age Profession Place of residence

Name of the opponent :—

Age Profession Place of residence

Sir,

I am the landlord and the opponent is a tenant of the following land :—

Survey No.	Pot Hissa No.	Area.	Assessment.	Village.	Taluka.
		A. g.			

The rent of the land is as given below :—

(Here give details of the rent including the details of the rent received in terms of service or labour.)

I apply for commutation of the rent received in terms of service or labour into cash and for determination of the cash rent.

The extracts of the Record of rights concerning the land are enclosed.

I also enclose the following documents :—

(Here give a list of the documents.)

(Names of the witnesses, if any, should be stated. It should also be stated whether they are to be summoned or whether the applicant will produce them.)

Yours faithfully,

Signature of the landlord.

Date—

FORM III.

(*See* rule 8.)

Form of application for determination of reasonable rent under section 12.

To
The Mamlatdar of

Name of the applicant :—

Age Profession Place of residence

Name of the oppenent :—

Age Profession Place of residence

Sir,
I am the landlord/tenant of the following land :—

Survey No.	Pot-Hissa No.	Area	Assessment.	Village.	Taluka.
		A. g.			

Mr. is the tenant/landlord of this land from the year
The present rent of the land is
The rent is not reasonable for the following reasons :—

(Here state the reasons.)

I am prepared to accept/pay rent namely as reasonable rent of the land. I request you to determine the same under section 12 of the Bombay Tenancy and Agricultural Lands Act, 1948.

The extracts of the Record of Rights concerning the land are enclosed.

I also enclose the following documents.

(Here give a list of the documents.)

(Names of the witnesses, if any, should be stated. It should also be stated whether they are to be summoned or whether the applicant will produce them.)

Yours faithfully,

Signature of the landlord/tenant.

Date—

FORM IV.

(*See* rule 10.)

Form of certificate under section 17 (3).

Whereas Mr. is in occupation of the house site specified below belonging to Mr. and whereas under the provisions of sub-section (*3*) of section 17 of the Bombay Tenancy and Agricultural Lands Act, 1948, Mr. was required to deposit and has deposited Rs. (in words) for the transfer of the said site to him; it is hereby certified that the said site shall be deemed to have been transferred to Mr. under the provisions of sub-section (*3*) of section 17 of the said Act.

Description of house site.

District.	Taluka.	Village.	Survey No.	Pot-Hissa No.	Area.	Boundaries.
					A. g.	

Signature.

President, Agricultural Lands Tribunal.

Place—

Date—

FORM V.

(*See* rule 11.)

Application under section 20 for an adjudication of right to the produce of trees naturally growing on the land or apportionment of such produce.

To

The Mamlatdar of

Name of applicant

Age. Profession. Place of residence.

Name of opponent

Age. Profession. Place of residence.

Sir,

I am the tenant/landlord and the opponent is the landlord/tenant of the following land :—

Survey No.	Pot-Hissa No.	Area	Assessment.	Village.	Taluka.
		A. g.			

The following trees have grown naturally on the said land and I am entitled to $\frac{\text{two-thirds}}{\text{one-third}}$ of the total produce thereof under the provisions of sub-section (*1*) of section 20 of the Bombay Tenancy and Agricultural Lands Act, 1948 :—

(Here give details of the trees.)

$\frac{\text{The opponant landlord objects to my}}{\text{I object to the opponant tenant}}$ enjoying the $\frac{\text{two-thirds}}{\text{one-third}}$ of the total produce of the above trees. I therefore request that the $\frac{\text{right to}}{\text{apportionment of}}$ the said produce may be determined.

The extracts of Record of Rights concerning the land are enclosed.

I enclose the following documents :—

(Here give a list of documents.)

(Names of the witnesses, if any, should be stated. It should also be stated whether they are to be summoned or whether the applicant will produce them.)

Yours faithfully,

Signature of the applicant.

Date

Counterfoil

FORM VI.

(*See* rule 12.)

Form of receipt.

District.	Taluka.	Village.	Survey No.	Pot No. or Hissa No.	Area.	Name of the field, if any.	Name of tenant	Rent agreed upon (if crop-share, rent according to appraisement) for the year.	Rent actually recovered in cash or kind.	Total rent in cash or kind recovered during the current year.
1	2	3	4	5	6	7	8	9	10	11
								For the current year. For arrears ..		

Received to-day the rent specified in column 10 from Mr.

Signature of landlord or his authorised agent.

Signature or thumb mark of tenant or his authorised agent.

FORM VI.

(*See* rule 12.)

Form of receipt.

District.	Taluka.	Village.	Survey No.	Pot No. or Hissa No.	Area.	Name of the field if any.	Name of tenant.	Rent agreed upon (if crop-share, rent according to appraisement) for the year.	Rent actually recovered in cash or kind.	Total rent in cash or kind recovered during the current year.
1	2	3	4	5	6	7	8	9	10	11
								For the current year. For arrears ..		

Received to-day the rent specified in column 10 from Mr.

Signature of landlord or his authorised agent.

Date

FORM VII.

(*See* rule 13.)

Form of application for possession under section 29.

To

The Mamlatdar of

Name of applicant

Age. Profession. Place of residence.

Name of opponent

Age. Profession. Place of residence.

Sir,

I do hereby state that I am entitled to the possession of the property, namely :—

Name of village.	S. No.	Pot Hissa No.	Area.	Assessment.	Name of landlord.
			A. g.		

in the following circumstances :—

(Here state the circumstances in full.)

The property is at present in the possession of the opponent. I apply that possession of the property be handed over to me at an early date.

The extracts of Record of Rights concerning the land are enclosed.

I also enclose the following documents :—

(Here give a list of the documents).

(Names of the witnesses, if any, should be stated. It should also be stated whether they are to be summoned or whether the applicant will produce them.)

Yours faithfully,

Date Signature of the applicant.

FORM VIII.

(*See* rule 15.)

Form of certificate under section 32 (5).

Whereas Mr. is the protected tenant of the land specified below belonging to the landlord Mr. and whereas under the provisions of sub-section (*4*) of section 32 of the Bombay Tenancy and Agricultural Lands Act, 1948, the protected tenant Mr. was required to deposit and has deposited Rs. (in words) as the price of the said land ; It is hereby certified that the said protected tenant Mr. shall be deemed to be the purchaser of the said land under the provisions of sub-section (*5*) of section 32 of the said Act.

Description of the land.

District.	Taluka.	Village.	S. No.	Pot Hissa No.	Area.	Assessment.	Boundaries.

Signature.

Place.
Date

President, Agricultural Lands Tribunal.

FORM IX.

(*See* rule 17.)

Form of application for the exchange of protected tenancies under section 33(1).

To
The Mamlatdar of
We

Name.	Age.	Place of residence.
(1)		
(2)		

protected tenants of the following lands do hereby apply for the exchange of the tenancies thereof by mutual agreement :—

Land held by applicant No. 1.

Name of village.	S. No.	Pot Hissa No.	Area.	Assessment.	Name of the landlord and his place of residence.	Details of rent payable to the landlord.
			A. g.			

Land held by applicant No. 2.

Name of village.	S. No.	Pot Hissa No.	Area.	Assessment.	Name of the landlord and his place of residence.	Details of rent payable to the landlord.
			A. g.			

The exchange of tenancies may please be sanctioned.
The extracts of the Record of Rights concerning the lands are enclosed.

Yours faithfully,

Date

Signatures of the applicants.

FORM X.

(*See* rule 19.)

Form of certificate under sub-section (2) of section 33.

Whereas the protected tenants—

(1) Mr. residing at

(2) Mr. residing at

applied for the exchange of tenancies in respect of the following lands held by them as protected tenants :—

Taluka.	Village.	Survey No.	Pot Hissa No.	Area. A. g.	Assessment.	Name of the landlord.	Details of rent payable to the landlord.	Names of protected tenants.

and whereas after holding an enquiry as required by sub-section (*2*) of section *33*, I have sanctioned the exchange of the tenancies, I hereby certify that the said tenancies shall be deemed to have been exchanged with effect from the date of this certificate, subject to the terms and conditions mentioned in rule 18 of the Bombay Tenancy and Agricultural Lands Rules, 1949.

Given under my hand and seal, this day of 19 .

Signature.

Mamlatdar of

FORM XI.

(*See* rule 20.)

Form of application for apportionment of rent under section 34 (3).

To

The Mamlatdar of

Name of the applicant.

Age. Profession. Place of residence.

Name of the opponent.

Age. Profession. Place of residence.

Sir,

I am the landlord of the following lands :—

Survey No.	Pot-Hissa No.	Area. A. g.	Assessment.	Village.	Taluka.

The opponent was the tenant of these lands and was paying the following rent for these lands :—

(Here give details of rent.)

I have terminated his tenancy in respect of the following lands under section 34 and obtained their possession under an order of the Mamlatdar under section 29 :—

Survey No.	Pot-Hissa No.	Area. A. g.	Assessment.	Village.	Taluka.

The opponent has thus now in his possession the following of my lands :—

Survey No.	Pot-Hissa No.	Area. A. g.	Assessment.	Village.	Taluka.

I am prepared to accept the following rent for the above lands remaining in his possession :—

(Here give the rent acceptable.)

I request you to apportion the rent payable for the above land in his possession.

The extracts of the Record of Rights concerning the lands are enclosed.

I also enclose the following documents :—

(Here give a list of the documents.)

(Names of the witnesses, if any, should be stated. It should also be stated whether they are to be summoned or whether the applicant will produce them.)

Yours faithfully,

Date. Signature of the landlord.

FORM XII.

(*See* rule 21.)

Form of application for determination of compensation under section 41 (1).

To

The Mamlatdar of

Name of the applicant.

Age. Profession. Place of residence.

Name of the opponent.

Age. Profession. Place of residence.

Sir,

I am the protected tenant and the opponent is the landlord of the following land:

Survey No.	Pot Hissa No.	Area A. g.	Assessment.	Village.	Taluka.

My tenancy has been terminated by the landlord under the provisions of the Bombay Tenancy and Agricultural Lands Act, 1948. I have made the following improvements on the above land. (Here give details of the improvements made).

I request that the improvements made by me and their value should be ascertained and the compensation payable by the opponent for these improvements assessed and paid to me.

The extracts of the Record of Rights concerning the land are enclosed.

I also enclose the following documents :

Here give a list of the documents.

(Names of the witnessess, if any, should be stated. It should also be stated whether they are to be summoned or whether the applicant will produce them.)

Yours faithfully

Signature of the Applicant.

Date.

FORM XIII.

(*See* rule 26.)

Form of making an offer for sale of land under section 64 (2).

To

Sir,

I am the landlord of the following land :—

Survey No.	Pot Hissa No.	Area. A. g.	Assessment.	Village.	Taluka.

I intend to sell this land, the reasonable price of which as determined by the Agricultural Lands Tribunal under sub-section (*1*) of section 64 of the Bombay Tenancy and Agricultural Lands Act, 1948, is Rs. (in words).

As required by sub-section (*2*) of section 64 of the said Act, I offer this land for sale to you. If you intend to purchase the land you should either pay the above sum to me or deposit it with the Agricultural Lands Tribunal within two months of the receipt of this offer. If you do not intend to purchase the land please inform me accordingly in writing within the said period of two months.

Yours faithfully,

Signature of the landlord.

Date 19

THE SCHEDULE.

[*See* rule 10 (2).]

Value determined. (1)	Scale of fees. (2)
When the value of the house-site does not exceed Rs. 1,000.	2½ per cent. of the value subject to a minimum of Rs. 2.
When the value of the house-site exceeds Rs. 1,000, but does not exceed Rs. 5,000.	For the first Rs. 1,000, 2½ per cent. For the amount in excess of Rs. 1,000, 1 per cent.
When the value of the house-site exceeds Rs. 5,000.	For the first Rs. 1,000, 2½ per cent. For the amount in excess of Rs. 1,000 and up to Rs. 5,000, 1 per cent. For the amount in excess of Rs. 5,000, ½ per cent. *Note.*—Any fraction of a hundred rupees of Rs. 51 or more shall be treated as one hundred rupees and any such fraction below Rs. 51 shall be ignored for calculating the percentage of the value.

G. N., R. D., No. 870/49-F, dated 31st October 1949 (B. G., Pt. IV-B, p. 2002). S. 83.

In exercise of the powers conferred by section 83 of the Bombay Tenancy and Agricultural Lands Act, 1948 (Bom. LXVII of 1948), the Government of Bombay is pleased to delegate to the Collectors, the Assistant Collectors and the Deputy Collectors within their respective jurisdictions the powers conferred on the State Government under section 65 of the said Act.

S. 88(2) **G. N., R. D., No. 828/49, dated 14th July 1949 (B. G., Pt. IV-B, p. 1516).**

In exercise of the powers conferred by sub-section (*2*) of section 88 of the Bombay Tenancy and Agricultural Lands Act, 1948 (Bom. LXVII of 1948), the Government of Bombay is pleased to direct that notwithstanding anything contained in sub-clause (*a*) of sub-section (*1*) of section 88 of the said Act, lands held on lease from Government but sub-let by lessees shall not be exempt from any of the provisions of the said Act.

THE BOMBAY HOUSING BOARD ACT, 1948 (BOM. LXIX OF 1948).

G. N., Lab. D., No. 436/43-IV, dated 11th January 1949 (B. G., Pt. I, p. 96). S. 2 (4).

In exercise of the powers conferred by clause (4) of section 2 of the Bombay Housing Board Act, 1948 (Bom LXIX of 1948), the Government of Bombay is pleased to direct that the commodities and articles specified in the schedule hereto shall be the building materials for the purposes of the said Act.

Schedule.

1 Cement.
2. Bricks.
3. Iron and Steel.
4 Sand.
5. Rice husk.
6. Tiles (Mangalore Pattern).
7. Asbestos Cement Sheets.
8. Timber.
9. Lime.

G. N., Lab. D., No. 496/48, dated 29th March 1949 (B. G., Pt. IV-B, p. 878). S. 66

In exercise of the powers conferred by section 66 of the Bombay Housing Board Act, 1948 (Bom. LXIX of 1948), the Government of Bombay is pleased to make the following rules, namely :— **Bombay Housing Board Rules, 1949.**

1. *Short title.*—These rules shall be called the Bombay Housing Board Rules, 1949.

2. *Definitions.*—In these rules, unless there is anything repugnant in the subject or context,—

(*a*) " Act " means the Bombay Housing Board Act, 1948 ;
(*b*) " Form " means a form appended to these rules ;
(*c*) " Section " means a section of the Act.

3. *Remuneration, leave, etc. of the Chairman.*—(1) The Chairman of the Board shall be entitled to—

(*a*) a salary of Rs. 3,000 per month, and

(*b*) a travelling allowance admissible to the Head of a Government Department.

(2) The chairman shall be entitled to leave on full pay on the basis of one month per year of service.

(3) Notwithstanding anything contained in this rule, in the case of Mr. S. H. Gidwani, the first Chairman, no salary shall be paid to him, but he shall be entitled to leave on the basis of one month per year of service and shall, instead of the salary, be provided with—

(*a*) a furnished residential accommodation, without payment of rent or any assessment, tax, rate or cess due to Government or any local authority ;

(*b*) a motor car and an allowance for the maintenance of the motor car at the rate of Rs. 200 per month.

(4) Mr. S. H. Gidwani shall also be entitled when on tour to a daily allowance in accordance with rule 4 of the Rules in section I of Appendix XLII-B to Bombay Civil Services Rules.

4. *Allowances of Members.*—A member of the Board other than the Chairman shall be entitled to an allowance of Rs. 40 for every day of a meeting of the Board that he attends. He shall also be entitled to travelling allowance admissible to First Class Government Officers.

5. *Delegation of powers to sanction contracts.*—The Board's powers to sanction contracts may be delegated to the Housing Commissioner or any other officers under section 21, subject to the following limits, namely :—

(*a*) the maximum limit of ten lakhs of rupees for any contract where delegation of power is to the Housing Commissioner ;

(*b*) the maximum limit of five lakhs of rupees for any contract where delegation of power is to an Assistant Housing Commissioner ;

(*c*) the maximum limit of one lakh of rupees where delegation of power is to an Executive Engineer ;

(*d*) the maximum limit of ten thousand rupees where delegation of power is to a Deputy Engineer, and three thousand rupees where delegation of power is to an officiating Deputy Engineer.

6. *Manner and form of contract.*—(1) Every contract for the execution of any work or the supply of any materials or goods, which involves an expenditure exceeding one thousand rupees shall be in writing and shall be sealed.

(2) The common seal of the Board shall remain in the custody of the Secretary and shall not be affixed to any contract or other instrument except in the presence of a member (other than the Chairman) who shall attach his signature to the contract or instrument in token that the same was sealed in his presence.

(3) The signature of the said member shall be in addition to the signature of any witness to the execution of such contract or instrument.

(4) If forms for contracts are prescribed in the Bombay Public Works Department Manual, the said forms may, as far as practicable, be adopted for like contracts of the Board provided that the Board shall have power to make additional conditions in the forms of contract if the Board desires to do so.

7. *Form of housing programme.*—The annual housing programme shall be prepared in Form I.

8. *Form of schedule of staff.*—The schedule of the staff of officers and servants already employed and to be employed during the next year shall be prepared in Form II.

9. *Form of budget.*—The budget for the next year shall be prepared in accordance with the forms given in the Bombay Budget Manual.

10. *Publication of draft programme.*—The draft of the programme referred to in section 27 shall be published in the Official Gazette and also in at least two newspapers having circulation in the region to which the programme pertains.

11. *Maintenance of accounts.*—The accounts of the Board shall be prepared and maintained in accordance with the Public Works Account Code, Bombay.

FORM I.

(*See* rule 7.)

The Form of Annual Housing Programme.

S. No.	General title of work.	Approximate cost of work.	Short description and scope of the proposed work.

The form of annual housing programme shall be divided into two sub-sections :

(*a*) Particulars of Housing Schemes.

(*b*) Particulars of any undertaking for the purpose of production of building materials.

FORM II.

(*See* rule 8.)

Schedule showing the provision made in the Budget Estimate for the year for the staff.

Serial No.	Name of Office.	No. of persons—Gazetted Officers	Pay of officers.	Conveyance Allowance to Gazetted officers.	No. of persons—Non-Gazetted Officers.	Pay of Establishment.
1	2	3	4	5	6	7

Allowances and Honoraria.							
Conveyance Allowance to Non-Gazetted Officers.	Travelling Allowance ordinary.	Dearness Allowance.	Compensatory Local Allowance.	House Rent Allowance.	Total of cols. 8 to 12	Contingencies.	Remarks.
8	9	10	11	12	13	14	15

THE BOMBAY CHILDREN ACT, 1948 BOM. LXXI OF 1948).

[1]G. N., H. D., No. 6978/3, dated 27th March 1936 (B. G., Pt. IV-A, p. 377).

S. 109.

Bombay Children and Juvenile Courts Rules, 1936.

Amended by G. N., H. D., No. 6978/3-II, dated 7th September 1936.
Amended by G. N. H. D. No. 6978/3-VI, dated 3rd October 1938.
Amended by G. N.. H. D.. No. 9180/3-II, dated 7th November 1938.
Amended by G. N., H. D.. No. 9180/3-II, dated 1st May 1939.
Amended by G. N., H. D., No. 6978/3-VI dated 24th January 1940.

In exercise of the powers conferred by sections 46 and 52 of the Bombay Children Act, 1924 (Bom. XIII of 1924) (hereinafter referred to as the said Act), and with the previous approval of the Governor General in Council, the Governor in Council is pleased, in supersession of the Government Notifications* in the Home Department specified in the margin, to make the following rules for the purpose of carrying into effect the provisions of the said Act, namely :—

*No. 221/XIV, dated the 21st December 1926.
No. 962/2-III, dated the 14th June 1927.
No. 3925/3-II, dated the 20th September 1934.
No. 7838/2, dated the 12th March 1935.
No. 4965/3, dated the 6th August 1935.
No. 5943/3, dated the 25th October 1935.
No. 5894/3, dated the 9th December 1935.

1. *Short title.*—These rules may be called the Bombay Children and Juvenile Courts Rules, 1936.

2. *Interpretation.*—In these rules—

(1) "Act" means the Bombay Children Act, 1924 ; and

(2) "Section" means a section of the Act.

3. *Certification of institutions.*—If the managers of any institution not certified under sub-section (*2*) of section 34 desire that the institution should be so certified they shall make a written application in this behalf to the Chief Inspector who shall call the institution to be inspected and shall make a report to the State Government regarding the provision made in the institution for the boarding, lodging, and general health of the inmates, and the quality of the literary and industrial training made available.

4. *Registers to be maintained by certified schools.*—The Chief Inspector shall, subject to he general control of the State Government prescribe the registers and record to be maintained by the managers of a certified school in respect of children committed to such school.

5. *Inspection Board.*—The Inspecting Agency for the inspection of certified schools and institutions under sub-section (*1*) of sections 36 and 45 shall be as follows :—

(1) Chief Inspector.

(2) Inspectors.

6. *Chief Inspector.*—The Backward Class Officer shall be the Chief Inspector. He may visit any certified school at any time, hear any complaints of the inmates, and make suggestions to the Managers of the School.

[1] The Bombay Children and Juvenile Courts Rules, 1936, published in this notification have been saved under section 110 of the Bombay Children Act, 1948 (Bom. 71 of 1948).

7. *Appointment and duties of Inspectors.*—The State Government may from time to time appoint any person to be an Inspector of Certified Schools for any area and the person so appointed shall thereafter work in that capacity under the orders of the Chief Inspector. He shall, at least once a year, inspect all parts of each certified school and see every child or youthful offender confined in it. He shall during his inspection give everyone the opportunity of making any application or complaint to him which such child or youthful offendr may wish to make. A brief memorandum of the state in which he finds the school and the manner in which it is administered together which any suggestions he may wish to make, shall, on the occasion of each inspection, be recorded by him in the Visitors' Book.

Each Inspector of Certified Schools shall submit to the Chief Inspector an annual report on the working and progress of certified schools within his jurisdiction.

8. *Educational Inspection.*—In addition to the Inspectors appointed under rule 7 the Government Educational Inspector of each division shall also be an Inspector of Certified Schools within his division for carrying out purely educational inspection. He shall receive through the Director of Public Instruction such directions as the Chief Inspector may consider it necessary to give him and shall submit his reports of inspection of certified schools to the Chief Inspector through the Director of Public Instruction.

Each such Inspector shall inspect the premises of each certified school within his jurisdiction, see the children and youthful offenders, and hear their complaints at least once in six months. He shall annually examine the literary classes of each such school with the help, if necessary, of the ordinary Educational Inspecting Officers, and shall satisfy himself that all the accounts and registers are maintained according to the rules for the time being in force and that proper arrangements are made for the safe custody of all records. He shall record in the Visitors' Book a brief memorandum of the state in which he finds the school and of the manner in which it is adminstered, together with any suggestions he may wish to make and submit annually to the Director of Public Instruction an inspection report on each school. The Director of Public Instruction will forward such report to the Chief Inspector.

9. *Inspection of Certified Schools for girls.*—Certified Schools which are meant for girls only shall be inspected only by the Chief Inspector or by an Inspectress to be nominated by him.

10. *Inspection of Industrial Classes.*—The industrial Classes attached to certified schools shall be examined by the Committee of Direction for Technical Education which will submit an Inspection Report to the Chief Inspector through the Inspector of Certified Schools, if any.

11. *Detention of juveniles not released on bail after arrest.*—When a child is arrested and is not released on bail under the provisions of section 18 or otherwise, he shall be detained in a certified school or place of safety. If no certified school or place of safety is available, such child may be detained at a police-station but in any case apart from adult prisoners :

Provided that, if the child be a girl, such girl shall be forwarded with the least possible delay to a Court empowered to pass an order under section 20. The fact of the arrest and detention shall be forthwith communicated to the parent or gurdian of the child and also to the Probation Officer of the Court exercising juvenile court jurisdiction in the area of the Police station.

12. *Remand or committal of juveniles to custody,*—(1) When a child is remanded or committed for trial under the provisions of section 20, he shall, unless the charge be one of culpable homicide or any other offence punishable with death or transportation, be detained in a certified school or place of safety. Where no certified school or place of safety is available such child may be detained in Jail or Sub-jail, but apart from adult prisoners.

(2) If the charge be one of cuplable homicide or any other offence punishable with death or transportation, such child instead of being detained in the manner prescribed in sub-rule (1) shall be confined, in the city of Bombay in the absence of any general or special orders that the Chief Presidency Magistrate may make to the contrary, in the House of Correction, Bombay, and elsewhere, in the absence of any general or special orders that the District Magistrate may make to the contrary, in the nearest jail, but in any case in a separate cell apart from adult prisoners.

13. *Inspection of a place of safety.*—(1) Any place of safety in the City of Bombay in which a child is detained under rule 11 or 12 shall be open to inspection by the Chief Presidency Magistrate, Bombay, or any magistrate deputed by the Chief Presidency Magistrate ; and elsewhere, it shall be open to inspection by the District Magistrate or any magistrate deputed by the District Magistrate.

(2) The occupier or manager of such place of safety shall give every facility to the Probation Officer who visits the child for the purpose of making enquiries into his case.

(3) The occupier or manager of such place of safety may be paid such remuneration as the Chief Presidency Magistrate, Bombay, or the District Magistrate, as the case may be, may decide.

14. *Constitution and procedure of juvenile Courts.*—(*a*) Every Juvenile Court established under sub-section (*1*) of section 46 shall consist of a salaried Presidency Magistrate in the City of Bombay or a salaried First Class Magistrate elsewhere sitting singly or with such Honorary Magistrates not exceeding two in munber as may be specially appointed for this purpose by the State Government, provided that in the absence of any one or both of the Honorary Magistrates, it shall be competent for the salaried Magistrate sitting singly or with the Honorary Magistrate who amy be present, as the case may be, to exercise all or any of the powers of a Juvenile Court.

(*b*) In case of disagreement between the members of the Bench [illegible] the Juvenile Court, the opinion of the salaried Magistrate shall prevail.

(*c*) Subject to the control of the State Government, the Chief Presidency Magistrate, Bombay, may from time to time determine from the list of salaried Presidency Magistrates an Honorary Lady Presidency Magistrate appointed as Juvenile Court Magistrate for the City of Bombay and elsewhere, the District Magistrates may similarly detrmine from the list of salaried First Class Magistrates and Honorary Magistrates appointed as Juvenile Court Magistrates for the district, the person or persons who shall sit in the Juvenile Court or Courts and the time when and the place at which the Juvenile Court or Courts shall sit.

15. *Proceeding of the Juvenile Court.*—(*a*) The public generally shall not have any access to, or be or remain in, any room or building used as a Juvenile Court ; but the Court may, at its discretion, permit any person to be present during the

whole or part of the proceedings of a case. No report of any proceedings of the Court shall be published without the Court's permission ; and no such report, when permitted, shall mention the name of the child involved.

(*b*) Subject to the provisions hereinafter appearing, the procedure prescribed by the Criminal Procedure Code for the trial of summons cases, and for recording evidence therein shall be followed in hearing all cases against children under the Act :

Provided that when a child and a person who is not a child, are charged together with an offence triable under the Code of Criminal Procedure exclusively by a Court of Session, the Court may, if it thinks fit, commit the child along with such person for trial by a court of Session :

Provided that instead of recording a conviction, the Court if it finds that an offence has been committed shall record a finding to that effect.

In all such cases the proceedings shall be conducted in as simple a manner as possible and no unnecessary formality shall be observed. Care must be taken that the child accused of an offence understands the nature of the proceedings.

15A. *Medical opinion regarding age and physical and mental condition of children.*—In every case against a child, the Court shall obtain medical opinion regarding his age and his physical and mental condition ; and when passing orders in such case, shall, after taking into consideration the medical opinion and such other evidence as may be available, record a finding in respect of his age.

16. *Supply of information regarding juveniles by Courts and Police.*—(1) Whenever a court orders a juvenile to be detained in a certified school, it shall forward to the Managers of such school a copy of its judgment, if any, or orders, together with information regarding the age and address of the juvenile, if known, and any particulars of his home and previous record that may have been discovered.

(2) The officer in charge of the Police Station concerned shall, on the issue of orders by a Court for the detention of a juvenile in a certified school, forward to the Managers of such school, copies of any records he may have of the juvenile's previous history.

17. *Authorization of persons to act under section 7 or 14.*—The Commissioner of Police in the City of Bombay, and the District Magistrate elsewhere, may authorise such Police officers as they think fit, and the Chief Presidency Magistrate in the City of Bombay, and the District Magistrate elsewhere, may authorise such other persons as they think fit, to take action under sub-section (*1*) of section 7 or 14 in those places to which the provisions of these sections have been applied.

18. (*i*) *Contribution of parent or other person.*—A Court making an order under sub section (*1*) of section 28 may direct the parent or other per on liable to maintain the child or youthful offender, to pay into Court, in advance, in the beginning of each month such sum of money as the Court may think fit not exceeding Rs. 50 in the whole per mensem, towards the maintenance of such child or youthful offender.

(*ii*) *Enforcement of order as to contribution.*—When a Court has by its order under this rule directed the person liable to maintain a child or youthful offender, to pay a sum of money for the maintenance of such child or youthful offender, and such person makes default in the payment of the sum for period of one week after the expiry of the due date of payment, the Court may take action for the recovery of the same in the manner provided in section 488 of the Code of Criminal Procedure, 1898.

19. *Manner in which a child or youthful offender may be committed to the care of a parent, guardian, relative or other fit person*—

(*a*) A Court making an order committing a child or youthful offender to the care of, or allowing a child to emain in the custody of, a parent, guardian, relative or other fit person, as the case may be, under section 7, 15 or 24, may direct such parent, guardian, relative or person to enter into a bond in the form in Schedule A appended to these rules, with or without sureties, and in such um of money as the Court may think fit, to keep him under proper care and control, and to be responsible for his good behaviour. In addition to the conditions prescribed in the form in Schedule A, the Court may impose such other conditions as it may think fit for securing that the child or youthful offender, as the case may be, may lead an honest and industrious life.

(*b*) Where a child or youthful offender has been placed under the supervision of a probation officer, the Court shall impose a condition that all necessary assistance shall be rendered by the parent, guardian, relative or other person, as the case may be, to the probation officer to enable him to carry out the duties of supervision.

20. *Extension of period of order.*—A Court making a committal or supervision order under section 7, 15 or 24 in respect of a child or youthful offender may subject to the provisions of section 7, 15 or 24 as the case may be, extend the period of such committal or supervision, if in its opinion, the progress of the child or youthful offender, as the case may be, is not satisfactory.

21. *Application for recognition of societies for appointment of probation officers.*—Any society desiring to be recognised for the purpose of appointing persons to be probation officers under clause (*b*) of sub-section (*1*) of section 24A, shall apply to the State Government in writing through the Chief Inspector of Certified Schools.

21A. *Probation Officers not to employ children or youthful offenders for their private purposes.*—A Probation Officer shall not employ a child or a youthful offender placed under his supervision, for his own private purposes or take any private service from him.

22. *Conditions for release on licence under section 30 (1A).*—A youthful offender detained in a certified school shall not be released by the Chief Inspector under sub-section (*1A*) of section 30, except on the conditions prescribed in Schedule B appended to these rules.

23. *Short leave of absence to inmates of certified schools.*—(1) The Manager of a certified school may, on sufficient cause being shown to his satisfaction, grant permission in writing to an inmate to absent himself for short periods not

exceeding three days at a time subject to the maximum of nine days in a year exclusive of the time required for going to and returning from the destination, for the purpose of visiting parents or relations.

(2) The time during which an inmate is absent from the school under sub-rule (1) shall be deemed to be part of the time of his detention in the school.

(3) The permission granted under sub-rule (1) may at any time be cancelled by an order in writing by the Manager and the inmate may be recalled by him without giving any reasons therefor.

(4) If any inmate fails to return to the school at the expiry of the period permitted under sub-rule (1) or when recalled under sub-rule (3), the Manager shall report the matter to the Chief Inspector and any Police Officer, may on the application in writing of such Manager, arrest the inmate without warrant and send him back to the school.

(5) The time which elapses after the failure of an inmate under sub-rule (4) to return to the school shall be excluded in computing the time of his detention in the school.

(6) Any parent or guardian contributing towards the maintenance of his child in a ceritfied school, under an order passed by a Court under sub-section (*1*) of section 28, shall be exempt from the payment of such contribution for the period during which the child is absent from the school under sub-rule (1).

24. *Escape from a certified school or supervision.*—Any child who escapes from a certified school, or from the supervision of a society, or person under whose supervision he was directed to remain, may be arrested by any officer of Police without warrant and sent back to such certified school, society or person, as the case may be.

SCHEDULE A.

(*Rule 19.*)

Whereas I
being the parent, guardian, relative or person
in whose custody / to whose care

has been

allowed to remain / ordered to be committed

by the

juvenile court / Magistrate

, have been directed by the said

juvenile court / Magistrate to execute a bond in the sum of rupees

(Rs.), with

one surety‡ / two sureties, I hereby bind myself that on the said

being allowed to remain in my custody / committed to my care I shall have the said

---

* Here enter the name of the person to whose care the child or youthful offender is committed.
† Here enter the name of the child or youthful offender as the case may be.
‡ Omit where no surety is required.

properly taken care of and I do further bind myself to be responsible for the good behaviour of the said and to observe the following conditions for a period of years commencing from..... :—

(1) that I shall not change my place of residence without giving previous intimation in writing to the Court through the probation officer;

(2) that I shall not remove the said form the limits of the jurisdiction of the Court without previously obtaining the written permission of the Court;

(3) that I shall send the said *daily to school / to such daily work as is approved by the Court, unless prevented from so doing by circumstances beyond my control;

(4) that I shall report immediately to the Court through the probation officer if the said misbehaves or absconds from my custody;

(5) that I shall produce the said before the Court whenever so required by the Court;

†(6) that I shall render all necessary assistance to the probation officer to enable him to carry out the duties of supervision.†

( ) ‡

( ) ‡

( ) ‡

§(7) In the event of my making default herein, I bind myself to forfeit to the State Government the sum of rupees (Rs.).

Dated this the day of 19

Before me,

(Signed)

Signature of person executing the bond.

(Where a bond with sureties is to be executed add)

I/We of in the taluka of in the district of hereby declare myself surety / ourselves sureties for the aforesaid

* To be retained in the case of a child or youthful offender of school age.
† These words should be omitted if the supervision by a probation officer has not been ordered.
‡ Here enter additional conditions, if any, imposed by the Court numbering them properly.
§ To be renumbered where necessary.

that he shall do and perform all that he has undertaken to do and perform and in case of his making default therein, I/we hereby bind myself / ourselves jointly and severally to forfeit to the State Government the sum of rupees (Rs.).

Dated this the day of 19

In the presence of

Before me,

(Signed)

SCHEDULE B.

Form of order of release on licence (vide *rule 22*).

I, Chief Inspector of Certified Schools, State of Bombay, do by this licence permit son / daughter of caste residence number who was ordered to be detained in a certified school by the Court under section of the Bombay Children Act, 1924 (Bom. XIII of 1924), for a term of on the day of 19 , and who is now detained in the school at

to be discharged from the said school on condition that he / she be placed under the care, supervision and authority of during the remaining portion of the aforesaid period of detention.

This licence is granted subject to the conditions endorsed hereon, upon the breach of any of which it shall be liable to be revoked.

Chief Inspector of Certified Schools, State of Bombay.

Dated the

Conditions.

(1) The licensee shall proceed to and live under the authority of the Secretary, Bombay Presidency Borstal Association / *Society / A.B. until the expiry of the period of his / her detention unless the remission is sooner cancelled.

* Where necessary this may be struck off and the name of any society or person approved by the Chief Inspector may be entered.

(2) He/She shall not, without the consent of the said, Secretary/Society/A.B. remove himself/herself from that place or any other place which may be named by the said Secretary/Society/A.B.

(3) He/She shall obey such instructions he/she may receive from the said Secretary/Society/A.B. with regard to punctual and regular attendance at employment or otherwise.

(4) He/She shall abstain from committing any offence and shall lead a sober and industrious life to the satisfaction of the said Secretary/Society/A.B.

(5) In the event of his/her committing a breach of any of the above conditions, the remission of the period of detention hereby granted shall be liable to be cancelled and on such cancellation he/she shall be dealt with under sub-section (*3*) of section 30 of the Bombay Children Act, 1924.

I hereby acknowledge that I am aware of the above conditions which have been read over/explained to me and that I accept the same.

(Signature or mark of the licensee.)

Certified that the conditions specified in the above order have been read over/explained to (name)
and that he/she has accepted them as the conditions upon which the remission of the period of detention has been granted to him/her and that he/she has been released accordingly on the 19

Signature and designation of the certifying authority
(i.e., Superintendent of the School).

THE BOMBAY KHAR LANDS ACT, 1948 (BOM. LXXII OF 1948).

G. N., R. D., No. 10558/45, dated 31st December 1949 (B. G., 1950, Pt. IV-B, p. 1). **S. 46.**

Bombay Khar Lands Rules, 1949.

In exercise of the powers conferred by section 46 of the Bombay Khar Lands Act, (Bom. LXXII of 1948), the Government of Bombay is pleased to make the following rules, namely :—

1. *Short title.*—These rules may be called the Bombay Khar Lands Rules 1949.

2. *Definitions.*—In these rules, unless there is anything repugnant in the subject or context,—

(*a*) " Act " means the Bombay Khar Lands Act, 1948 ;
(*b*) " Form " means a form appended to these rules ;
(*c*) words and expression used but not defined in these rules shall have the meanings assigned to them in the Act.

3. *The manner of electing panel of representatives by landlords and tenants of a unit.*—(1) Whenever an election of representatives is to be made under sub-section (*3*) of section 3 of the Act, the Mamlatdar, or any officer authorised by the Board shall cause a written notice in Form I, stating the date on which and the place and time at which the election shall be held. The notice shall be published in the regional language of the villages concerned by affixing copies thereof at the village chavdi or at the village panchayat office or at any other public place appointed by him in this behalf, not less than fifteen days before the date fixed for the election. Such notice shall also be given in the villages concerned by beat of drum on the day immediately preceeding the day fixed for holding the election inviting all landlords and tenants of lands in the unit concerned to be present on such day and at the time and place fixed for the election.

(2) The Mamlatdar or the officer authorised by the Board in this behalf shall preside at the meeting of the persons assembled in response to the notice given under sub-rule (1). The Mamlatdar or such officer, as the case may be, shall then prepare a list of the persons so assembled.

(3) The presiding officer shall then call upon all the candidates who seek election to state their names to him. He shall then ascertain whether the said candidates possess the qualifications specified in rule 4. If any of the candidates does not possess the qualifications specified in rule 4, his name shall be excluded. He shall prepare a list of persons duly qaulified to contest the election.

(4) At any time before the name of the first candidate is put to vote, a candidate may withdraw his candidature.

(5) If the number of candidates who have not withdrawn their candidature as aforesaid is equal to the number of members to be elected, the presiding officer shall forthwith declare such candidates to be duly elected.

(6) If the number of such candidates is greater than the number of members to be elected, the presiding officer shall read the names of the candidates, state the the number of members to be elected and explain to the landlords and tenants present at the meeting that they have to give only as many votes as there are representatives to be elected and that no person proposed as a representative shall be given more than one vote.

(7) The name of every such candidate shall be put to vote separately by show of hand

(8) The candidate or candidates shall be declared elected in the order of the number of votes secured by each of them.

(9) When an equality of votes is found to exist between any candidates who are willing to take office, and the addition of one vote will entitle any of the candidates to be declared elected, the determination of the person or persons to whom such one additional vote shall be deemed to have been given shall be made by lot to be drawn in the presence of the presiding officer and in such manner as he shall determine.

(10) The presiding officer shall report the result of the election to the Board.

Explanation.—For the purposes of this rule, if there is only one unit in a district there shall be elected three representatives for the unit. If there are two units in a district, there shall be elected two representatives for each of the units ; and if there are more than two units in a district, there shall be elected one representative for each of such units.

4. *Qualifications to be possessed by non-official members of the Board.*—A member other than an ex-officio member shall possess the following qualifications :—

(*a*) he should be over thirty and under sixty years of age ;
(*b*) he must have passed at least the vernacular fourth standard examination.

5. In addition to the construction, maintenance and preparation of embankments, the Board may prepare schemes for the following objects also—

(*a*) determining a purpose for which the reclaimed lands could most profitably be used,
(*b*) controlling and maintaining tree growth including marsh-bushes to prevent erosion of embankments,
(*c*) assigning suitable areas from which materials required for construction and repairs for embankments may be derived.

6. *The other objects for which a scheme may be prepared.*—In addition to the particulars specified in clauses (*i*) to (*vi*) of sub-section (*2*) of section 12, a scheme prepared may also contain the following particulars, namely :—

(*a*) the purposes for which the reclaimed land could profitably be used ;
(*b*) the approximate value of the land before and after its reclamation ;
(*c*) the estimated yield of the land before and after its reclamation ;
(*d*) the approximate amount required to be contributed per acre of land by persons affected by the scheme.

7. *The period within which the Board is to submit the draft scheme.*—The Board shall submit the draft scheme to the State Government under sub-section (*1*) of section 15 within three months from the date of its publication under sub-section (*1*) of section 13 :

Provided that the State Government may, if it thinks fit, extend such period for a further period not exceeding three months on the application of the Board in that behalf.

8. *The period within which the State Government may sanction the draft scheme.*—The State Government shall, within three months from the date of the submission of the scheme to the State Government under sub-section (*1*) of section 15, either sanction the scheme with or without modification and subject to such conditions as it may think fit to impose or refuse to give sanction to the scheme.

9. *Execution of a scheme.*—(1) After a scheme has come into force under section 16, the Board shall appoint an officer to execute it.

(2) Such officer shall send a notice in Form II to every landlord and tenant to pay his share of the contribution towards the cost of the scheme and in the case of Government lands affected by the scheme to the Collector, to pay the share of the contribution of Government in the proportion specified in sub-section (*2*) of section 25 within one month from the date of the service of the notice. The notice shall specify the amount due which shall be paid to such officer :

Provided that the contribution of 20 per cent. leviable under the second proviso to sub-section (*2*) of section 25 may be levied from the tenants and to the extent of the same percentage from the owners in the form of labour :

Provided further in cases where it is agreed that the contribution shall be leviable in the form of labour, an omission on the part of persons to provide such labour shall be deemed to be default in payment of the contribution.

(3) If the landlord and tenants liable to pay the contribution make default in the payment thereof or in providing for labour, the officer shall proceed to take steps to recover the amount as provided in section 40 of the Act.

(4) The officer shall proceed to execute the scheme under the directions of the Board as soon as the amount of contribution of not less than 50 per cent. of the total amount payable by the landlords and the tenants has been recovered.

10. *Disposal of lands forfeited under section 30.*—Where any lease of land has been determined by forefeiture to the State Government for non-payment of contribution under section 30 of the Act such land shall be disposed of in accordance with provisions of the Bombay Land Revenue Code, 1879, and the rules made thereunder.

11. *The manner of constituting a committee for each unit.*—The Board may nominate not more than five persons out of the landlords and tenants whose lands are included in the scheme to form a Committee under section 19.

12. *Matters connected with the acquisition of land, right or interest under section 20.*—For the purposes of the enforcement of the provisions of the Land Acquisition Act, 1894 (hereinafter referred to as the said Act) for the acquisition of any land under section 20 the following procedure shall be observed :—

(*a*) After the land proposed to be acquired has been marked out, measured and planned under section 8 of the said Act, the Collector shall send to the Board a statement showing the approximate cost of the acquisition of the land.

(*b*) On receipt of the statement under clause (*a*), the Board shall deposit with the Collector the amount of the cost shown in the statement.

(*c*) After an award made by the Collector has become final under section 12 of the said Act, the Collector shall send a copy thereof to the Board, and unless a reference is made to a Court under section 18 of the said Act, the Collector shall take possession of the land (if not already taken under section 17 of the said Act) and inform the Board of it and of the actual amount of the cost of the acquisition and of the amount, if any, remaining surplus out of the amount deposited with him under clause (*b*). The Board shall then arrange to take back the surplus amount, if any, and to take possession of the land. Where possession of land is taken by the Collector under section 17 of the said Act, before an award is made under section 11 of the said Act, the Collector shall give immediate intimation of it to the Board, in order to enable the Board to take immediate possession of the land from the Collector.

(*d*) If a reference is made to a Court under section 18 of the said Act, the Collector shall inform the Board of it and deposit the amount deposited with him under clause (*b*) in the Court. When the matter is finally decided by the Court, the Collector shall intimate to the Board the decision of the Court, as also the additional amount, if any, that the Board has to pay in view of the Court's decision. The Board shall then pay the additional amount, if any, to the Collector or to the Court, as may be required.

13. *Manner of granting licence and levy of fees under section 24.*—(1) A person desiring to obtain a licence under section 24 shall apply to the Board or an officer duly authorised by it in this behalf.

(2) The licence shall be granted in Form III on payment of a fee of Rs. 5 and subject to all or any of the following conditions in addition to those which may be specified in the licence having regard to the circumstances of a particular case :—

(*a*) The licensee shall not fish within 50 feet on either side of the embankment in the tidal or Khar land, as the case may be, except in drainage channels.

(*b*) The licensee shall not cause damage to or in any way interfere with any of the said embankments.

(*c*) The licensee shall not fish or exercise his right of fishery in any water on the tidal or khar land to which the licence relates for such period or on such days as may be required by the Board or the officer authorised under sub-rule (1).

(*d*) The licensee shall not object to draining off such water as and when necessary for the purpose of any scheme under the Act.

(*e*) If the licensee, while fishing or exercising the right of fishery in any water on the tidal or khar land to which the licence relates, causes any damage to any scheme of the Board under the Act, the licensee shall be liable to pay the cost of the damage caused by him to the scheme. If the licensee fails to pay it, it shall be recoverable as an arrear of land revenue.

(*f*) The licence shall be liable to be cancelled at any time, if the holder thereof commits breach of any of its conditions or if in the opinion of the Board it should be cancelled for any other cause.

14. *Open licence to fish.*—The Board may by a general notice license persons to fish in their own lands by means of hand nets.

15. *The period within which an application for a loan may be made.*—The application for a loan under section 26 of the Act shall be made within one month from the date of receipt of a notice under sub-rule (2) of rule 9.

16. *Grant of loan under section 27.*—(1) If the security proposed to be furnished for the grant of the loan is land, the applicant shall also forward the extracts from the record of rights relating to such land along with the application made under section 26 of the Act.

(2) If the applicant has no land, he shall furnish a solvent surety.

(3) Interest shall be charged on the loan at the rate of 3¼ per cent. per annum.

(4) The loan shall be repayable in such instalments, not exceeding six, as the State Government may, having regard to the financial condition of the applicant, determine in each case.

(5) No loan shall be granted unless the applicant executes a bond in Form IV-A or IV-B, as the case may be.

17. *Levy of annual contribution and the manner of levying it.*—(1) The annual contribution payable under section 31 shall be fixed by the State Government after consultation with the Board and shall be declared in the notification published in the Official Gazette.

(2) The annual contribution payable by the landlords and tenants shall be in the proportion of one-third and two-thirds respectively:

Provided that such contribution payable by the landlords and the tenants belonging to the Adiwasi class in the Thana District shall be in the proportion of one-fourth and three-fourths, respectively.

(3) The annual contribution shall be levied in the form of Khar Bandist Akar and be paid along with land revenue as a land revenue demand.

18. *Forms of Accounts.* -(1) The accounts of the Board shall be maintained in Forms V, VI and VII.

(2) The accounts shall be audited annually by Government auditors on the same terms and conditions, if any, subject to which they audit the local fund accounts.

19. *The manner in which and the purposes for which balances of funds are to be expended.*—The balances of the fund and the interest accuring thereon shall be expended for the following purposes, namely:—

(*i*) the preparation of the scheme;

(*ii*) the maintenance of, and carrying out repairs to, any embankments included in a scheme;

(*iii*) payment to the State Government in respect of cost on account of pay, pension, leave and other allowances of the officers and servants appointed under the Act;

(*iv*) meeting all other incidental charges for the conduct of business of the Board and the discharge of its duties specified in the Act;

(*v*) defraying the cost of audit of the accounts.

20. *Notice under section 41*:—The notice to be given to the owner or occupier or other person interested in any land under section 41 shall be in Form VIII.

21. *Manner in which the documents, plans and maps relating to the sanctioned scheme are accessible to the public.*—The documents, plans and maps relating to a scheme which has come into force shall be open for public inspection at the office of the Mamlatdar or Mahalkari in whose Taluka or Mahal the unit to which the scheme belongs lies, at any time during office hours and certified copies thereof shall be supplied on payment of the fees prescribed in Chapter XXII of the Land Revenue Rules (1921), for inspection, search and grant of copies of such records.

FORM I.

[*See* Rule 3(1).]

WHEREAS a panel of representatives is required to be elected for unit No. comprising the Khar lands of village(s) of taluka district , notice is hereby given to the landlords and tenants of the lands in the said Unit to be present at* on the day of 19 at o'clock, to elect the required representative(s).

Date

Signature of the Mamlatdar
or the authorised Officer.

*Here specify place.

FORM II.

[*See* Rule 9(2).]

To

Mr. resident of
taluka district.

Notice is hereby given that as a scheme described in the margin has been sanctioned by Government and published in the *Bombay Government Gazette* under section 15(3) of the Bombay Khar Lands Act, 1948, you as the landlord/tenant of the land bearing Survey No. measuring A. G. included in the said scheme are hereby informed that the execution of the scheme will commence from You are therefore requested to pay Rs. as your share of the contribution under section 25(2) of the said Act.

Here describe the Scheme.

You are further informed that if you fail to pay the contribution within one month from the date of service of this notice, the same will be recovered from you as arrears of land revenue.

Dated

Signature of the Authorised Officer.

FORM III.

(*See* Rule 13.)

Form of licence for permission to $\frac{\textit{exercise the right of fishery}}{\textit{fish}}$ *in the water of* $\frac{\textit{tidal}}{\textit{khar}}$ *land.*

WHEREAS Mr. resident of Taluka District has applied for permission to $\frac{\text{exercise the right of fishery}}{\text{fish}}$ in the water on $\frac{\text{tidal}}{\text{khar}}$ land measuring approximately a. g. and situated at taluka district as described in the margin and shown in the attached plan;

Describe the $\frac{\text{water}}{\text{land}}$ giving its boundaries properly.

AND WHEREAS the provisions of the Bombay Khar Lands Act, 1948, apply to the said land, license is hereby given to the applicant to $\frac{\text{exercise the right of fishing}}{\text{fish}}$ in the water on the said land for the revenue year on payment of a license fee of Rs. and subject to the following conditions :—

(Here state all or any of the conditions given in rule 12 as well as special conditions, if any.)

Dated

Signature of Licensing Authority.

FORM IV-A.

[*See* Rule 16(5).]

Whereas of Taluka District (hereinafter called "the Borrower") has applied for a loan under section 26 of the Bombay Khar Lands Act, 1948 (Bom. LXXII of 1948) (hereinafter referred to as "the said Act") on* the security of the land situate at and measuring

And Whereas the Borrower has agreed to repay the loan with interest in accordance with the rule 15 of the Bombay Khar Lands Rules, 1949, made under the said Act this order witnesseth that a loan of Rs. (†Rupees) is hereby granted to the Borrower at simple interest of 3¼ per cent. per annum to enable him to pay his share of the contribution towards the cost of the following Scheme prepared under the said Act, namely :—

(Here describe the Scheme)

---

* Strike off, if not applicable. † In words.

2. The loan with the interest thereon and the cost, if any, incurred in making or recovering the loan, shall be repayable in fixed instalments of the amounts and on the dates mentioned in the margin. The amounts so paid, shall be credited to interest and principal in such proportion as shall from time to time be fixed by the Collector subject to the control of the State Government until the whole of the dues outstanding shall have been repaid.

Details of Instalments.			Remarks.
S. No.	Date.	Amount.	

3. The loan is granted subject to the provisions of the said Act, and the Rules for the time being in force thereunder, and to the following conditions, namely :—

(*i*) The loan shall be applied solely for the purpose for which it is granted.

(*ii*) Neither the Borrower, nor his heirs, executors, administrators or assigns shall transfer by way of mortgage, sale, gift, partition or otherwise any land mortgaged as security for the loan.

(*iii*) The statement $\frac{\text{of the encumbrances}}{\text{that there are no encumbrances}}$ now existing on the land mortgaged by the Borrower as security for the loan (which statement is appended to the mortgage-deed endorsed hereon), is true and complete.

(*iv*) Any instalment of the loan shall be payable on such earlier date than the date hereinbefore fixed in that behalf, as may be fixed in any year by the Collector having regard to any exceptional agricultural conditions of the year, as to which conditions the Collector's decision shall be final.

(*v*) Any instalment of the loan may be increased to such amount, not exceeding double the amount hereinbefore fixed, as may be determined in any year by the Collector, having regard to any exceptional agricultural conditions during the year, as to which conditions the Collector's decision shall be final.

(*vi*) The amount of the loan shall be paid to the Borrower on production of a certified copy of this Order at the Treasury at in the following instalments :—

Date	Amount

4. In default of the due observance by the Borrower of any of the foregoing conditions, or if any instalment specified herein or increased by the Collector under condition 3 (*v*) above is not paid within one month of the date fixed for its payment or of the date fixed by the Collector under condition 3 (*iv*) above, the whole of the amount for the time being outstanding against the Borrower shall become immediately recoverable and may be so recovered by the Collector, not withstanding that the period fixed for repayment has not elapsed.

Dated this day of

Signature of the Grantor/Mamlatdar of

5. I agree with the Governor of Bombay that I shall be bound by all the conditions stated in the above written order.

Thumb print
of Borrower.

Signature of the Borrower.

.....

.....

Signature of witnesses.

‡6. I, ...of..... Taluka.....District..... .....am a surety for the said.....and do hereby agree with the Governor of Bombay that, if the said... .....shall make default in payment of the loan or any portion thereof at any time when the same shall become payable, then the amount of the default shall be recoverable from me.

Dated this day of

Thumb print.

.....

Signature of surety.

.....

.....

Signature of witnesses.

§7. I the abovementioned.....hereby agree to repay to the Governor of Bombay the loan now advanced, and in consideration of the same and as security for the due repayment thereof, I hereby mortgage to the Governor of Bombay the lands specified in the margin to which I am absolutely entitled, free from encumbrances (or which are encumbered as stated below).

Village.	S. N.	Area.	Remarks.

8. And, in the event of my making default in payment of any portion of the said monies on any of the dates fixed in or under the above-written order for payment I agree that the Governor of Bombay shall be at liberty to cause the said lands to be sold and the proceeds to be applied in payment of the whole amount outstanding at the time of sale.

9. And I further agree that it shall be lawful for the Governor of Bombay to cause the said lands to be sold without the intervention of the Court under section 69 of the Transfer of Property Act, 1882, in case the said monies or any part thereof have become due and notice in writing requiring payment thereof has been served upon me and I have made default in payment for three months after such service.

Dated this day of

.....

Signature of Borrower.

.....

.....

Signatures of two witnesses.

‡ (This should be scored out when the Borrower mortgages land as security).
§ (This should be scored out if the borrower has no land to give security).

FORM IV-B.

[*See* Rule 16(5).]

Whereas the persons mentioned in column 2 of Schedule A hereto as Borrowers (hefeinafter called "the Borrowers") being residents of
Taluka District have applied for a loan under section 26 of the Bombay Khar Lands Act, 1948 (Bom. LXXII of 1948) (hereinafter referred to as the "said Act").

And Whereas the Borrowers have jointly and severally agreed to repay the loan with interest in accordance with rule 15 of the Bombay Khar Lands Rules, 1949, made under the said Act.

This order witnesseth that a loan of the aggregate amount of Rs.
(Rupees) is hereby granted to the Borrowers at simple interest of 3¼ per cent. per annum for the purposes respectively specified in column 5 of Schedule A.

2. The loan with the interest thereon and the cost, if any, incurred in making or recovering the loan, shall be payable in fixed instalments of the amounts mentioned in column 4 of Schedule A. The amounts so paid shall be credited to interest and principal in such proportion as shall from time to time be fixed by the Revenue Authorities subject to the control of the State Government until the whole of the dues outstanding shall have been repaid.

3. This loan shall be paid to the Borrowers on production of a certified copy of this order at the Treasury at in the amounts specified in respect of each Borrower and on the dates and in the instalments mentioned in column 7 of Schedule A.

4. This loan is granted subject to the provisions of the said Act and the Rules for the time being in force thereunder and to the following conditions namely :—

(*i*) As to the repayment of the aggregate principal amount of the loan now granted, each of the Borrowers is as among the Borrowers themselves liable for and bound to contribute the amount specified in clumn 4 of Schedule A.

(*ii*) As to the payment of the aggregate instalments hereinbefore mentioned, which are inclusive of principal, interest and cost of the loan now granted, each of the Borrowers is as among the Borrowers themselves liable for and bound to contribute subject to condition (*vi*) the amount specified in column 4 of Schedule A in respect of each Borrower and such amounts shall subject to condition 6 be payable on the dates hereinbefore mentioned for the payment of each aggregate instalment.

(*iii*) All the Borrowers are nevertheless jointly and severally liable for and bound to repay to the Governor of Bombay the total amount of the loan now granted with interest and costs, and the total amount so payable shall subject to conditions (*v*) and (*vi*) be payable in the aggregate in the instalments and on the dates hereinbefore sanctioned.

(*iv*) The loan shall be applied solely for the purpose for which it is granted.

(*v*) Any instalment of the loan shall be payable on such earlier date than the date hereinbefore fixed in that behalf as may be fixed in any year by the Collector having regard to any exceptional agricultural conditions of the year as to which conditions the Collector's decision shall be final.

(*vi*) Any instalment of the loan may be increased to such amount, not exceeding double the amount hereinbefore fixed, as may be determined in any year by the Collector having regard to any exceptional agricultural conditions of the year as to which conditions the Collector's decision shall be final.

5. In default of the due observance by any of the Borrowers of any of the foregoing conditions, or if any instalment specified in Schedule A or increased by the Collector under condition 3 (*vi*) above is not fully paid within one month of the date fixed for its payment or of the date fixed by the Collector under condition 3 (*v*) above, the whole of the amounts outstanding against the Borrowers may be recovered immediately from the Borrowers jointly and severally, notwithstanding that the period fixed for repayment has not elapsed.

6. We, the persons who have signed our names in column 7 of Schedule A, hereby agree with the Governor of Bombay to be bound by all the terms and conditions of the above written order and by the particulars specified in Schedule A and accept the same as correct and our signatures hereunder made witness this our agreement and acceptance.

7. And we further agree with the Governor of Bombay that when any disbursement has been made to any of us, the signature of the receipient if made or recorded in Schedule B hereunder written shall be evidence of his having duly received such disbursement to the amount therein.

Schedule A.

Serial No.	Name and Account No. of Borrowers.	Amount for loan (for repayment of which the Borrowers are respectively liable as between themselves).	Consolidated instalments (including principal interest plus costs of the loan for which the Borrowers are respectively liable as between themselves).		Purpose for which the loan is granted.
			No.	Amount of each instalment.	
1	2	3	4		5

Details of land in occupation of Borrowers.			Instalments in which the loan is to be disbursed.			Signature(s) of Borrower(s).	Remarks.
S. No.	Area.	Asstt.	1st	2nd	3rd.		
			Amount Date	Amount Date	Amount Date		
6			7			8	9

Schedule B.

Serial No.	Name of person to whom the disbursement is made.	Date of first disbursement.	Amount.	Signature of person receiving disbursement.	Signature of disbursing Officer.	Date of second disbursement.	Amount.
1	2	3	4	5	6	7	8

Signature of person receiving disbursement.	Signature of disbursing. Officer.	Date of third disbursement.	Amount.	Signature of person receiving disbursement.	Signature of disbursing Officer.
9	10	11	12	13	14

Dated this day of

Signature of Granter or Mamlatdar.

FORM V.

(*See* Rule 18.)

Daily Account of the General Fund (including other funds, such as sinking fund, etc.).

Date.

RECEIPTS.		EXPENDITURE.	
Chalan No.	On what account.	Voucher No.	On what account.
	Amount.		Amount.
OPENING BALANCE.			
Total.		Total.	
		Closing balance.	
		Grand Total.	
		Signature.	

FORM VI

(*See* Rule 18.)

Account of the sinking fund.

Date.

RECEIPTS.		EXPENDITURE.	
Chalan No.	On what account.	Voucher No.	On what account.
	Amount.		Amount.
OPENING BALANCE.			
Total.		Total.	
		Closing balance.	
		Grand Total.	
		Signature.	

FORM VII.

(*See* Rule 18.)

Account of Scheme No. . . . . Unit.

Date.

RECEIPTS.		EXPENDITURE.	
Chalan No.	On what account.	Voucher No.	On what account.
	Amount.		Amount.
OPENING BALANCE.			
Total.		Total.	
		Closing balance.	
		Grand Total.	

Signature.

FORM VIII.

(*See* Rule 20.)

To

Shri

Owner / occupier / other person such as mortgagee, permanent tenant etc.

of S. No. of Taluka District

Notice is hereby given that I, being duly authorised by the Khar Lands Development Board, Bombay State, Bombay / the Committee appointed by the Khar Lands Development Board, Bombay State to enter upon, survey and mark out land for the purpose of preparing, sanctioning or executing a scheme under section 41 of the Bombay Khar Lands Act, 1948, intend to enter upon the land in the above mentioned S. No. for the said purpose at on

Dated the day of 19

Signature of the Officer.

THE BOMBAY SHOPS AND ESTABLISHMENTS ACT, 1948 (BOM. LXXIX OF 1948).

G. N., Lab. D., No. 184/48, dated 4th February 1949 (B. G., Pt. IV, p. 267). S. 4

In exercise of the powers conferred by the proviso to section 4 of the Bombay Shops and Establishments Act, 1948 (Bom. LXXIX of 1948), the Government of Bombay is pleased to add the following entry to the entries under the head "I Establishments" in the Schedule II to the said Act, namely :—

"6-A. Offices of the Reserve Bank of India.....Do."

G. N., Lab. D., No. 184/48, dated 26th February 1949 (B. G., Pt. IV-B, p. 411). S. 4

In exercise of the powers conferred by the proviso to section 4 of the Bombay Shops and Establishments Act, 1948 (Bom. LXXIX of 1948), the Government of Bombay is pleased to add the following entry to the entries under the head "I Establishments" in the Schedule II to the said Act, namely :—

"6-B. Office of the Commercial Secretary for Canada.....Do."

G. N., Lab. D., No. 8/48, dated 24th March 1949 (B. G., Pt. IV-B, p. 786). S. 4

In exercise of the powers conferred by the proviso to section 4 of the Bombay Shops and Establishments Act, 1948 (Bom. LXXIX of 1948), the Government of Bombay is pleased to add the following entry to the entries under the head "I Establishments" in the Schedule II to the said Act, namely :—

"6-C. Shops dealing in milk.....Section 18."

G. N., Lab. D., No. 184/48, dated 11th April 1949 (B. G., Pt. IV-B, p. 935). S. 4

In exercise of the powers conferred by the proviso to section 4 of the Bombay Shops and Establishments Act, 1948 (Bom. LXXIX of 1948), the Government of Bombay is pleased to alter the entry No. 6-B under the head "I-Establishments" in Schedule II to the said Act, as follows, namely :—

In the said entry for the words "Office of the Commercial Secretary for Canada" the following words shall be substituted namely :—

"Offices of Trade Commissioners and of consular officers and other diplomatic representatives of Foreign Governments".

G. N., Lab. D., No. 8/48—I, dated 14th April 1949 (B. G., Pt. IV-B, p. 926). S. 4

In exercise of the powers conferred by the proviso to section 4 of the Bombay Shops and Establishments Act, 1948 (Bom. LXXIX of 1948), the Government of Bombay is pleased to amend the entries in the Schedule II to the said Act, as follows, namely :—

(1) In the head "II. Employees and other persons" in the said Schedule, for the word "Employees" the words "Establishments, employees" shall be substituted.

(2) In entry No. 10 in the said Schedule, (*i*) in the second column for the words " Employees employed " the word " Establishments " shall be substituted.

(3) In entry No. 11 in the said Schedule in the third column, for the letters " Do " the following words and figures shall be substituted, namely :—

" Sections 10, 11, 13 to 18 (Both inclusive) ".

(4) In entry No. 16 in the said Schedule in the third column, after the letters " Do " the following words and figures shall be added, namely :—

" In respect of commercial establishments, also section 18 ".

S. 4 **G. N., Lab. D., No. 8/48-II, dated 14th April 1949 (B. G., Pt. IV-B, p. 927).**

In exercise of the powers conferred by the proviso to section 4 of the Bombay Shops and Establishments Act, 1948 (Bom. LXXIX of 1948), the Government of Bombay is pleased to add the following entry to the entries under the head " I, Establishments " in the Schedule II to the said Act, namely :—

" 6D.	Establishments maintained in connection with the Petrol Service Stations and Petrol Pumps.	All provisions.

S. 4 **G. N., Lab. D., No. 8/48-III, dated 14th April 1949 (B. G., Pt. IV-B, p. 928).**

In exercise of the powers conferred by the proviso to section 4 of the Bombay Shops and Establishments Act, 1948 (Bom. LXXIX of 1948), the Government of Bombay is pleased to add the following entries to the entries under the head " II. Establishments, employees and other persons " in the Schedule II to the said Act, namely :—

" 17	Employers of commercial establishments.	Section 18(1) so far as concerns their own attendance and the attendance of the staff exempted from section 18.
18	Legal and Income Tax Practitioners.	Sections 13 and 18(1) so far as concerns their own attendance and the attendance of the staff exempted from section 18.
19	Establishments dealing wholly in fruits, flowers, vegetables, eggs and fish.	Section 18.
20	Female attendants for women's cloak-rooms or lavatories at theatres or other places of public amusement or entertainment or at residential hotels or restaurants.	Section 33.
21	Female House Keepers employed in residential hotels and female artists in cabaret or entertainment shows.	Section 33. "

G. N., Lab. D., No. 8/48-I, dated 28th April 1949 (B. G., Pt. IV-B, p. 986). **S. 4**

In exercise of the powers conferred by the proviso to section 4 of the Bombay Shops and Establishments Act, 1948 (Bom. LXXIX of 1948) and in modification of the notifications noted in the margin,* the Government of Bombay is hereby pleased to make the following amendments in the Second Schedule, namely :—

*1. Government Notification (LabourDepar tment) No. 8/48 dated the 24th March 1949.

2. Government Notification (Labour Department) No. 8/48-I dated the 14th April 1949.

3. Government Notification (Labour Department) No. 8/48-III dated the 14th April 1949.

1. After the heading 'Exemptions', the words and brackets "(subject to the note mentioned below)" shall be added.

2. For entry No. 6C, the following shall be substituted, namely :—

"6C	Offices of air service companies.	All provisions."

3. After entry No. 6D, the following shall be added, namely :—

"6E	Offices of Agricultural Produce Market Committees established under the Bombay Agricultural Produce Markets Act, 1939 (Bom. XXII of 1939).	All provisions.
6F	Establishments pertaining to any kind of educational activities.	All provisions."

4. In entry No. 7, in the second column for the words, beginning with the word 'Employees' and ending with the word 'formalities', the following shall be substituted namely :—

"Employees in an establishment exclusively attending to the receipt, delivery, clearance or despatch of goods, or to assisting the travel arrangements of passengers by rail or other means of transport".

5. In entry No. 10, in the third column after the word 'Do', the word and figure "and 33" shall be added.

6. In entry No. 12, in the second column, the following explanation shall be added at the end, namely :—

"*Explanation.*—The following employees shall be deemed to be employees whose work is inherently intermittent :—

(1) Employees employed in the sections of establishments carrying out repairs for the maintenance of water supply, gas supply, electricity and drainage, or repairs to ships ;

(2) Employees employed in bill collection work ;

(3) Employees employed in the Road Service Department of the Western India Automobile Association ;"

7. In entry No. 15, in the third clolumn, after the words and brackets "(both inclusive)", the word and figure "and 33" shall be added.

8. In entry No. 16, in the third column, for the word and figure 'section 18', the words and figures "Sections 13 and 18" shall be substituted.

9. In entry No. 17, in the third column, for the word, figures and brackets "section 18(1)" the words, figures and brackets "sections 13 and 18(1)" shall be substituted.

10. In entry No. 19, in the second column, after the word "vegetables" the words "betel leaves, meat" shall be substituted.

11. After entry No. 21, the following entries and note shall be added, namely :—

"22	Establishments of legal and income-tax practitioners.	Section 15.
23	Sections of newspaper or news agency offices pertaining to news collection, editing and publishing.	Sections 13 to 18 (both inclusive).
24	Ice manufacturing establishments.	Sections 13 and 18.
25	Bakeries	Provision relating to opening hour and section 18.
26	Such hair cutting establishments and hammam-khanas as open not earlier than 6 a.m. and close not later than 9-30 p.m.	Sections 10, 11 and 16.
27	Shops dealing in milk, curds, cream and butter.	Sections 11, 16, 18 and 33.
28	Photography establishments ...	Provision of opening hour in section 10.
29	Railway book stalls	Sections 10, 11 and 18.
30	Those establishments in organised markets (like the cotton or stocks and securities markets) recognised by the prescribed authority as involving intermittent work, which observe not more than six and a half total hours of work per day between the limits of 11-30 a.m. and 6-30 p.m.	Section 15.
31	Sections in banks pertaining to safe deposit vaults or lockers or godowns.	Section 18.
32	Establishments employing not a single employee.	Section 62.
33	Employers of all establishments.	Provision relating to closing hour in sections 11, 13 and 19 so far as their own work is concerned, provided no sale or service to customers is rendered.
34	Piece workers in establishments ...	Sections 14, 16, 17 and 33.

Note.—The exemptions from the provisions of section 18 in entries Nos. 7 to 12, 14, 16, 19, 23, 24, 25, 27, 29 and 31 shall be permissible in the case of such establishments referred to therein as give the employees concerned one day in a week as a holiday and make no deduction from wages on account thereof."

G. N., Lab. D., No. 8/48, dated 14th May 1949 (B. G., Pt. IV-B, p. 1088). S. 4

In exercise of the powers conferred by the proviso to section 4 of the Bombay Shops and Establishments Act, 1948 (Bom. LXXIX of 1948), and in modification of Government Notification, Labour Department, No. 8/48-I, dated the 28th April 1949, the Government of Bombay is hereby pleased to make the following amendments in the Second Schedule, namely :—

1. After entry No. 34, the following entries shall be added, namely :—

"35	Shops supplying cycles on hire or petromax and other lanterns on hire.	Provision relating to closing hours in section 11.
36	Shops dealing in newspapers ...	Section 18."

2. In the note below the said Schedule, for the word and figure "and 31", the word and figures "31 and 36" shall be substituted.

G. N., Lab. D., No. 8/48, dated 17th May 1949 (B. G., Pt. IV-B, p. 1105). S. 4

In exercise of the powers conferred by the proviso to section 4 of the Bombay Shops and Establishments Act, 1948 (Bom. LXXIX of 1948), and in modification of the notifications noted in the margin* the Government of Bombay is hereby pleased to make the following amendments in the Second Schedule, namely :—

*1. Government Notification, Labour Department, No. 8/48-III, dated the 14th April 1949.

2. Government Notification, Labour Department, No. 8/48-I, dated the 28th April 1949.

1. After entry No. 6F, the following entry shall be added, namely :—

"6G. The High Court Law Library, High Court, Bombay. All provisions."

2. In entry No. 19, in the second column, after the word "meat" the word "bread" shall be added.

G. N., Lab. D., No. 8/48, dated 19th May 1949 (B. G., Pt. IV-B, p. 1106). S. 4

In exercise of the powers conferred by the proviso to section 4 of the Bombay Shops and Establishments Act, 1948 (Bom. LXXIX of 1948) and in modification of the notifications noted in the margin, the Government of Bombay is hereby pleased to make the following amendments in the Second Schedule, namely :—

1. Government Notification (Labour Department) No. 8/48-1, dated the 28th April 1949.

2. Government Notification (Labour Department) No. 6/48-1, dated the 14th May 1949.

1. In entry No. 12 in the second column, the following shall be added to the explanation at the end, namely :—

"(4) Employees employed in the sections of establishments for the purpose of maintenance and repairs of buildings or of projectors or sound equipments in cinemas."

2. After entry No. 36, the following entry shall be added, namely :—

" 37	Code Departments of Commercial establishments.	Sections 13 and 18."

3. In the note below the said Schedule, for the word and figure " and 36 " the word and figures " 36 and 37 " shall be substituted.

S. 4 **G. N., Lab. D., No. 8/48, dated 24th May 1949 (B. G., Pt. IV-B, p. 1218).**

In exercise of the powers conferred by the proviso to section 4 of the Bombay Shops and Establishments Act, 1948 (Bom. LXXIX of 1948) and in modification of Government Notification, Labour Department No. 8/48, dated the 19th May 1949, the Government of Bombay is pleased to make the following amendments in the Second Schedule, namely :—

After entry No. 37, the following entries shall be added, namely :—

" 38	Operators employed in cinema theatres on days on which extra charity shows recognised by the prescribed authority are held.	Sections 28 and 30.
39	Children and young persons exclusively employed in the sport sections of residential clubs.	Sections 32 to 34 (both inclusive)"

S. 4 **G. N., Lab. D., No. 8/48, dated 3rd June 1949 (B. G., Pt. IV-B, p. 1274).**

In exercise of the powers conferred by the proviso to section 4 of the Bombay Shops and Establishments Act, 1948 (Bom. LXXIX of 1948) and in modification of the notifications noted in the margin the Government of Bombay is pleased to make the following amendments in the Second Schedule, namely :—

1. Government Notification (Labour Department) No. 6/48 dated the 19th May 1949.

2. Government Notification, Labour Department No. 8/481 dated the 24th May 1949.

1. In entry No. 13, in the third column, for the word and figure " section 19 ", the words and figures " sections 19, 20 and 23 " shall be substituted.

2. In entry No. 14, in the second column, after the word " caretakers ", the words " fire-fighting staff " shall be added.

3. After entry No. 39, the following entries shall be added, namely :—

" 40	Establishments of Telegram Commission Agents.	Sections 13 and 18.
41	Young persons employed as performers in dramatic shows.	Section 33. "

4. In the note below the said Schedule, for the word and figure " and 37 ", the word and figures " 37 and 40 " shall be substituted.

G. N., Lab. D., No. 8/48, dated 11th July 1949. S. 4

In exercise of the powers conferred by the proviso to section 4 of the Bombay Shops and Establishments Act, 1948 (Bom. LXXIX of 1948) and in modification of the notifications noted in the margin, the Government of Bombay is pleased to make the following amendments in the Second Schedule, namely :—

1. Government Notification, (Labour Department) No. 8/48-I dated the 28th April 1949.
2. Government Notification, (Labour Department) No. 8/48, dated the 17th May 1949.
3. Government Notification, (Labour Department) No. 8/48, dated the 19th May 1949.

(1) After the entry No. 6G, the following entry shall be added namely :—

" 6H.	Office of the Bombay Housing Board established under the Bombay Housing Board Act, 1948 (Bom. LXXIX of 1948) and offices subordinate to it.	All provisions. "

(2) In entry No. 8 in the third column, after the word " Do " the words and figures " and 21 and 24 " shall be added.

(3) In entry No. 9, in the third column, for the word " Do " the following words and figures shall be substituted, namely :—

" Sections 10, 11, 13 to 18 (both inclusive) ".

(4) In entry No. 12, in the second column, the following words shall be added to the explanation (4) at the end, namely :—

" or of air-conditioning and refrigeration plants."

(5) In entry No. 28, in the third column, after the words and figures " Provision of opening hour in section 10 " the words and figures " and provision of closing hour in section 11" shall be added.

G. N., Lab. D., No. 8/48, dated 24th August 1949 (B. G., Pt. IV-B, p. 1832). S. 4

In exercise of the powers conferred by the proviso to section 4 of the Bombay Shops and Establishments Act, 1948 (Bom. LXXIX of 1948), the Government of Bombay is pleased to make the following amendment in the Second Schedule, namely :—

In entires No. 1 to 5, in the second column, for the word " Offices ", the word " Establishments " shall be substituted.

G. N., Lab. D., No. 8/48, dated 29th September 1949 (B. G., Pt. IV-B, p. 1932). S. 4

In exercise of the powers conferred by the proviso to section 4 of the Bombay Shops and Establishments Act, 1948 (Bom. LXXIX of 1948) and in modification of Government Notification, Labour Department No. 8/48, dated the 11th July 1949, the Government of Bombay is pleased to make the following amendment in the Second Schedule, namely :—

After entry No. 6H, the following entry shall be added, namely :—

" 6I.	Office of the Industrial Finance Corporation of India at Bombay.	All provisions."

S. 4

G. N., Lab. D., No. 8/48, dated 7th November 1949.

In exercise of the powers conferred by the proviso to section 4 of the Bombay Shops and Establishments Act, 1948 (Bom. LXXIX of 1948), the Government of Bombay is pleased to make the following amendment in the Second Schedule, namely :—

After entry No. 41, the following entry shall be added, namely :—

" 42	Such shops dealing in pan, bidi, cigarettes, matches and other ancillary articles as open not earlier than 6-00 a.m.	Section 10. "

S. 4

G. N., Lab. & H. D., No. 8/48, dated 20th February 1950 (B. G., Pt. IV-B, p. 306).

In exercise of the powers conferred by the proviso to section 4 of the Bombay Shops and Establishments Act, 1948 (Bom. LXXIX of 1948) and in modification of Government Notification, Labour Department, No. 8/48, dated the 11th July 1949, the Government of Bombay is pleased to make the following amendment in the second schedule, namely :—

In entry No. 12, in the second column the following words shall be added to the explanation (4) at the end, namely :—

" or of punched-card accounting equipment ".

S. 4

G. N., Lab. & H. D., No. 8/48, dated 23rd March 1950 (B. G., Pt. IV-B, p. 649).

In exercise of the powers conferred by the proviso to section 4 of the Bombay Shops and Establishments Act, 1948 (Bom. LXXIX of 1948) and in modification of the notifications noted below* the Government of Bombay is pleased to make the following amendment in the second schedule, namely :—

1. After entry No. 42, the following entry shall be added namely :—

		Section.
" 43	Upcountry depots and transhipment stations belonging to oil companies	18 "

*(1) Government Notification, Labour Department, No. 8/43, dated the 3rd June 1949.

(2) Government Notification, Labour Department, No. 8/48, dated the 7th November 1949.

2. In the note below the said schedule, for the word and figure " and 40 ", the word and figures " 40 and 43 " shall be substituted.

S. 4

G. N., Lab. & H. D., No. 8/48, dated 11th April 1950 (B. G., Pt. IV-B, p. 789).

In exercise of the powers conferred by the proviso to section 4 of the Bombay Shops and Establishments Act, 1948 (Bom. LXXIX of 1948), the Government of Bombay is pleased to make the following amendment in the Second Schedule namely :—

After entry No. 43, the following entry shall be added, namely :—

"44.	Such employees of the Co-operative Banks as are engaged in propaganda, supervision and training in business methods of agriculturists and rural artisans.	Section 13 ".

G. N., Lab, & H. D., No. 8/48, dated 2nd June 1950 (B. G., Pt. IV-B, p. 1151). S. 4

In exercise of the powers conferred by the proviso to section 4 of the Bombay Shops and Establishments Act, 1948 (Bom. LXXIX of 1948), the Government of Bombay is pleased to make the following amendments in the Second Schedule, namely :—

1. After entry No. 44, the following entries shall be added, namely :—

"45.	Menial staff employed in stables attending to the work of feeding, bathing and milking of animals, cleaning of stables and distribution of milk.	Sections 13 to 18 (both inclusive).
46.	Dal Manufacturing establishments ...	Sections 16 and 18 ".

2. In the note below the said schedule, for the word and figure " and 43 ", the word and figures " 43, 45 and 46 " shall be substituted.

G. N., Lab. & H. D., No. 8/48, dated 22nd June 1950. S. 4

In exercise of the powers conferred by the proviso to section 4 of the Bombay Shops and Establishments Act, 1948 (Bom. LXXIX of 1948), and in modification of the notifications noted below*, the Government of Bombay is pleased to make the following amendment in the Second Schedule, namely :—

In entry No. 19, in the second column, after the word " bread ", the word " mawa " shall be added.

*(1) Government Notification, Labour Department, No. 8/48-III, dated the 14th April 1949.
(2) Government Notification, Labour Department, No. 8/48-I, dated the 28th April 1949.
(3) Government Notification, Labour Department, No. 8/48, dated the 17th May 1949.

G. N., Lab. & H. D., No. 8/48, dated 22nd June 1950. S. 4

In exercise of the powers conferred by the proviso to section 4 of the Bombay Shops and Establishments Act, 1948 (Bom. LXXIX of 1948), and in modification of Government Notification, Labour and Housing Department, No. 8/48, dated the 20th February 1950, the Government of Bombay is pleased to make the following amendment in the second schedule, namely :—

In entry No. 12, in the second column, the following words shall be added to the explanation (4) at the end, namely :—

" or of lifts ".

S. 10(1)(a) **G. N., Lab. D., No. 8/48-IV, dated 14th April 1949 (B. G., Pt. IV-B, p. 928).**

In pursuance of clause (*a*) of sub-section (*1*) of section 10 of the Bombay Shops and Establishments Act, 1948 (Bom. LXXIX of 1948), the Government of Bombay is pleased to notify newspapers for the purposes of the said clause.

S. 10(1)(a) **G. N., Lab. D., No. 8/48-II, dated 28th April 1949 (B. G., Pt. IV-B, p. 988).**

In pursuance of clause (*a*) of sub-section (*1*) of section 10 of the Bombay Shops and Establishments Act, 1948 (Bom. LXXIX of 1948), the Government of Bombay is pleased to notify curds, butter and flowers for the purposes of the said clause.

S. 17 **G. N., Lab. D., No. 8/48, dated 18th August 1949.**

In exercise of the powers conferred by the proviso to section 17 of the Bombay Shops and Establishments Act, 1948 (Bom. LXXIX of 1948), the Government of Bombay is pleased to increase the spread over period in respect of employees employed in commercial establishments to sixteen hours a day on the days when the employees are required or allowed to work in the commercial establishments in excess of the limit of hours of work in accordance with the provisions of rule 8 of the Bombay Shops and Establishments Rules, 1949.

S. 30 **G. N., Lab. D., No. S. 58-I, dated 2nd September 1949.**

In exercise of the powers conferred by the proviso to section 30 of the Bombay Shops and Establishments Act, 1948 (Bom. LXXIX of 1948), the Government of Bombay is pleased to increase the spread-over period in respect of employees employed in cinema theatres to fourteen hours a day on all sundays and fifty-two other days in a year subject to the condition that such days shall be notified by the theatre concerned to the Inspector in advance.

S. 30 **G. N., Lab. D., No. S. 58-II, dated 2nd September 1949.**

In exercise of the powers conferred by the proviso to section 30 of the Bombay Shops and Establishments Act, 1948 (Bom. LXXIX of 1948), the Government of Bombay is pleased to increase the spread-over period in respect of operators employed in cinema theatres to fourteen hours a day on the days when Press shows or Censor shows are held in such theatres, subject to the condition that such days shall be notified by the theatre concerned to the Inspector in advance.

G. N., Lab. D., No. 539/48, dated 8th February 1949 (B. G., Pt. IV-B, p. 234A).

S. 67 Bombay Shops and Establishments Rules, 1949.

Amended by G. N., Lab. D., No. 539/48-II, dated 15th November 1949.
Amended by G. N., Lab. and H. D., No. 539/48, dated 3rd April 1950.

In exercise of the powers conferred by section 67 of the Bombay Shops and Establishments Act, 1948 (Bom. LXXIX of 1948), the Government of Bombay is pleased to make the following rules to carry out the purposes of the Act, namely :—

1. *Short title.*—These rules may be called the Bombay Shops and Establishments Rules, 1949.

2. *Definitions.*—In these rules, unless there is anything repugnant in the subject or context—

(*a*) "Act" means the Bombay Shops and Establishments Act, 1948;

(*b*) "Form" means a form appended to these rules;

(*c*) "Government" means the Government of Bombay;

(*d*) "Regional Language" means any of the following languages, namely :—

In the City of Bombay, Marathi, Gujarati or Hindustani (Devnagri or Urdu Script) and elsewhere, Marathi, Gujarati, Kannada, or Hindustani (Devnagri or Urdu Scripts);

(*e*) "Schedule" means a schedule appended to these rules;

(*f*) "Section" means a section of the Act;

(*g*) Words and expressions used in the Act and not defined in these rules shall have the meanings assigned to them in the Act.

3. *Appointment of prescribed authority.*—The Municipal Commissioner for the City of Bombay shall be the prescribed authority for the City of Bombay; the Collector, Bombay Suburban District, shall be the prescribed authority for the local areas in the said district and elsewhere the District Magistrate shall be the prescribed authority for the local areas in his district.

4. *Suspensions of provisions of the Act.*—Government may suspend the operation of the provisions of the Act under section 6 at the time of the following holidays and occasions :—

Christmas holidays.

Divali holidays.

Pateti holidays.

Jamshedi Navroz.

Ramzan and Ramzan Id.

Ganesh Chaturthi.

Any occasion on which a public emergency is declared in this behalf by Government.

Public fairs or exhibitions or religious festivals recognised in this behalf by Government.

Any other occasion deemed fit by Government in this behalf.

5. *Form of submitting a statement, the fees and other particulars under sub-section (1) of section 7.*—Within the period specified in sub-section (*4*) of section 7, the employer of every establishment shall send to the Inspector of the local area concerned a statement in Form A together with such fees as are prescribed in Schedule 1.

6. *Manner of registering establishments and the form of registration certificate.*—On receipt of the statement and the fees prescribed in rule 5, the Inspector shall, on being satisfied about the correctness of the statement, register the establishment in the appropriate part of the register of establishments in Form B and shall issue a registration certificate in Form C to the employer.

7. *Form for notifying a change and fees.*—The employers shall notify to the Inspector of the local area concerned, in Form D, any change in respect of any information contained in his statement prescribed under rule 5 within seven days, after the change has taken place. The notice in Form D shall be sent to the Inspector with such fees as are prescribed in Schedule II.

8. *Fixing six days in a year for additional overtime.*—(1) An employee may be required or allowed to work in a shop or commercial establishment under sub-section (*3*) of section 14 in excess of the period fixed under sub-section (*1*) of the said section on any of the following days for purposes of making of accounts, stock taking or settlements if such excess period does not exceed twenty-four hours :—

The 31st day of March ;

The 30th day of June ;

The three days preceding the Divali New Year day ;

The 31st day of December :

Provided that in lieu of any day or days mentioned above the employer may substitute any other day or days, as the case may be, which shall be intimated to the Inspector at the beginning of the year.

(2) On any of the days mentioned in sub-rule (1), the operation of the provisions relating to closing hours in sections 11 and 13 shall be deemed to be suspended.

9. *Notice to be given to Inspector when additional overtime is to be worked.*—Notice of the intention to require employees in a shop or commercial establishment to work under sub-section (*3*) of section 14 in excess of the period fixed under sub-section (*1*) of the said section on any day prescribed under rule 8 shall be given either in English or in a regional language to the Inspector within whose jurisdiction such establishment is situated at least 24 hours before such day :

Provided that if the employer for reasons beyond his control is unable to give the requisite notice at least 24 hours before such day, he shall give the notice on such day.

10. *Form of register for entering refusal of leave.*—The register for entering refusal of leave to be kept under sub-section (*3*) of section 35 shall be in Form E and shall be kept in five Parts as follows :—

Part I—Shops.

Part II—Commercial Establishments.

Part III—Residential Hotels.

Part IV—Restaurants and Eating Houses.

Part V—Theatres and other places of Public Amusement or Entertainment.

11. *Fixing times and methods for cleaning the establishments.*—In every establishment all the inside walls of the rooms and all the ceilings and tops of such rooms (whether such walls, ceilings and tops be plastered or not) and all the passages and staircases shall be lime-washed or colour-washed at least once in two years dating from the period when last lime-washed or colour-washed. Where the walls, etc., are rendered, in the opinion of the local authority, particularly unclean, the local authority may require them to be lime-washed or colour-washed earlier than the period specified above. All the beams, rafters, doors, window frames and other wood work with the exception of floors shall be either painted or varnished once in seven years dating from the period when last painted or varnished and shall be kept in a cleanly state. The dates on which lime-washing, colour-washing, painting or varnishing is carried out shall be duly entered in a register maintained in Form F, which shall be shown to the Inspector when required :

Provided that the provisions of this rule shall not apply to—

(*i*) rooms used only for the storage of articles ;

(*ii*) walls or tops of rooms which are made of galvanised iron, tiles, asbestos sheets or similar material or glazed bricks ;

(*iii*) Any other establishment or parts thereof in which lime-washing or painting is in the opinion of the local authority or Government, as the case may be, unnecessary to satisfy the requirements of section 39 as to cleanliness.

12. *Rubbish not to be allowed to accumulate.*—No rubbish, filth or debris shall be allowed to accumulate or to remain on any premises in an establishment in such position that effluvia therefrom can arise within the establishment.

13. *Precautions against fire.*—No person shall smoke or use a naked light or cause or permit any such light to be used, in the immediate vicinity of any inflammable material in any establishment.

14. *Supervision to be exercised by Government over local authority.*—Government may exercise its supervisory functions through the agency of the Factory Inspectors and give such directions to the Local Authority as may appear to it necessary for the proper enforcement of the Act.

15. *Qualifications of Inspectors.*—(1) No person shall be appointed to be an Inspector under the Act unless he is a graduate of a recognised University and is able to speak, read and write the regional language of the area for which he is to be appointed as an Inspector :

Provided that in special circumstances a person who is not a graduate may be appointed to be an Inspector under the Act with the previous sanction of Government.

(2) No person shall be appointed to be an Inspector under the Act, or having been so appointed, shall continue to hold office, if he has or acquires, directly or indirectly by himself or by any partner, any share or interest in any establishment to which the Act applies in the area for which he is to be or has been appointed.

16. *Duties of Inspectors.*—The Inspector shall make such examination as may appear to him to be necessary for the purpose of satisfying himself that the provisions of the Act and of these rules and any orders passed by *Government* or the local authority under the Act are duly observed. In particular, he shall satisfy himself—

(*i*) that the establishments are duly registered under the Act ;
(*ii*) that the registers, records and notices required to be maintained or displayed under the Act or these rules are properly maintained or displayed ;
(*iii*) that the intervals of rest and holidays required to be granted or observed under the Act are granted and observed and that the limits of hours of work and spread-over laid down under the Act are not exceeded ;
(*iv*) that the provisions of the Act and any orders issued by *Government* or the local authority regarding the opening and closing hours are duly observed ;
(*v*) that the identity cards for employees in residential hotels, restaurants and eating houses are properly provided ;
(*vi*) that the provisions of the Act and these rules regarding leave are properly observed ;
(*vii*) that the provisions of the Act and these rules relating to cleanliness, lighting and precautions against fire are properly observed ;
(*viii*) that the provisions of the Act relating to the payment for overtime work are duly observed ; and
(*ix*) that no child is allowed to work in any establishment.

17. *Submission of diary by Inspector.*—The Inspector shall keep a file of the records of his inspections arranged in monthly bundles and shall submit to the officer or local authority to whom he is subordinate on the 15th day of each month, a diary in Form G, showing the work done in the preceding month. A copy of the said diary shall be retained by the Inspector.

18. *Maintenance of registers and records and display of notices.*—(1) Every employer of a Shop or Commercial establishment shall maintain a register of employment in Form H, provided that where the opening and closing hours are ordinarily uniform the employer may maintain such register in Form I. Every employer of a residential hotel, restaurant, eating house, theatre or other place of public amusement or entertainment shall maintain a register of employment in Form HH, provided that where the opening and closing hours are ordinarily uniform the employer may maintain such register in Form II.

(2) Notwithstanding anything contained in sub-rule (1), an employer may, instead of maintaining a register as provided in the said sub-rule, exhibit in his establishment, a notice specifying the daily hours to be worked by, and intervals for rest to be allowed to, employees. The notice shall be in Form J and shall be exhibited not later than the closing hour on the Saturday immediately preceding the first week in which the hours of work shall be as specified in such notice. It shall continue to be exhibited so long as the hours of work specified in it are observed.

(3) Where an employer has exhibited the notice referred to in sub-rule (2), he shall keep a record of hours of work in Form K.

(4) Every employer of a residential hotel, restaurant, eating house, theatre or other place of public amusement or entertainment shall exhibit in his establishment a notice in Form L, specifying the day or days of the week on which his employees shall be given a holiday. The notice shall be exhibited before the employees to whom it relates cease work on the Saturday immediately preceding the first week during which it is to have effect.

(4A) The provisions of sub-rule (4) shall apply *mutatis mutandis* to every employer or manager of an establishment which is entitled to exemptions specified in the Note to Schedule II to the Act, and which gives to employees one day in a week as a holiday, and makes no deduction from wages on account thereof.

(5) Every employer shall maintain a register of leave in Form M.

(6) The employer shall provide each employee with a book called "Leave Book" in Form N. The book shall be the property of the employee and the employer or his manager or other agent shall not demand it except to make entries therein and shall not keep it for more than a week at a time.

(7) If any employee loses his "Leave Book", the employer shall provide him with another copy on the payment of anna one and shall complete it from his record.

(8) Every employer shall exhibit in his establishment a notice containing such extracts of the Act and these rules, in English and in the regional language of the majority of his employees, as the local authority or *Government* may direct.

(9) Any notice required to be exhibited under these rules shall be exhibited in such manner that it can be readily seen and read by any person whom it affects and shall be renewed whenever it becomes defaced or otherwise ceases to be clearly legible.

(10) In any register or record which an employer is required to maintain under these rules, the entries relating to any day shall be made on such day.

(11) The registers, records, and notices relating to any year shall be preserved till the end of the next year.

(12) If on an application made by an employer in writing, the local authority or *Government*, as the case may be, is satisfied that any muster roll, register or record maintained by such employer gives in respect of all or any of the employees

in his establishment the particulars required to be shown in any register, record, or notice prescribed under this rule, the local authority or *Government*, as the case may be, may by order in writing direct that such muster roll, register or record shall to the corresponding extent be maintained in place of such register, record or notice, as the case may be.

(13) Save as provided in sub-rule (8), all registers, records, muster rolls and notices required to be maintained, exhibited or given under this rule shall be either in English or in a regional language.

(14) Every employer shall maintain a visit book, in which an Inspector visiting the establishment may record his remarks regarding any defects that may come to light at the time of his inspection and shall produce it whenever required to do so by any Inspector.

19. An Inspector may require an employer to produce in respect of any person employed by him one of the following documents, namely, (1) an authentic extract from the records of any school; (2) a certified copy from the Birth Register; (3) a certificate of age from a registered medical practitioner in Form O.

FORM A.

(*See* rule 5.)

Statement under section 7 (1).

1 Name of the establishment, if any.

2 Postal address of the establishment.

3 Name of the employer.

4 Name of the manager, if any.

5 Category of the establishment, i.e., whether a shop, commercial establishment, residential hotel, restaurant, eating house, theatre or other place of public amusement or entertainment.

6 Nature of business.

7 Names of members of employer's family, employed in the establishment; state separately the names of young persons, if any.

8 Names of other persons occupying position of management or employees engaged in confidential capacity.

9 Total number of employees; state separately the number of women and/or young persons, if any.

Signature of the employer.

Dated

Note.—This statement shall be sent to the Inspector of the local area concerned with such fees as are prescribed in Schedule I.

FORM B.

(*See* rule 6.)

Register of establishments.

Part I—Shops.
Part II—Commercial Establishments.
Part III—Residential Hotels.
Part IV—Restaurants and Eating Houses.
Part V—Theatres, and other places of Public Amusement or Entertainment.

Serial No.	Registration Certificate No.	Name of the employer.	Name of the manager, if any.	Postal address of the establishment.	Name of the establishment, if any.
1	2	3	4	5	6

Nature of business.	Number of members of employer's family. Adult males, women, young persons.	Number of other persons occupying position of management or employees engaged in confidential capacity.	Total number of employees. Adult males, women, young persons.	Date of inspection.	Remarks.
7	8	9	10	11	12

FORM C.

(*See* rule 6.)

Bombay Shops and Establishments Act, 1948.

Registration certificate of establishment.

Name of the establishment or employer.

Postal address of the establishment.

Registration No.

Office of the Inspector under the Bombay Shops and Establishments Act, 1948.

It is hereby certified that the has been registered as a .....*under the Bombay Shops and Establishments Act, 1948, this day of 19 .

Inspector under the Bombay Shops and Establishments Act, 1948.

Seal.

*Here insert the category of the establishment.

FORM D.

(*See* rule 7.)

Notice of change.

Name of the establishment already registered: or name of the employer.

Registration Certificate No.

(Address)

Dated the day of 19

To

The Inspector under the Bombay Shops and Establishments Act, 1948.

Notice is hereby given that the following change has taken place in respect of information forwarded to you in Form A, which please note.

Signature of the employer.

Note.—The notice of change in this form shall be sent together with such fees as are prescribed in Schedule II.

FORM E.

(*See* rule 10.)

Register for entering refusal of leave.

Serial No.	Name of the employer.	Name of the establishment.	Postal address of the establishment	Name of the employee.
1	2	3	4	5

Amount of and date from which leave due.	Amount of leave applied for and date of application.	Date of refusal.	Remarks.
6	7	8	9

FORM F.

(*See* rule 11.)

Register showing dates of lime washing, etc.

Parts of the establishment, i.e., name of room.	Parts lime-washed, colour-washed, painted or varnished, e.g., walls, ceilings, wood works, etc.	Treatment (whether lime-washed, colour-washed, painted or varnished).
		(*contd. below*)

Date on which lime-washing, colour-washing, painting, or varnishing was carried out (according to the English calendar).			Signature of the employer or manager.	Remarks.
Day.	Month.	Year.		

(Signature of the employer)

(Signature of the manager)

FORM G.

(*See* rule 17.)

Diary of Inspector for the month ending 19

Date	Place.	Establishments inspected.	Establishments inspected for definite purposes.	Remarks of defects found and directions and orders issued.

FORM H.

[*See* rule 18 (1).]

Register of employment in a shop or commercial establishment.

For the week ending 19

| Name of the employee. | Whether woman or not. | Whether young person or not. | Days of week. | | | |

FORM HH.

[*See* rule 18 (1)].

Register of employment in a residential hotel, restaurant, eating house, theatre or other place of public amusement or entertainment.

For the month ending 19 .

Name of the employee.	Whether woman or not.	Whether young person or not.	Days of month. 1		
			Time at which employment commences.	Time at which employment ceases.	Rest intervals.

(*Contd. below*)

Days of month. 2	3	4	5	6 etc.	Days on which overtime work is done and extent of such overtime on each day.	†Extent of overtime worked previously during the year in accordance with the provisions of section 21 (2).
*	*	*	*	*		

Note.—The mark 'H' shall be made in the column relating to any day on which a holiday is given in accordance with the notice referred to in rule 18 (4) and 'A' if the employee is absent on any other day.

* The same sub-columns as for 1.

† This column need not be filled by theatres or other places of public amusement or entertainment.

The entries under the heading 'Rest intervals' shall be the actual hours at which intervals are to begin and end (e.g. 1 p.m. to 2 p.m.)."

FORM I.

[*See* rule 18 (1).]

For the week ending 19 .

Register of Employment in a shop or commercial establishment where opening and closing hours are ordinarily uniform.

Name of the employee.	Whether woman or not.	Whether young person or not.	Time at which employment commences.	Time at which employment ceases.	Rest interval.	Hours		
						Sunday.	Monday.	Tuesday.

(*Contd. below.*)

worked on				Total hours worked during the week.	Days on which overtime work is done and extent of such overtime on each occasion.	Extent of overtime worked during the week.	Extent of overtime worked previously during the year in accordance with the provisions of rule 8.
Wednesday.	Thursday.	Friday.	Saturday.				

Note.—The mark 'H' shall be made in the column relating to any day on which an establishment remains closed in accordance with the notice referred to in section 18 (*1*) or a holiday is given in accordance with the note below Schedule II to the Act, as amended from time to time and 'A' if the employee is absent on any other day.

The entries under the heading 'Rest intervals' shall be the actual hours at which intervals are to begin and end (e.g. 1 p.m. to 2 p.m.)

FORM II.

[*See* rule 18 (1).]

Register of Employment in a residential hotel, restaurant, eating house, theatre or other place of public amusement or entertainment where opening and closing hours are ordinarily uniform.

For the month ending 19 .

Name of the employee.	Whether woman or not.	Whether young person or not.	Time at which employment commences.	Time at which employment ceases.	Rest intervals.	Hours worked on								Days on which overtime work is done and extent of such overtime on each occasion.	* Extent of overtime worked previously during the year in accordance with the provisions of section 21(2).
						1	2	3	4	5	6	7	etc.		

Note.—The mark 'H' shall be made in the column relating to any day on which a holiday is given in accordance with the notice referred to in rule 18 (4) and 'A' if the employee is absent on any other day.

* This column need not be filled by theatres or other places of public amusement or entertainment

The entries under the heading 'Rest intervals' shall be the actual hours at which intervals are to begin and end (e.g. 1 p.m. to 2 p.m.)."

FORM J.

[*See* rule 18 (2).]

Notice of periods of work.

Daily periods of work of employees

Commencing 19

Name of the employer or establishment.

Description of Department (if applicable)

Names of the employees.	Whether woman or not.	Whether young person or not.	Day		
			Employment to commence	Intervals for rest	Employment to cease.

(Signed)

(Employer)

Date.....

Note.—1. This notice must be exhibited not later than the closing hour on the Saturday preceding the first week in which it is to take effect, and must continue to be exhibited while it is in force, in such a manner that it may be readily seen or read by any person whom it affects.

2.- The hours to be specified in this notice shall be the hours to be worked exclusive of overtime.

3. The entries under the heading "Intervals for rest" shall be the actual hours at which intervals are to begin and end (e.g. 1 p. m. to 2 p. m.)

FORM K.

[*See* rule 18 (3).]

Record of hours of work of the employees.

(To be used only when notice in Form J is exhibited).

Description of Department (if applicable)

For the week ending 19 .

Names of the employees.	Whether young person or not.	Day on which holiday granted.	Total hours worked during the week.	* Days on which overtime is done and extent of such overtime on each occasion.	† Extent of overtime worked during the week.	‡ Extent of overtime worked previously during the year in accordance with the provisions of rule 8 and section 21(2).

*This column need not be filled by theatres or other places of public amusement or entertainment.

†This column need not be filled by residential hotels, restaurants, and eating houses, theatres or other places of public amusement or entertainment.

‡This column need not be filled by theatres or other places of public amusement or entertainment.

FORM L.

[*See* rule 18 (4).]

Notice of holiday.

The employees in this* { Residential Hotel / Restaurant / Eating House / Theatre / Other place of public amusement and entertainment

shall be given a holiday on the day named below in the week following the date of this notice and until further notice.†

‡Names of the employees.	Day on which holiday is allowed.

*Strike out the words which are not appropriate.
†Strike out the words "until further notice" if the notice is intended to apply only to one week.
‡If the same day is fixed for all the employees, the word "all" only need be inserted in this column.

Signature of the employer.

Date.....

FORM M.

[*See* rule 18 (5).]

Register of leave.

Name of the employer or establishment.

Description of department (if applicable).

Name of the employee	Date of entry into service.	Amount of and date from which leave due.	Amount of and date from which leave allowed.		If leave applied for and refused, amount of such leave and date of application for and refusal of leave.
			From	To	

(*Contd. below.*)

Amount payable in respect of leave paid on		Balance of leave carried over.	Discharged employee or employees quitting employment after having applied for and having been refused leave.		Remarks
First moiety	Second moiety		Date of discharge etc.	Date and amount of payment made in respect of leave.	

Note.—Separate page shall be allotted to each worker.

FORM N.

[*See* rule 18 (6).]

Leave book.

Same form as the form of the register of leave but a separate book shall be made for each employee on a thick bound sheet.

FORM O.

[*See* rule 19.]

Form of certificate.

I hereby certify that I have personally examined (Name)..... $\frac{\text{son}}{\text{daughter}}$ of..... residing at .....and that $\frac{\text{he}}{\text{she}}$ has completed $\frac{\text{his}}{\text{her}}$ $\frac{\text{twelfth}}{\text{seventeenth}}$ year.

$\frac{\text{His}}{\text{Her}}$ description marks are .....

Thumb impression

Medical Practitioner.

SCHEDULE I.

(*See* rule 5.)

The statement in Form A shall be sent to the Inspector together with the fees prescribed in this Schedule.

Serial No.	Category of Establishment.	Fee. Rs.	a.	p.
1	Commercial establishments employing ten or more employees.	5	0	0
2	Commercial establishments employing less than ten employees.	2	8	0
3	Shops other than shops dealing wholly in milk, vegetables, fruits, fish, meat, bread, *pan*, *bidi*, cigarettes and matches, and employing ten or more employees.	5	0	0
4	Shops other than shops dealing wholly in milk, vegetables, fruits, fish, meat, bread, *pan*, *bidi*, cigarettes and matches, and employing less than ten employees.	2	8	0
5	Shops dealing wholly in milk, vegetables, fruits, fish, meat, bread, *pan*, *bidi*, cigarettes and matches.	1	0	0
6	Residential hotels	5	0	0
7	Restaurants and eating houses employing ten or more employees.	5	0	0
8	Restaurants and eating houses employing less than ten employees.	2	8	0
9	Theatres and other places of public amusement or entertainment.	5	0	0
10	Establishments engaging no employees	1	0	0

SCHEDULE II.

(*See* rule 7.)

The notice of change in Form D shall be sent to the Inspector together with the fees prescribed in this Schedule.

Serial No.	Category of Establishments.	Fees.		
		Rs.	a.	p.
1	Commercial establishments employing ten or more employees.	0	8	0
2	Commercial establishments employing less than ten employees.	0	4	0
3	Shops other than shops dealing wholly in milk, vegetables, fruits, fish, meat, bread, *pan*, *bidi*, cigarettes and matches and employing ten or more employees.	0	8	0
4	Shops other than shops dealing wholly in milk, vegetables, fruits, fish, meat, bread, *pan*, *bidi*, cigarettes and matches and employing less than ten employees.	0	4	0
5	Shops dealing wholly in milk, vegetables, fruits, fish, meat, bread, *pan*, *bidi*, cigarettes and matches.	0	2	0
6	Residential hotels	0	8	0
7	Restaurants and eating houses employing ten or more employees.	0	8	0
8	Restaurants and eating houses employing less than ten employees.	0	4	0
9	Theatres and other places of public amusement or entertainment.	0	8	0
10	Establishments engaging no employees	0	2	0

THE BOMBAY SUGARCANE CESS ACT, 1948 (BOM. LXXXII OF 1948).

G. N., F. D., No. 7403/33-S. T.(2), dated 1st March 1949 (B. G., Pt. IV-B, p. 371). S. 3

In exercise of the powers conferred by section 3 of the Bombay Sugarcane Cess Act, 1948 (Bom. LXXXII of 1948), the Government of Bombay is pleased to specify the following factories, the area comprised in each of which shall be a local area for the purposes of the said Act, namely :—

Name of factory.	Location.
(1) The Belapur Company, Ltd. ...	Harigaon, District Ahmednagar.
(2) The Belwandi Sugar Farm, Ltd. ...	Belvandi do.
(3) Shree Changdeo Sugar Mills ...	Near Puntamba do.
(4) The Godavari Sugar Mills, Ltd. ...	Saharwadi do.
(5) The Maharashtra Sugar Mills, Ltd.	Tilaknagar do.
(6) The Somaiya Sugar Factory (controlled by Godavari Sugar Mills, Ltd.).	Laxmiwadi via Kopargaon do.
(7) The Ravalgaon Sugar Farm, Ltd.	Ravalgaon, District Nasik.
(8) The Walchandnagar Sugar Works of Walchand Industries, Ltd.	Walchandnagar, District Poona.
(9) The Brihan Maharashtra Sugar Syndicate, Ltd.	Borgaon, District Sholapur.
(10) The Saswad Mali Sugar Factory, Ltd.	Akluj, District Sholapur.

G. N., F. D., No. 7422/33(2)S. T., dated 1st March 1949 (B. G., Pt. IV-B, p. 372). S. 3

In exercise of the powers conferred by section 3 of the Bombay Sugarcane Cess Act, 1948 (Bom. LXXXII of 1948), read with the Government Order, Finance Department, No. 7422/33-(1)-S.T., dated 23rd February 1949, the Government of Bombay is pleased to specify the following factories, the area comprised in each of which shall be a local area for the purposes of the said Act, namely :—

Name of factory.	Location.
1. The Phaltan Sugar Works, Ltd. ...	Sakharwadi, Phaltan State.
2. The Krishna Sugar Mills, Ltd. ...	Kittur via Kudchi, Miraj State (Junior).
3. The Ugar Sugar Works, Ltd. ...	Ugar Khurd, Sangli State.

G. N., F. D., No. 7422/33 (ii) S. T., dated 22nd April 1949 (B. G., Pt. IV-B, p. 937). S. 3

In exercise of the powers conferred by section 3 of the Bombay Sugarcane Cess Act, 1948 (Bom. LXXXII of 1948), read with Government Order, Finance Department, No. 7422/33(1)-S.T., dated the 22nd April 1949, the Government of Bombay is pleased to specify the following factory, the area comprised in which shall be a local area for the purposes of the said Act, namely :—

Name of factory.	Location.
The Kolhapur Sugar Mills, Limited ...	Kolhapur.

S. 4 **G. N., F. D., No. 7403/33-S.T. (2), dated 23rd February 1949 (B. G., Pt. I, p. 838).**

In exercise of the powers conferred by section 4 of the Bombay Sugarcane Cess Act, 1948 (Bom. LXXXII of 1948), the Government of Bombay is pleased to specify three annas per maund as the rate at which a cess shall be levied on the entry of sugarcane into a local area for consumption or use therein.

S. 14 Bombay Sugar-cane Cess Rules, 1949. **G. N., F. D., No. 7403/33-S.T. (1), dated 1st March 1949 (B. G., Pt. IV-B, p. 357).**

Amended by G. N., F. D., No. 7403/33-S.T., dated 7th November 1949.

Amended by G. N., F. D., No. 7403/33-S.T., dated 17th November 1949.

In exercise of the powers conferred by section 14 of the Bombay Sugarcane Cess Act, 1948 (Bom. LXXXII of 1948), the Government of Bombay is pleased to make the following rules :—

CHAPTER I.

Short title and Definitions.

1. These rules may be called the Bombay Sugarcane Cess Rules, 1949.

2. In these rules, unless there is anything repugnant in the subject or context,—

(*a*) " Act " means the Bombay Sugarcane Cess Act, 1948 ;

(*b*) " Section " means a section of the Act ;

(*c*) " Form " means a form appended to these rules ;

(*d*) " Government treasury " means in Greater Bombay, the Reserve Bank of India, Bombay, and in other places the treasury or sub-treasury of the District or taluka.

CHAPTER II.

Sugarcane Cess Authorities.

3. The State Government may for carrying out the purposes of the Act appoint—

(*a*) a Chief Sugarcane Cess Officer ;
(*b*) Supervising Sugarcane Cess Officers ;
(*c*) Sugarcane Cess Officers ; and
(*d*) Inspectors,

with jurisdiction over specified areas.

CHAPTER III.

Procedure regarding licence.

4. An application for obtaining a licence shall be made by an occupier of a notified factory to the Chief Sugarcane Cess Officer in Form I within a period of 30 days from the date on which a notification in respect of such factory has been issued under section 3. Such application shall be accompanied by a fee of rupees five.

5. The Chief Sugarcane Cess Officer shall, if satisfied that the application is in order, issue the licence in Form II. Such licence shall provide that the occupier shall comply from time to time with the provisions of the Act and the Rules made thereunder and such special conditions, if any, as are specified therein.

6. An application for renewal of a licence shall be made in Form III before the 1st day of June of every year commencing from 1950 to the Chief Sugarcane Cess Officer and shall be accompanied by the original licence and a fee of rupee one. The Chief Sugarcane Cess Officer shall, subject to the provisions of sub-section (*5*) of section 5, renew the licence for a further period of one year, and may insert such further conditions therein as may be prescribed by the State Government.

CHAPTER IV.

Procedure regarding assessment and collection of cess.

7. Every occupier shall maintain or cause to be maintained a correct account in Form IV of the sugarcane daily entering into the local area comprised in the notified factory.

8. A return under section 6 shall be in Form V and shall be furnished to the Sugarcane Cess Officer having jurisdiction in the area in which the notified factory is situated. The return shall be signed by the occupier or such officer of the factory as the occupier may, by notice to the Sugarcane Cess Officer, nominate for this purpose. It shall contain a correct statement of the quantities of sugarcane entering the local area and used or consumed therein, sugar produced in and leaving the local area, and the stocks of sugarcane and sugar held at the beginning and close of the month ; and it shall be authenticated by the person signing it as being true to the best of his knowledge and belief.

9. (1) The amount of cess payable by the occupier shall be paid each month either to the Chief Sugarcane Cess Officer or into a Government Treasury outside Greater Bombay.

(2) If the amount is paid to the Chief Sugarcane Cess Officer, it shall be paid within twenty-five days from the close of the month by a cheque drawn in favour of " The Reserve Bank of India on account of sugarcane cess " on a bank which has a clearing account with the Reserve Bank of India, and such cheque shall be accompanied by a pay-in slip in Form V-A duly filled in.

(3) If the amount of cess is paid into a Government treasury outside Greater Bombay, the occupier or officer of the factory nominated by him under rule 8 shall furnish the Sugarcane Cess Officer with the receipted treasury chalan showing such payment within thirty days from the close of the month.

10. (1) When proceeding under sub-section (2) of section 7, the Sugarcane Cess Officer shall serve on the occupier a notice in Form VI requiring him on a date not less than ten days from the date of issue of the notice and at a place specified therein either to attend in person or by an agent authorised in writing and to produce or to cause to be produced the account in Form IV and such other documents as may be specified in the notice and any other evidence on which such occupier may rely in support of such returns, if any, as he may have furnished and to furnish such information relating to the working of the notified factory as may be specified in the notice. On the day specified in the notice or as soon

afterwards as may be, the Sugarcane Cess Officer shall, after examining the accounts and documents produced and the information furnished and hearing such evidence as the occupier may bring and such other evidence as the Sugarcane Cess Officer may require on specified points, assess the amount of cess due from the occupier.

(2) If an occupier fails to comply with the terms of a notice issued under sub-rule (1), the Sugarcane Cess Officer shall assess to the best of his judgment the amount of cess due from such occupier.

11. (1) When the amount of cess due from any occupier in respect of any period has been assessed, the Sugarcane Cess Officer shall issue a notice to such occupier in Form VII for the payment of the amount assessed or such part thereof as remains unpaid.

(2) Within ten days of the service of such notice the occupier shall pay the amount specified therein by cheque to the Chief Sugarcane Cess Officer in the manner specified in sub-rule (2) of rule 9 or into a Government treasury outside Greater Bombay; and if the amount is paid into a Government Treasury the occupier shall by such date as may be specified in the notice, furnish the Sugarcane Cess Officer with the receipted treasury chalan showing such payment.

(3) If the amount already paid as cess in respect of any month exceeds the amount assessed under section 7 or in an appeal, if any, under section 8 the Sugarcane Cess Officer shall issue in favour of the occupier an order on the Treasury Officer for refund of the excess amount to the occupier.

(4) A notice under sub-section (*1*) of section 7 may be served on the occupier either by post or by delivering it or tendering it to the occupier or his agent at the notified factory.

12. If after the period allowed under rule 11, the amount of cess assessed or any part thereof remains unpaid, the Sugarcane Cess Officer shall apply to the Collector of the area in which the notified factory is situated or where the occupier resides or owns any property, for the recovery of the amount remaining unpaid as an arrear of land revenue and the Collector shall report to the Sugarcane Cess Officer by the 10th of each month, the amount of cess recovered by him.

13. The provisions of this chapter shall, as far as may be, apply to the levy of cess under section 15 and returns to be furnished under section 16.

Chapter V.

Procedure regarding inspection.

14. (1) An officer appointed under rule 3 shall have the powers conferred by section 9 in respect of a notified factory in his jurisdiction, provided that an Inspector shall not exercise such powers unless he possesses a specific warrant in Form VIII from the Sugarcane Cess Officer to whom he is subordinate authorising him so to do.

(2) An Officer appointed under rule 3 other than an Inspector may within the limits of his jurisdiction—

(*a*) enter any place which is or which he has reason to believe is used or to be used as a factory for inspection and examine any records, and accounts maintained, in so far as they are relevant to the purposes of the Act;

(*b*) record statement of any person whom he may deem necessary to examine for the proper discharge of his duties;

(*c*) call upon the occupier to furnish within such time as may be specified any information relating to the use or consumption of sugarcane in such factory and such other information as may be necessary for carrying out the purposes of the Act;

(*d*) exercise such other powers as may be reasonably necessary for carrying out the purposes of the Act and of the rules made thereunder.

15. Unless an authority specified in rule 14 deems it necessary to make a surprise visit, he shall give reasonable notice in writing to an occupier of his intention to enter the notified factory for inspection and to examine the records and accounts in so far as they are relevant to the purposes of the Act; and such authority shall in fixing the date and time for this purpose, as far as possible, have due regard to the convenience of the occupier.

CHAPTER VI.

Procedure regarding appeal.

16. The Chief Sugarcane Cess Officer shall be the appellate authority for the purpose of section 8.

17. (1) Every appeal shall—

(*a*) be in writing and bear a court fee stamp of rupee one;

(*b*) specify the name and address of the appellant;

(*c*) specify the date of the order appealed against;

(*d*) contain a clear statement of the facts;

(*e*) state precisely the relief prayed for, and

(*f*) be signed and verified by the appellant or an agent duly authorised in writing in this behalf by the appellant in the following form, namely:—

"I.....the appellant named in the above memorandum of appeal do hereby declare that what is stated therein is true to the best of my knowledge and belief.

.....
(Signature)."

(2) The memorandum of appeal shall be accompanied by the order appealed against in original or a certified copy thereof, and a certificate from the Sugarcane Cess Officer that the amount of cess assessed has been duly paid up, unless the omission to produce such order or copy or certificate is explained at the time of the presentation of the appeal to the satisfaction of the appellate authority.

(3) The memorandum of appeal shall either be presented to the appellate authority by the appellant or his agent or sent to him by registered post.

18. (1) If the memorandum of appeal does not comply with all the requirements of rule 17, the appeal may be summarily rejected:

Provided that no appeal shall be summarily rejected under this sub-rule unless the appellant is given such opportunity as the appellate authority thinks fit to amend such memorandum, so as to comply with the requirements of rule 17.

(2) An appeal may also be summarily rejected on any other grounds which should be recorded in writing by the appellate authority :

Provided that before an order summarily rejecting an appeal under this sub-rule is passed, the appellant shall be given a reasonable opportunity of being heard.

19. If the appellate authority does not reject the appeal summarily, it shall fix a date for hearing the appellant or his agent.

20. A copy of the order passed in appeal shall be sent to the Officer whose order forms the subject matter of the appeal proceedings.

CHAPTER VII.

Miscellaneous.

21. A notice under section 13 shall be given by a firm, association or company to the Chief Sugarcane Cess Officer by a letter in duplicate signed by a partner, member, director or shareholder authorised by it, as the case may be. The Chief Sugarcane Cess Officer shall send one copy of the letter to the Sugarcane Cess Officer having jurisdiction. If a person so nominated ceases to reside in the State of Bombay, or ceases to be a partner, member, director or shareholder of the firm, association or company, as the case may be, the firm, association or company shall give intimation of such fact to the Chief Sugarcane Cess Officer within fifteen days by a letter in duplicate signed as aforesaid.

22. (1) A notice under the Act or these rules may be served by any of the following methods :—

(*i*) by delivering it or tendering it to the occupier or his agent at the factory, or
(*ii*) by post :

Provided that if upon an attempt having been made to serve any such notice by any of the abovementioned methods, the authority concerned is satisfied that the party concerned is evading the service of notice or that for any other reason, the notice cannot be served by any of the abovementioned methods, the said authority shall cause such notice to be served by affixing a copy thereof at some conspicuous place in the factory or at the office address or residence of the party concerned, as far as may be known or ascertained, and such service shall be as effectual as if it had been made on the party concerned personally.

(2) When the officer serving a notice delivers or tenders a copy of the notice to the party concerned personally or to his agent he shall require the signature of the person to whom the copy is so delivered or tendered as acknowledgment of service endorsed on the original notice. When the notice is served by affixing a copy thereof in accordance with the proviso to sub-rule (1) the officer serving it shall return the original to the authority which issued the notice with a report endorsed thereon or annexed thereto stating that he so affixed the copy, the circumstances under which he did so and the name and address of the person, if any, by whom the building in which the party's office or residence is located was identified, and in whose presence the copy was affixed. The said officer shall also obtain the signature or thumb impression of the person identifying the party's office or residence, to his report.

(3) When service is made by post, the service shall be deemed to be effected by properly addressing, preparing and posting by registered post, the notice and, unless the contrary is proved, the service shall be deemed to have been effected at the time at which the notice would be delivered in the ordinary course of post.

(4) The authority at whose instance the notice was issued shall, if he is satisfied from the report of the messenger or the postal acknowledgment or by taking such evidence as he deems proper that the notice has been served in accordance with this rule, record an order to that effect. If he is not satisfied that the notice has been properly served, he may, after recording an order to that effect direct the issue of a fresh notice.

23. Any person who contravenes any provision of rule 7, 8 or 9, or fails to comply with any requirement under rule 10 or 14 (2) shall be punishable with fine which may extend to one thousand rupees.

FORM I.

(Rule 4.)

Form of application for licence for use and consumption of sugarcane in a notified factory.

To

The Chief Sugarcane Cess Officer, Bombay State.

I.....

member / director / shareholder of the firm or association / company known as.....

.....who am / which is the occupier of the notified factory known as

.....situated at.....being authorised to apply on its behalf do hereby apply for a licence under the Bombay Sugarcane Cess Act, 1948, for the use and consumption of sugarcane in the said factory.

2. A fee of Rs. 5 (rupees five only) is sent herewith in cash/by Postal Order.

3. Site of the factoy—
   Village or town .. ..
   Post Office .. ..
   Taluka .. .. ..
   District .. .. ..
   Nearest Railway Station ...

4. Name and complete address of occupier.

5. In the case of (*a*) a firm or (*b*) an association.

(*a*) Names and addresses of all the partners, or

(*b*) Names and addresses of the members of Managing Committee, Chairman, Secretary and other Officers.

6. In the case of an incorporated company,—

(*a*) name of the company and address of the registered office, and

(*b*) names and addresses of directors and of manager or managing agent, Secretary and the chief executive officer of the company.

7. Total quantity of sugarcane used or consumed by the factory during each of the three previous years ended the 30th June :—

(1) Year ended 30th June 194 ... maunds.
(2) Year ended 30th June 194 ... maunds.
(3) Year ended 30th June 194 ... maunds.

8. The number of days that the factory worked during each of the three previous years :—

(1) Year ended 30th June 194 ... days.
(2) Year ended 30th June 194 ... days.
(3) Year ended 30th June 194 ... days.

I, the applicant abovenamed, do solemnly affirm that the statements made above are true to the best of my knowledge and belief.

Dated .....

.....
Signature of applicant or signature of a person empowered to sign on behalf of firm or association or company.

Counterfoil.

Received an application for licence dated..... from.....along with a fee of Rupees five.

.....

Dated ..... Chief Sugarcane Cess Officer,.....

(This counterfoil should be given to the applicant.)

FORM II.

(Rule 5.)

Licence for use or consumption of sugarcane.

Licence No.....

Dated .....

This is to certify that....., occupier of....., a notified factory, situated at ....., is hereby authorised to use or consume sugarcane in the local area of the said factory under the Bombay Sugarcane Cess Act, 1948, and the rules made thereunder, and subject to the conditions hereinafter mentioned.

Conditions.—(1) The said occupier shall keep a true account of all sugarcane received and used or consumed and the the quantity of sugar manufactured and despatched out of the factory every day ;

(2) The said occupier shall regularly furnish to the Sugarcane Cess Officer returns prescribed under the Act before the seventh day of each month;

(3) The said occupier shall pay the cess leviable in respect of each month to the Chief Sugarcane Cess Officer or into a Government Treasury outside Greater Bombay, and in the latter case he shall send the receipted chalan to the Sugarcane Cess Officer within thirty days from the last day of each month ;

(4) The said occupier shall likewise pay the balance of cess assessed if any within the time allowed ;

(5) The said occupier shall furnish to any authority appointed under the Act, such information and such documents as may be required for the purposes of the Act ;

(6) The said occupier shall within fifteen days of any change in the ownership of the factory or in the composition of the membership, management or directors of the firm, association or company, as the case may be, give notice thereof to the Chief Sugarcane Cess Officer ;

and

(7) The said occupier shall from time to time comply with the provisions of the Act and the rules made thereunder from time to time.

This licence shall, unless cancelled in accordance with the provisions of the Act, remain in force till the 30th day of June 19.....

Seal.

.....

Chief Sugarcane Cess Officer.

Renewals.

No..... Dated .....

This licence is hereby renewed with effect from..... till the 30th day of June 19.....

.....

Seal. Chief Sugarcane Cess Officer.

No..... Dated .....

This licence is hereby renewed with effect from..... till the 30th day of June 19.....

.....

Seal. Chief Sugarcane Cess Officer.

FORM III.

(Rule 6.)

Form of Application for Renewal of Licence.

Licence No.....

To

The Chief Sugarcane Cess Officer,
Bombay State.

I.....member/director/shareholder of the or firm/association/company

known as.....

who am/which is the occupier of the notified factory known as.....

....situated at.....

being authorised to apply on its behalf, do hereby apply for the renewal of the licence Number.....dated the..... ..... granted under the Bombay Sugarcane Cess Act, 1948, for the use and consumption of sugarcane in the local area of the said factory.

2. A fee of Re. 1 (Rupee one only) in cash/by Postal Order is sent herewith.

.....
Signature of applicant or signature of a person authorised to sign on behalf of firm or association or company.

Dated.....

(This application must be accompained by the original licence.)

Counterfoil.

Licence No. .....

Received an application for renewal of licence dated the.....

from.....

along with a fee of rupee one.

.....
Chief Sugarcane Cess Officer .....

Dated .....

(This counterfoil should be given to the applicant.)

FORM IV.

(Rule 7.)

Register of Daily Arrivals of Sugarcane into the Local Area comprised in the Notified Factory.

Date month year	Quantity of sugarcane which entered the local area (in maunds.)					
	By cart.	By Motor vehicles.	By rail.	By other means of transport.	Total.	Signature of Officer maintaining Register.
Total for the month ...						

FORM V.

(Rule 8.)

Form of Return.

Licence No.....

Return for the month of.....19 .
Name of notified factory.....
Name of occupier.....
Address .....

I. *Sugarcane*—

1. Stock at the beginning of the month.....maunds.
2. Quantity received during the month.....maunds.
3. Quantity used or consumed during the month.....maunds.
4. Stock at the close of the month.....maunds.

II. *Finished Sugar*—

1. Stock at the beginning of the month.....Tons.
2. Quantity produced during the month.....Tons
3. Quantity despatched during the month.....Tons.
4. Stock at the close of the month.....Tons.

Rs. a. p.

III. 1. Amount of cess due on the quantity of sugarcane consumed or used in the local areas comprised in the factory during the month ... ...

2. Name of Government treasury in which the amount of cess in credited ... ...

3. Number and date of chalan ... { Chalan No..... Date .....

I.....being the occupier/authorised by the occupier.....of the above factory, do hereby solemnly affirm that the particulars stated above are true to the best of my knowledge and belief.

Signature .....

Status of the person signing return .....

Date .....

To

The Sugarcane Cess Officer, ...

FORM V-A.

(Rule 9.)

Provisional Receipt No.————

Old Custom House, Fort,
Bombay, 1949.

Received cheque No. dated
drawn on for Rupees
on account of Sugarcane Cess due for the month of
194 from occupier
of factory

Rs.

for Chief Sugarcane Cess Officer,
Bombay State.

N. B.—Final receipt will be sent when the cheque is cleared by the Bank. If the final receipt or the dishonoured cheque is not received within seven days from the date of the provisional receipt, a reference should be made to the Chief Sugarcane Cess Officer, Bombay State, Bombay.

Pay in Slip. Bombay, dated 194

To

The Chief Sugarcane Cess Officer,
Bombay State,
Bombay.

Please receive cheque No. dated
drawn on
for Rupees
on account of Sugarcane Cess due for the month of
194 .

Rs.

(Signature)
Occupier.
Factory.

Prov. Receipt No.
entered.
Cashier.

FORM VI.

(Rule 10.)

Notice under Rule 10 of the Bombay Sugarcane Cess Rules, 1949.

Licence No.....

To

(Name) .....

(Address) .....

Whereas I desire to satisfy myself that the return (s) furnished by you in respect of (name of notified factory).....Licence No..... for the month(s) of.....is/are* correct and complete, you are hereby directed to attend in person or by an agent authorised in writing at.....on.....at.....
.....place..... .....date.....time.....

and to produce or cause to be produced the following documents :—

.....

.....

.....

and to furnish the following information.....

.....

.....

.....

You may also produce any other evidence on which you rely in support of the return(s) furnished by you.

(Signed) .....
Sugarcane Cess Officer.

Seal

Date.....

* Strike out whichever is not required.

FORM VII.

(Rule 11.)

Notice under Rule 11 of the Bombay Sugarcane Cess Rules, 1949.

Licence No.....

To

.....

.....

You are hereby informed that the cess payable by you in respect of .....Licence No.....for the
(Name of notified factory)
month(s).....for the sugarcane used and consumed in your factory has been assessed at Rs.....

*2. The amount already paid by you in respect of the said month(s) is Rs.....and the balance due from you is Rs..... (.....).

3. You are hereby directed to pay the above amount into a Government treasury within ten days of the service of this notice and to furnish the receipt in proof of the payment to the undersigned not later than the.....day of..... 19 , failing which the said sum shall be recoverable from you as an arrear of land revenue,

Seal.

(Signed).....

Sugarcane Cess Officer.

Date.....

FORM VIII.

(Rule 14.)

Warrant for inspection of a notified factory by an Inspector.

Mr....., Inspector appointed under Rule 3 of the Bombay Sugarcane Cess Rules, 1949, is hereby authorised to enter the notified factory known as.....at.....or any

* Strike out whichever is not required.

part thereof, on the ..... day of ..... of 194 , or as soon thereafter as may be practicable, and to examine the working records and accounts of the said factory, and to take copies of or extracts from such records or accounts for the purpose of verification of the return(s) for the month(s) of.....and for obtaining necessary information for the purposes of the Act and the rules made thereunder.

Seal.

Signature.....

Sugarcane Cess Officer.

Date.....

APPENDIX

containing notifications to provide for carrying out adaptations or modifications in the various rules and orders made by the Government of Bombay under Bombay Acts in order to bring such rules and orders into accord with the provisions of the Constitution of India.

LEGAL DEPARTMENT.

Bombay Castle, 14th August 1950.

No. 11576.—In exercise of the powers conferred by the Acts specified in the first column of the Schedule hereto annexed the Government of Bombay is pleased to direct that the rules specified in the second column of the said Schedule shall be amended in the manner and to the extent specified in the corresponding entry in the third column thereof.

Schedule.

Acts.	Rules.	Amendments.
1	2	3
The Bombay Land Revenue Code, 1879 (Bom. V of 1879).	The Land Revenue Rules (1921) published in G. N., R. D., No. B. 205, dated 26th January 1921.	(1) Throughout the rules for the words "Provincial Government" the words "State Government" and for the words "the Crown", except as otherwise specifically provided, the word "Government" shall be substituted. (2) In rule 1, in the marginal note, the words "and extent of application" shall be deleted. (3) In rule 26— (*a*) in sub-rule (2), clause (c) shall be deleted; (*b*) in proviso (*ii*)— (*i*) for the words "an Indian or Foreign State", the words "a Part B State or Foreign State" shall be substituted, (*ii*) for the words "British side" the words "side of the State of Bombay" shall be substituted. (4) In rule 57 and Form G 2, for the words "servant of the Crown" the words "Government officer" shall be substituted (5) In rules 60, 70A, 70B, 70D for the words "property of the Crown" the words "Government property" shall be substituted. (6) In rules 64 and 129 for the words "trees belonging to the Crown" the words "Government trees" shall be substituted. (7) In sub-rule (2) of rule 81, the proviso shall be deleted and shall be deemed to have been deleted with effect on 5th March 1943. (8) In rule 82 to paragraph IV, the following proviso shall be added and shall be deemed to have been added with effect on 5th March 1943, namely :— "Provided that the non-agricultural assessment of plots of land not built upon in Development Department Schemes shall be limited to a maximum rate of Re. 1 per 250 square yards or part thereof." (9) In Form DD, for the words "servants of the Crown" the words "Government officers" shall be substituted.
Do.	Rules published in G. N., R. D., No. 9712/28, dated 6th April 1936.	(1) In rule 1 for the words "the Crown" the word "Government" shall be substituted. (2) In rule 2 for the words "Provincial Government" the words "State Government" shall be substituted.

Acts.	Rules.	Amendments.
1	2	3
The Bombay Smoke-nuisances Act, 1912 (Bom. VII of 1912 .	Rules published in G. N., G. D., No. 2810-A, dated 9th April 1913.	In rules 12, 15 and 20, for the words "Provincial Government" wherever they occur the words "State Government" shall be substituted.
The Bombay Town Planning Act 1915. (Bom. I of	Rules published in G. N., G. D., No. 772, dated 29th May 1916.	(*i*) In rules 8 and 23A, for the words "Provincial Government" the words "State Government" shall be substituted. (*ii*) In rule 11, omit "or the district of Karachi". (*iii*) In rules 11, 12 and 17 for the word "Government" the words "the State Government" shall be substituted. (*iv*) In rule 14A, for the word "Presidency" the word "State" shall be substituted.
The Bombay Entertainments Duty Act, 1923 (Bom. VI of 1923 .	Rules published in G. N., R. D., No. 4345-E/III, dated 25th January 1923.	In rule 26, for the words "Provincial Government" the words "State Government" shall be substituted.
The Bombay Local Boards Act, 1923 (Bom. VI of 1923).	The Bombay Local Boards Election Rules, 1932, published in G. N., G. D., No. 4455, dated 25th November 1932.	(1) In rules 6 and 10 (3) for the words "Provincial Government" the words "State Government" shall be substituted. (2) In rule 25, for the words "servants of the Crown" the words "Government officials" shall be substituted.
Do.	Rules published in G. N., G. D., No. 4456, dated 24th January 1924.	In rule 2 for the words "Provincial Government" the words "State Government" shall be substituted.
Do.	The Bombay Local Boards Account Code, 193, published in G. N., G. D., No. 9394, dated 8th December 1935.	(1) Throughout the rules for the words "Provincial Government" the words "State Government" shall be substituted. (2) In rules 58 and 63 for the words "servants of the Crown". the words "Government servants" shall be substituted. (3) In rule 88, for the words "servants of the Crown" the words "Officer of Government" shall be substituted. (4) In rule 173, for the words "servants of the Crown in connection with the affairs of the Province in the Revenue, Educational and other Departments" the words "Government Officers in connection with the affairs of the State in the Revenue, Education and other Departments" shall be substituted.

Acts.	Rules.	Amendments.
1	2	3
		(5) In form 4, item 8A and in form 20, item 11A, for the word "Government" the words "the State Government" shall be substituted.
		(6) In Forms 19, 20 and 43 where it occurs for the second time for the word "Provincial" the word "Government" shall be substituted.
		(7) In Form 43, for the word "Provincial" where it occurs for the first time, the word "State" shall be substituted.
The Bombay Local Boards Act, 1923.	Rules published in G. N., G. D., No. S. 128, dated 17th August 1936.	(1) In rules 10 (1) and 16 for the words "Provincial Government" the words "State Government" shall be substituted.
		(2) In rule 14 for the words "servants of the Crown" the words "Government servants" shall be substituted.
Do.	Rules published in G. N., G. D., No. 4460, dated 23rd January 1924.	In rule 5— (a) for the words "servants of the Crown" the words "Government servants", (b) for the words "Provincial Government" the words "State Government" shall be substituted.
	Rules published in G. N., G. D., No. 5001, dated 6th May 1925.	(1) Throughout the rules, for the words "Provincial Government" the words "State Government" shall be substituted.
		(2) For the words "servant of the Crown" and "servants of the Crown" wherever they occur the words "Government officer" and "Government officers" shall respectively be substituted.
		(3) In rule 5, for the words "imperial and Provincial works" the words "works of the Central and State Governments" shall be substituted.

Acts.	Rules.	Amendments.
1	2	3
		(4) In rule 22 (1A), for the words "provincial revenues" the words "State revenues" shall be substituted.
		(5) In rule 27, for the word "Province" the word "State" shall be substituted.
The Bombay Co-operative Societies Act, 1925 (Bom. VII of 1925).	The Bombay Co-operative Societies Rules, 1927 published in G. N., R. D., No. 5978/24, dated 11th August 1927.	(1) Throughout the rules, for the words "Provincial Government" the words "State Government" shall be substituted. (2) In rule 27, for the word "Province" the word "State" shall be substituted.
Do.	The Bombay Co-operative Tribunal Rules, 1948, published in G. N., R. D., No. 9114/45, dated 14th September 1948.	(1) In rule 2, in clause (*b*) for the words "office of profit under the Crown in India" the words "office of profit under the Government of India or the Government of any State" shall be substituted. (2) In rules 4 (1) and 6, for the words "Provincial Government" the words "State Government" shall be substituted.
The Bombay Maternity Benefit Act, 1929 (Bom. VII of 1929).	The Bombay Maternity Benefit Rules, 1929, published in G. N., G. D., No. 1066, dated 2nd August 1929.	In rule 3 (*f*), for the words "Ahmedabad and Karachi" the words "and Ahmedabad" shall be substituted.
The Bombay Borstal Schools Act, 1929 (Bom. XVIII of 1929).	The Dharwar Borstal School Rules, 1930, published in G. N., H. D., No. 6130/2, dated 25th November 1930.	(1) In rules 4, 14 and 15, for the words "Provincial Government" the words "State Government" shall be substituted. (2) In rule 14 (2) and the Schedule, for the word "Province" the word "State" shall be substituted.
The Bombay Local Fund Audit Act, 1930 (Bom. XXV of 1930).	The Bombay Local Fund Audit Rules, 1931, published in G. N., G. D., No. 7679, dated 11th December 1931.	In rule 33, the words "Municipal Corporation of the City of Karachi, and" shall be deleted.
The Bombay Finance Act, 1932 (Bom. II of 1932).	The Bombay Electricity Duty Rules, 1932, published in G. N., R. D., No. 8836/28, dated 14th September 1932.	In Form A, in entry 1, for the words "The Crown" the word "Government" shall be substituted.
Do.	The Bombay Newspaper Advertisements Tax Rules, 1949, published in G. N., F. D., No. 7494/33-ST, dated 28th May 1949.	(1) In rules 3 and 14 for the words "Provincial Government" the words "State Government" shall be substituted.

Acts.	Rules.	Amendments.
1	2	3
		(2) In rules 4 and 19, for the word "Province" the word "State" shall be substituted.
The Bombay Weights and Measures Act, 1932 (Bom. XV of 1932).	The Bombay Weights and Measures Rules, 1934, published in G. N., G. D., No. 9492, dated 5th June 1934.	In rule 136, for the word "Presidency" the word "State" shall be substituted.
The Bombay Village Panchayats Act, 1933 (Bom. VI of 1933).	Rules published in G. N., G. D., No. S. 174/1, dated 18th December 1934.	For the words "Provincial Government" wherever they occur the words "State Government" shall be substituted.
Do.	The Bombay Village Panchayats Election Rules, 1948, published in G. N., H. & L. G. D., No. S. 174/3-C, dated 2nd June 1948.	In rules 2 (7) and 12, for the words "Provincial Government" the words "State Government" shall be substituted.
Do.	The Bombay Village Panchayats Secretaries (Conditions of Service) Rules, 1948, published in G. N., H. & L. G. D., No. S. 174 (10), dated 24th November 1948.	In rules 6, 8, 10 and 17, for the words "Provincial Government" the words "State Government" shall be substituted.
Do.	The Village Panchayats Budget and Accounts Rules, 1934, published in G. N., G. D., No. S. 174/6, dated 2nd January 1935.	In Forms 1 and 2 for the words "Provincial Government" the words "State Government" shall be substituted.
Do.	Rule published in G. N., G. D., No. S. 174/11/1, dated 19th January 1940.	In clause (*d*), for the words "Provincial Government" the words "State Government" shall be substituted.
Do.	The Bombay Village Panchayats Taxes and Fees Rules, 1944, published in Commissioner's Notification No. V.P. 29, dated 24th February 1944.	In rule 51, for the words "Provincial Government" the words "State Government" shall be substituted
The Bombay Live-stock Improvement Act, 1933 (Bom. XXII of 1933).	The Bombay Live-stock Improvement Rules, 1935, published in G. N., R. D., No. 818/33, dated 19th September 1935.	In rule 6— (*a*) for the words "Presidency" the word "State" shall be substituted, (*b*) the words "excluding Sind and for every 40 cows in a village in Sind" shall be deleted.

Acts.	Rules.	Amendments.
1	2	3
The Bombay Trade Disputes Conciliation Act, 1934 (Bom. IX of 1934).	The Bombay Trade Disputes Conciliation Rules, 1934, published in G. N., P. & R. D., No. 340/34, dated 12th January 1935.	(1) In rules 3 and 4, for the words "British India" the words "a Part A State or Part C State" shall be substituted. (2) In rule 5 (3), for the words "Provincial Government" the words "State Government" shall be substituted.
The Bombay Devadasis Protection Act, 1934 (Bom. X of 1934).	The Bombay Devadasis Protection Rules, 1936, published in G. N., R. D., No. 1015/33, dated 27th May 1936.	In rule 6, for the words "Provincial Government" the words "State Government" shall be substituted.
The Bombay Nurses, Midwives and Health Visitors Registration Act, 1935 (Bom. VII of 1935).	The Bombay Nurses, Midwives and Health Visitors Registration Rules, 1935, published in G. N., G. D., No. 909/33, dated 1st August 1935.	(1) Throughout the rules, except as otherwise provided for the word "Province" the word "State" shall be substituted. (2) For the words "Royal Indian Navy" and "Royal Indian Air Force" wherever they occur the words "Indian Navy" and "Indian Air Force" shall respectively be substituted. (3) In rules 4(1)(*a*) and 26 for the words "Provincial Government" the words "State Government" shall be substituted. (4) In rule 9-A for the words "Provinces of India" the words and letters Part A States or Part C States" shall be substituted.
The Bombay Public Trust Registration Act, 1935 (Bom. XXV of 1935).	The Bombay Public Trusts Registration Rules, 1937, published in G. N., R. D., No. 4792/33, dated 8th December 1937.	(1) In rule 10-A, for the word "Province" the word "State" shall be substituted. (2) In rule 19— (*a*) For the words "His Majesty's treasury" the words "Government treasury" shall be substituted. (*b*) for the words "Local Government" the words "State Government" shall be substituted. (*c*) for the word "Presidency" the word "State" shall be substituted.
The Bombay Motor Vehicles Tax Act, 1935 (Bom. XXXIV of 1935).	The Bombay Motor Vehicles Tax Rules, 1940, published in G. N., R. D., No. 2544/39-III, dated 7th June 1940.	(1) Throughout the rules, except otherwise provided, for the word "Province" the word "State" shall be substituted. (2) In rule 2, for clause (*c*), the following shall be substituted "(c) 'State' means the State of Bombay."

Acts.	Rules.	Amendments.
1	2	3
		(3) In rule 20-A,— (a) for the words "Provincial Government" the words "State Government" shall be substituted. (b) for the words "other Province, Indian State" the words "other State" shall be substituted. (c) for the words "such Province, State" the words "such State" shall be substituted. (4) Rule 21-A and Second Schedule shall be deleted. (5) In the Note below rule 22 the figures and letter "21-A" shall be deleted. (6) In rule 23 for the figures, word and letter "21 or 21-A" the word and figures "or 21" shall be substituted.
The Parsi Public Trusts Registration Act, 1936 (Bom. XXIII of 1936).	The Parsi Public Trusts Registration Rules, 1937, published in G.N., R. D., No. 6336/33, dated 8th December 1937.	(1) In rule 10-A, for the word "Province" the word "State" shall be substituted. (2) In rule 20— (a) for the words "His Majesty's treasury" the words "a Government treasury" shall be substituted. (b) for the words "Local Government" the words "State Government" shall be substituted. (c) for the word "Presidency" the word "State" shall be substituted.
The Bombay Probation of Offenders Act, 1938 (Bom. XIX of 1938).	The Bombay Probation of Offenders Rules, 1940, published in G. N., H. D., No. 5538/3-VI, dated 28th August 1941.	(1) In rules 3 and 5 for the words "Provincial Government" the words "State Government" shall be substituted. (2) In the Schedule,— (a) in Forms I and II,— (i) for the words "His Majesty the King, Emperor of India, and to all His subjects" wherever they occur the words "Government and all the citizens of India" shall be substituted. (ii) for the words "His Majesty the King, Emperor of India" and the words "His Majesty" wherever they occur, the word "Government" shall be substituted. (b) in Form II for the words "British India" the words and letters "a Part A State or Part C State" shall be substituted.

Acts.	Rules.	Amendments.
1	2	3
The Bombay Medical Practitioners' Act, 1938 (Bom. XXVI of 1938).	The Bombay Medical Practitioners' Rules, 1939, published in G. N., G. D., No. 3334/33, dated 1st November 1939	(1) In rules 27 (5), 78 (2), 101 and Appendix G, for the word "Province" the word "State" shall be substituted. (2) In rules 79 and 101 for the words "His Majesty's Services" the words "Government Services" shall be substituted. (3) In Appendix G, for the words "the Dominion of India" the word "India" shall be substituted. (4) In Appendix I for the words "His Majesty's Defence Forces" the words "the Armed Forces of the Union" shall be substituted.
The Bombay Medical Practitioners' Act, 1938 (Bom. XXVI of 1938).	The Bombay Faculty of Indian Systems of Medicine Rules, 1949, published in G. N., H. & L. G. D., No. 6088/33, dated 22nd July 1949.	In rule 27 (5) for the word "Province" the word "State" shall be substituted.
The Bombay Revenue Tribunal Act, 1939 (Bom. XII of 1939).	The Bombay Revenue Tribunal Rules, 1939, published in G. N., R. D., No. 4877/33, dated 31st July 1939.	(1) In rules 2 (c) and 4 (1) for the words "Crown in India" the words "Government of India or the Government of any State" shall be substituted. (2) In rule 6 for the words "Provincial Government" the words "State Government" shall be substituted.
The Bombay Agricultural Produce Markets Act, 1939 (Bom. XXII of 1939).	The Bombay Agricultural Produce Markets Rules, 1941, published in G. N., R. D., No. 991/33, dated 28th June 1941.	In rule 6, for the words "British India" the word "India" shall be substituted.
The Bombay Land Improvement Schemes Act, 1942 (Bom. XXVIII 1942).	The Bombay Land Improvement Schemes Rules, 1949, published in G. N., A. & F. D., No. 1707-II-G., dated 16th November 1949.	In rule 7 and Form No. II for the words "Provincial Government" the words "State Government" shall be substituted.
The Bombay Beggars Act, 1945 (Bom. XXIII of 1945).	The Bombay Beggars Rules, 1946, published in G. N., H. D., No. 7701/4/II, dated 14th November 1946.	(1) In rules 2, 3, 16 and 20 for the words "Provincial Government" the words "State Government" shall be substituted. (2) In Form D for the word "Province" the word "State" shall be substituted.

Acts.	Rules.	Amendments.
1	2	3
The Bombay Sales Tax Act, 1946 (Bom. V of 1946).	The Bombay Sales Tax Tribunal Rules, 1946, published in G. N., F. D., No. 6513/33-S. O., dated 2nd April 1946.	(1) In rule 2 (*b*), for the words "Crown in India" the words "Government of India or the Government of any State" shall be substituted. (2) In rules 4 (2) and 6 for the words "Provincial Government" the words "State Government" shall be substituted.
The Bombay Sales Tax Act, 1946 (Bom V of 1946).	The Bombay Sales Tax Rules, 1946, published in G. N., F.D., No.6506/36, S. O., dated 28th June 1946.	(1) Throughout the rules for the words "Provincial Government" and "Province" the words "State Government" and "State" shall respectively be substituted. (2) In rules 5A and 5C for the words "Dominion of India" the word "India" shall be substituted. (3) In rule 5C for the words "Province/State" the word "State" shall be substituted. (4) In Form XXVIII, for the words "Provincial Revenue" the words "Consolidated Fund of the State" shall be substituted.
The Bombay Sales of Motor Spirit Taxation Act, 1946 (Bom. VI of 1946).	The Bombay Sates of Motor Spirit Taxation Rules, 1948, published in G. N., R. D., No. 2305/45, dated 9th July 1948.	In the note below Form A and in Forms B and C for the word "Province" the word "State" shall be substituted.
The Bombay Cotton (Statistics) Act, 1946 (Bom. XXVII of 1946).	The Bombay Cotton (Statistics) Rules,1947, published in G. N., F. D., No. 6280/33-D, dated 3rd July 1947.	In rule 3 and Form A (at both the places) for the word "Province" the word "State" shall be substituted.
The Bombay Industrial Relations Act, 1946 (Bom. XI of 1947).	The Bombay Industrial Relations Rules, 1947, published in G. N., P. & S. D., No. 1237/46, dated 20th September 1947.	(1) Throughout the rules for the words "Provincial Government" the words "State Government" shall be substituted. (2) In rule 9 and Forms E, G and H for the word "Province" the word "State" shall be substituted.

Acts.	Rules.	Amendments.
1	2	3
The Bombay Industrial Relations Act, 1946 (Bom. XI of 1947).	The Bombay Wage Board Rules, 1948, published in G. N., Lab. D., No. 1237/46, dated 17th January 1949.	In rules 4, 6 and 8, for the words "Provincial Government", the words "State Government" shall be substituted.
The Bombay Hindu Divorce Act, 1947 (Bom. XXII of 1947).	The Bombay Hindu Divorce Rules, 1948, published in G. N., H. D., No. 709/5-II, dated 7th January 1949.	In rule 2, for the word "Province" at both the places where it occurs the word "State" shall be substituted.
The Bombay Agricultural Debtors Relief Act, 1947 (Bom. XXVIII of 1947).	The Bombay Agricultural Debtors Relief Rules, 1947, published in G. N., R. D., No. 4684/45, dated 19th July 1947.	(1) In rule 8 and Form No. 7, for the words "Provincial Government" the words "State Government" shall be substituted. (2) In Forms Nos. 1, 2 and 4 for the word "Province" the word "State" shall be substituted.
The Bombay Money-Lenders Act, 1946 (Bom. XXXI of 1947).	The Bombay Money-Lenders Rules, 1947, published in G. N., R. D., No. 4312/45, dated 29th October 1947.	In Form 2, in entries 6 and 7, for the word "Province" the word "State" shall be substituted.
The Bombay Habitual Offenders Restriction Act, 1947 (Bom. LI of 1947).	The Bombay Habitual Offenders Restriction Rules, 1948, published in G. N., H. D., No. 3504/5, dated 11th February 1949.	In sub-rule (1) of rule 29 for the word "Province" the word "State" shall be substituted.
The Bombay Primary Education Act, 1947 (Bom. LXI of 1947).	The Bombay Primary Education Rules, 1949, published in G. N., E. & I. D., No. 7896-B, dated 19th March 1949.	(1) Throughout the rules, except as otherwise provided for the words "Province" and "Provincial Government" the words "State" and "State Government" shall respectively be substituted. (2) In rule 129 (2), the words "Province or" shall be deleted. (3) In the heading to Chapter X, rule 171, instruction 3 in Schedule J (at both the places and Schedule L (at both the places) for the word "Provincial" the word "State" shall be substituted. (4) In rule 196 (2), for the words "Provincial Revenues" at both the places where they occur, the words "the Consolidated Fund of the State" shall be substituted.
The Bombay Prevention of Fragmentation and Consolidation of Holdings Act, 1947 (Bom. LXII of 1947).	The Bombay Prevention of Fragmentation and Consolidation of Holdings Rules, 1948, published in G. N., R. D., No. 7031/45, dated 31st July 1948.	In Forms A and B for the words "Provincial Government" the words "State Government" shall be substituted.
The Bombay Lotteries and Prize Competitions Control and Tax Act, 1948 (Bom. LIV of 1948).	The Bombay Lotteries and Prize Competitions Control and Tax Rules, 1949, published in G. N., H. D., No. 7049/5, dated 1st April 1949.	(1) In rule 2 (*d*), for the words "Provincial Government" the words "State Government" shall be substituted. (2) In rule 4 for the words "Province" the word "State" shall be substituted.

Acts.	Rules.	Amendments.
1	2	3
The Bombay Tenancy and Agricultural Lands Act, 1948 (Bom. LXVII of 1948).	The Bombay Tenancy and Agricultural Lands Rules, 1949, published in G. N., R. D., No. 10138/45, dated 27th April 1949.	In sub-rules (2) and (3) of rule 5 for the words "Provincial Government" the words "State Government" shall be substituted.
The Bombay Children Act, 1948 (Bom. LXXI of 1948).	The Bombay Children and Juvenile Courts Rules, 1936, published in G. N., H. D., No. 6978/3, dated 27th March 1936.	(1) In rules 3, 4, 7, 14 and 21 for the words "Provincial Government" the words "State Government" shall be substituted. (2) In Schedule A, for the words "Crown for the purposes of the Province" the words "State Government" shall be substituted. (3) In Schedule B, for the word "Province" the word "State" shall be substituted.
The Bombay Khar Lands Act, 1948 (Bom. LXXII of 1948).	The Bombay Khar Lands Rules, 1949, published in G. N., R. D., No. 10558/45, dated 31st December 1949.	(1) Throughout the rules for the words "Provincial Government" the words "State Government" shall be substituted. (2) In Form VIII for the word "Province" at both the places where it occurs the word "State" shall be substituted.
The Bombay Sugar-cane Cess Act, 1948 (Bom. LXXXII of 1948).	The Bombay Sugar-cane Cess Rules, 1949, published in G. N., F. D., No. 7403/33, S. T. (1), dated 1st March 1949.	(1) In rules 3 and 6, for the words "Provincial Government" the words "State Government" shall be substituted. (2) In rule 21, Form I, Form III and Form V-A for the word "Province" the word "State" shall be substituted.
The Bombay Prohibition Act, 1949 (Bom. XXV of 1949).	The Bombay Through Transport Rules, 1949, published in G. N., R. D., No. 10484/45 (g), dated 16th June 1949.	In rules 1(2), 2(2) and (3), and 3, for the word "Province" the word "State" shall be substituted.

By order of the Governor of Bombay,

P. M. LAD,

Secretary to Government.

LEGAL DEPARTMENT.

Bombay Castle, 14th August 1950.

No. 11577.—In exercise of the powers conferred by the Acts specified in the first column of the Schedule hereto annexed the Government of Bombay is pleased to direct that the rules specified in the second column of the said schedule shall be amended in the manner and to the extent specified in the corresponding entry in the third column thereof.

Schedule.

Acts.	Rules.	Amendments.
1	2	3
The Bombay Rent-free Estates Act, 1852, and the Exemptions from Land Revenue (No. 2) Act, 1863.	Rules published in G. N., R. D., No. 10336, dated 12th October 1908.	In rules 1 and 5 for the words "Provincial Government" the words "State Government" shall be substituted.
Do.	Rules published in G. N., P. D., No. 2942, dated 17th May 1898.	Throughout the rules for the words "Provincial Government" the words "the State Government" shall be substituted.

Acts.	Rules.	Amendments.
1	2	3
The Bombay City Land Revenue Act, 1876.	Rules published in G. N., R. D., dated 17th January 1877.	In rule 1 for the words "Provincial Government" the words "State Government" shall be substituted.
The Bombay Irrigation Act, 1879 (Bom. VII of 1879).	Rules published in G. N., P. W. D., No. C. W. 6543, dated 30th March 1920.	Throughout the rules for the word "Government" the words "the State Government" shall be substituted.
Do. ..	Rules published in G. N., P. W. D., No. 401/27, dated 27th July 1936.	In rules 2 (*b*), 3 (2), 6, 7, 14 (*c*) and 17 for the word "Government" the words "the State Government" shall be substituted.
Do. ..	Bombay Canal Rules, 1934, published in G. N., P. W. D., No. 2353/27, dated 4th January 1934.	(1) In the preamble for the word "Province" the word "State" shall be substituted. (2) Throughout the rules for the words "Provincial Government" the words "State Government" shall be substituted.
The Bombay Highway Act, 1883 (Bom. I of 1883).	Rules published in G. N., P. W. D., No. 2, dated 4th January 1884.	In rule 15 for the word "Government" the words "the State Government" shall be substitute
The Bombay Court of Wards Act, 1905 (Bom. I of 1905).	Bombay Court of Wards Rules, 1908, published in G. N., R. D., No. 9606-A, dated 21st September 1908.	(*i*) Throughout the rules for words "Provincial Government" the words "State Government" shall be substituted. (*ii*) In rule 1 (2) for the word "Province" the word "State" shall be substituted. (*iii*) In rule 22 (*iii*) for the words "servants of the Crown" the words "Government servants" shall be substituted.
The Prince of Wales Museum Act, 1909 (Bom. III of 1909).	Rules published in G. N., G. D., No. 1386, dated 6th March 1911.	(*i*) In rule 7 for the word "Government" the words "State Government" shall be substituted. (*ii*) In rules 18-A, 29 and 34 for the word "Government" the words "the State Government" shall be substituted.
The Bombay Medical Act, 1912 (Bom. VI of 1912).	Rules published in G. N., G. D., No. 6774, dated 22nd September 1913.	In rule 7, for the word "Government" the words "the State Government" shall be substituted.
The City of Bombay Primary Education Act, 1920 (Bom. XV of 1920).	Rules published in G. N., E. D., No. 236, dated 28th September 1923.	(*i*) In rule 1 for the words "Government" and "Presidency" the words "State Government" and "State" shall respectively be substituted.

Acts.	Rules.	Amendments.
1	2	3
		(*ii*) In rule 2 for the words "Bombay Presidency" the words "Bombay State" shall be substituted. (*iii*) In rule 4, for the word "Government" the words "the State Government" shall be substituted. (*iv*) In rule 6 for the words "Provincial Government" the words "State Government" shall be substituted.
The Bombay Betting Tax Act, 1925 (Bom. VI of 1925).	The Bombay Totalisator Tax Rules, 1925, published in G. N., R. D., No. 5457-E-24, dated 22nd December 1925.	In rule 3 for the words "Provincial Government" the words "State Government" shall be substituted.
Do. ..	The Bombay Betting Tax Rules, 1931, published in G. N., R. D., No. 5457/24, dated 24th June 1931.	In rule 5 for the words "Provincial Government" the words "State Government" shall be substituted.
The Bombay Non-Agriculturists' Loans Act, 1928 (Bom. III of 1928).	The Bombay Non-Agriculturists' Loans Rules, 1930, published in G. N., F. D., No. 6004-E, dated 1st December 1930.	(1) In rule 8 in the table— (*a*) in column 2 the words 'Presidency excluding Sind" shall be deleted. (*b*) in column 3 relating to Sind shall be deleted. (2) In Schedule II, for the words "Secretary of State for India in Council" wherever they occur the words "Governor of Bombay" shall be substituted.
The Bombay Legislature Members' Salaries and Allowances Act, 1937 (Bom. III of 1937).	The Bombay Legislature Members' Salaries and Allowances Rules, 1938, published in G. N., L. D., No. 98, dated 5th January 1938.	(1) Throughout the rules, for the words "Chamber" and "Chambers" the words "House" and "Houses" shall respectively be substituted. (2) In rule 3, for the words and figures "section 68 of the Government of India Acts 1935" the words and figure "article 190 of the Constitution" shall be substituted. (3) In the Explanation to sub-rule (2) of rule 4, for the words "Provincial Government" the words "State Government" shall be substituted. (4) Rule 5 shall be deleted.

Acts.	Rules.	Amendments.
1	2	3
		(5) In rule 6, (*i*) for the words and figures "rules 4 and 5" the word and figure "rule 4" shall be substituted. (*ii*) the words "daily allowance and" shall be deleted.
		(6) (*i*) Clause (*b*) of rule 7 shall be deleted. (*ii*) In the marginal notes to rules 7, 8 and 8A, for the word "Allowances" the words "travelling allowance" shall be substituted.
		(7) In rule 8, (*i*) clause (*a*) shall be deleted. (*ii*) for the words, brackets and letter "that would be admissible to him under clause (*a*) of this rule, if he remains at such place during such period" the words "that was admissible to him immediately before the commencement of the Constitution, if he remained at such place during such period" shall be substituted.
		(8) In rule 8A,— (*i*) clause (*a*), of sub-rule (1) and, of sub-rule (2) shall be deleted. (*ii*) in sub-rules (1) and (2) for the words, brackets and letter "that would be admissible to him under clause (*a*) of this sub-rule if he remains at such place during such period" the words "that was admissible to him immediately before the commencement of the Constitution if he remained at such place during such period" shall be substituted. (9) In rule 9, the word "daily" at both the places where it occurs shall be deleted.
		(10) In rule 10— (*i*) in sub-rule (2) the words "daily or" shall be deleted. (*ii*) in the marginal note, for the word "Daily" the word "Conveyance" shall be substituted.
		(11) In rule 11,— (*a*) in sub-rule (1) for the words "daily or conveyance allowance or all or any two of them" the words "or conveyance allowance or both" shall be substituted.

Acts.	Rules.	Amendments.
1	2	3
		(*b*) for sub-rule (2), the following shall be substituted, namely:— "(2) Before the bill is submitted to the Accountant General the member concerned shall give a certificate in the following form on the bill— "Certified that I have not already drawn travelling allowance for the same journey or conveyance allowance for the same attendance in another capacity." (*c*) sub-rules (4) and (4A) shall be deleted. (*d*) in sub-rule (4B), the words "daily or" shall be deleted. (12) Proviso to rule 12 shall be deleted.
The Bombay Gas Supply Act, 1939 (Bom. IX of 1939).	The Bombay Gas Supply Rules, 1940, published in G. N., P. W. D., No. 2186/36-III, dated 6th November 1940.	In rule 4, for the words "British Indian" the word "Indian" shall be substituted.
The Bombay Lifts Act, 1939 (Bom. X of 1939).	The Bombay Lifts Rules, 1940, published in G. N., P. W. D., No. 8225/27-VI, dated 8th April 1940.	In Form G, for the word "Province" the word "State" shall be substituted.
The Bombay Home Guards Ordinance, 1946 (Ordinance No. I of 1946).	The Bombay Home Guards Rules, 1946, published in G. N., H. D., No. 893/5, dated 12th November 1946.	(1) In the second proviso to sub-rule (2) and sub-rule (4) of rule 2, and rules 10 and 11 for the words "Provincial Government" the words "State Government" shall be substituted. (2) In Form A for the words "subject of the Dominion of India" the words "citizen of India" shall be substituted.
The Bombay Refugees Act, 1948 (Bom. XXII of 1948).	The Bombay Refugees Rules, 1949, published in G. N., Reh. D., No. R. 133-I-B, dated 6th June 1949.	1. In rules 9, 10 (4) and 12 (2) for the words "Provincial Government" the words "State Government" shall be substituted. 2. In Form A— (1) for the word "Province" wherever it occurs the word "State" shall be substituted; and (2) for the words "the Dominion of India" the word "India" shall be substituted.

Acts.	Rules.	Amendments.
1	2	3
The Bombay Land Requisition Act, 1948 (Bom. XXXIII of 1948).	The Bombay Land Requisition (Determination of Compensation) Rules, 1949, published in G. N., R. D., No. Misc. 9293, dated 24th May 1949.	In rules 2 (*b*) and 5 (2) for the words "Provincial Government" the words "State Government" shall be substituted.
	The Bombay Land Requisition (Exemption) Rules, 1948, published in G. N., H. & L. G. D., No. 0961/5788-N. dated 28th July 1948.	In rules 5 and 6, for the words "Provincial Government" the words "State Government" shall be substituted.

By order of the Governor of Bombay,

P. M. LAD,
Secretary to Government.

LEGAL DEPARTMENT

Bombay Castle, 14th August 1950.

No. 11578.—In exercise of the powers conferred by the Acts specified in the first column of the Schedule hereto annexed the Government of Bombay is pleased to direct that the notifications and orders specified in the second column of the said schedule shall be amended in the manner and to the extent specified in the corresponding entry in the third column thereof.

Schedule.

Acts.	Notifications and orders.	Amendments.
1	2	3
The Civil Jails Act, 1874.	G. N., J. D., dated 15th April 1875 (*B. G.*, Part I, p. 369).	The words "the Province of Sind, Aden and" shall be deleted.
Do.	... G. N., J. D., dated 15th April 1875 (*B. G.*, Part I, p. 370).	In paragraph 1, the entries "Aden", "Karachi", "Hyderabad" nd "Shikarpur" shall be deleted.

Acts.	Notifications and orders.	Amendments.
1	2	3
The Bombay Ferries and Inland Vessels Act, 1868 (Bom. II of 1868).	G.N., P.W.D., No. 4089, dated 20th November 1923.	For the words and brackets "Presidency of Bombay (excluding Aden)" the words "State of Bombay" shall be substituted.
The Bombay Land Revenue Code, 1879.	G.N., R.D., No. 9159, dated 18th November 1896.	In clause (1) (*i*) in entry (1), the words "and the Commissioner in Sind"; (*ii*) entry (2); (*iii*) in entry (4) the words "and the Colonization Officer, Jamrao Canal"; and (*iv*) entry (8) shall be deleted.
Do.	... G. N., R.D., dated 6th October 1869.	The entry relating to "Districts in Sind" shall be deleted.
The Bombay District Municipal Act, 1901 (Bom. III of 1901).	G.N., G.D., No. 9114, dated 4th June 1935.	(1) In the preamble the words "habitually resident within, or" shall be deleted. (2) In the Schedule entries 1 to 21 appearing at the end shall be deleted.
The Bombay Local Boards Act, 1923 (Bom. VI of 1923).	G. N., G. D., No. 4453-A, dated 19th August 1924.	In clause (2), the words "and of attachment of Khoti villages" shall be deleted.
Do.	... G. N., G. D., No. 4453, dated 28th March 1928.	The portion beginning with the words "In the case of Sind" and ending with the figure "1925." shall be deleted.
The Bombay Municipal Boroughs Act, 1925 (Bom. XVIII of 1925).	G. N., G. D., No. 552, dated 7th July 1930.	(1) The word "Karachi" shall be deleted. (2) For the words "Ratnagiri and Hyderabad" the words "and Ratnagiri" shall be substituted.
Do.	... G.N., G.D., No. 9114, dated 3rd April 1934.	(*i*) In column 1 for the words "Presidency excluding Sind" the words "State of Bombay" shall be substituted. (*ii*) the following portion shall be deleted :— "(1) Larkana (2) Hyderabad (3) Shikarpur (4) Sukkur. } Hiranand Leper Asylum, Mangho Pir."
Do.	... G. N., G. D., No. 3896, dated 22nd March 1929.	In the Schedule entries 24 to 27 (both inclusive) shall be deleted.

Acts.	Notifications and orders.	Amendments.
1	2	3
The Bombay Finance Act, 1932 (Bom. II of 1932).	G.N., F.D., No. 7493/33-St. dated 23rd December 1949.	In Schedule for the words "Provincial Government" the words "State Government" shall be substituted.
Do.	... G.N., F.D., No. 9326-A (4), dated 31st March 1939.	For the words "Province" and "Provincial Government" the words "State" and "State Government" shall respectively be substituted.
Do.	... G.N., F.D., No. 9326 /ST (1), dated 1st April 1949.	For the words "Provincial Government" the words "State Government" shall be substituted.
The Bombay Motor Vehicles Tax Act, 1935 (Bom. XXXIV of 1935).	G.N., R.D., No. 2544/39-III, dated 2nd May 1940.	For the word "Province" the word "State" shall be substituted.
Do.	... G.N., H.D., No. 6122/4, dated 26th June 1944.	For the words "province in British India" the words "State being a Part A State or Part C State" shall be substituted.
The Bombay Opium Smoking Act, 1936 (Bom. XX of 1936).	G.N., R.D., No. 4414/24, dated 31st May 1938.	In the Schedule in column 2— (*a*) against entries Nos. 1 and 3 for the word "Province" the word "State" shall be substituted. (*b*) against entries Nos. 6A and 6B for the words "the City of Bombay" the words "Greater Bombay" shall be substituted.
The Bombay Medical Practitioners Act, 1938 (Bom. XXVI of 1938).	G.N., H. & L. G. D., No. 3150/33, dated 28th September 1948.	For clauses (*a*) and (*b*), the words "they are citizens of India" shall be substituted.
Do.	... G.N., H. & L. G. D., No. 3150/33, dated 11th November 1948.	For clauses (*a*) and (*b*), the words "they are citizens of India" shall be substituted.
The Bombay Lifts Act, 1939 (Bom. X of 1939)	G.N., P.W.D., No. 8225/27-III, dated 8th April 1940.	For the word "Province" the word "State" shall be substituted.

Acts.	Notifications and orders.	Amendments.
1	2	3
The Bombay Sales Tax Act, 1946 (Bom. V of 1946).	G. N., F. D., No. 6495/33 (*iii*), dated 28th March 1949.	For the word "Province" the word "State" shall be substituted.
Do. ...	G. N., F. D., No. 6495/33-S.O., dated 2nd December 1946.	For the words "His Majesty's or" the words "the Armed Forces of the Union or of" shall be substituted.
The Bombay Electricity (Special Powers) Act, 1946 (Bom. XX of 1946).	G. N., P. W. D., No. 1932/36, dated 8th October 1946.	In the form of application for the word "Provincial" the word "State" shall be substituted.
The Bombay Refugees Act, 1948 (Bom. XXII of 1948).	G. N., Reh. D., No. R. 133-I-B, dated 6th June 1949.	1. For the words "Provincial Government" the words "State Government" shall be substituted. 2. For the word "Province" the word "State" shall be substituted.
The Bombay Tenancy and Agricultural Lands Act, 1948 (Bom. LXVII of 1948).	G. N., R. D., No. 870/49-F, dated 31st October 1949.	For the words "Provincial Government" the words "State Government" shall be substituted.
Do. ...	G. N., R. D., No. 828/49, dated the 14th July 1949.	For the words "the Crown" the word "Government" shall be substituted.
The Bombay Prohibition Act, 1949 (Bom. XXV of 1949).	G. N., R. D., No. 10484/45 (*s*), dated 16th June 1949.	In Schedules A and B, for the word "Province" the word "State" shall be substituted.
Do. ...	G. N., R. D., No. 10504/39, dated 23rd July 1949.	1. For the word "Province" wherever it occurs the words "State of Bombay" shall be substituted. 2. For the words "Dominion of India" the words "territory of India" shall be substituted.
Do. ...	G. N., R. D., No. 10484/45, dated 29th July 1949.	1. For the words "Dominion of India" the words "territory of India" shall be substituted. 2. For the words "Provincial Government" the words "State of Government" shall be substituted.

No. 11579.—The following amendments to the rules, published in Government Notification, General Department, No. 6773, dated the 22nd September 1913, made by the Bombay Medical Council, having been approved by the Government of Bombay are published as required by section 19 (*2*) of the Bombay Medical Act, 1912 (Bom. VI of 1912), namely :—

(1) In rules 7, 10, 13, 48 and 70, for the words "Provincial Government" the words "State Government" shall be substituted.

(2) In rule 69, for the word "Province" the word "State" shall be substituted.

(3) In rules 69(*a*) and 93, for the words "His Majesty's Services" the words "Government Services" shall be substituted.

No. 11580.—The following amendments to the Bombay Co-operative Tribunal Regulations, 1949, made by the Bombay Co-operative Tribunal, in exercise of the powers conferred on it by sub-section (*4*) of section 63-A of the Bombay Co-operative Societies Act, 1925 (Bom. VII of 1925), and with the previous sanction of the Government of Bombay, are hereby published as required by sub-section (*5*) of the said section 63-A :—

(1) In the proviso to regulation 3 (2) and in Form C, for the word "Province" the word "State" shall be substituted.

(2) In regulation 5, for the words "Provincial Government" the words "State Government" shall be substituted.

No. 11581.—The following amendments to the Bombay Sales Tax Tribunal Regulations, 1948, made by the Sales Tax Tribunal, in exercise of the powers conferred on it by sub-section (*4*) of section 4 of the Bombay Sales Tax Act, 1946 (Bom. V of 1946), and with the previous sanction of the Government of Bombay, are hereby published as required by sub-section (*5*) of the said section 4 :—

(1) In regulation 3 (2) and in Forms D, F, G, H, I and J, for the word "Province" the word "State" shall be substituted.

(2) In regulation 5, for the words "Provincial Government" the words "State Government" shall be substituted.

No. 11582.—The following amendments to the Bombay Newspaper Advertisements Tax Tribunal Regulations, 1949, made by the Bombay Newspaper Advertisement Tax Tribunal, in exercise of the powers conferred on it by rule 14 (2) (*c*) of the Bombay Newspaper Advertisements Tax Rules, 1949, and with the previous sanction of the State Government are hereby published for general information :—

(1) In regulation 5, for the words "Provincial Government" the words "State Government" shall be substituted.

(2) In regulation 3 (2) and in Forms B, D, E, F, G and H, for the word "Province" the word "State" shall be substituted.

By order of the Governor of Bombay,

P. M. LAD,
Secretary to Government.

INDEX OF SHORT TITLES OF RULES AND ORDERS.

	PAGE
A	
Agricultural Debtors Relief Rules, 1947—Bombay ...	1285
Agricultural Produce Markets Rules, 1941—Bombay ...	1029
B	
Beggars Rules, 1946—Bombay ...	1069
Betting Tax Rules, 1931—Bombay ...	535
C	
Canal Rules, 1934—Bombay ...	147
Children and Juvenile Courts Rules, 1936—Bombay...	1653
Co-operative Societies Rules, 1927—Bombay ...	548
Co-operative Tribunal Regulations, 1949—Bombay ...	569
Co-operative Tribunal Rules, 1948—Bombay ...	568
Cotton Control Rules, 1944—Bombay ...	1063
Cotton (Statistics) Rules, 1947—Bombay ...	1179
Court of Wards Rules, 1908—Bombay ...	239
D	
Devadasis Protection Rules, 1936—Bombay ...	821
Dharwar Borstal School Rules—1930 ...	603
E	
Electricity Duty Rules, 1932—Bombay ...	624
F	
Faculty of Indian Systems of Medicine Rules, 1949—Bombay ...	977
G	
Gas Supply Rules, 1940—Bombay ...	995
H	
Habitual Offenders Restriction Rules, 1948—Bombay ...	1319
Hindu Divorce Rules, 1948—Bombay ...	1283
Home Guards Rules, 1946—Bombay ...	1181
Housing Board Rules, 1949—Bombay ...	1649
I	
Industrial Court Regulations, 1947 ...	1231
Industrial Relations Rules, 1947—Bombay ...	1190
Irrigation Record of Rights Rules, 1918—Bombay ...	187
K	
Khar Lands Rules, 1949—Bombay ...	1663
L	
Labour Courts (Practice and Procedure) Rules, 1947 ...	1259
Land Improvement Schemes Rules, 1949—Bombay ...	1057
Land Requisition (Determination of Compensation) Rules, 1949—Bombay ...	1607
Land Requisition (Exemption) Rules, 1948—Bombay ...	1611
Land Revenue Rules, 1921 ...	33
Legislature Members' Salaries and Allowances Rules, 1937—Bombay ...	941
Lifts Rules, 1940—Bombay ...	1003
Live—stock Improvement Rules, 1935—Bombay ...	811
Local Boards Account Code, 1935—Bombay ...	364
Local Boards Election Rules, 1932—Bombay ...	346
Local Boards Prevention of Epidemic Diseases Orders, 1935—Bombay ...	526
Local Boards Travelling Allowances Rules, 1936—Bombay ...	501
Local Fund Audit Rules, 1931—Bombay ...	611
Lotteries and Prize Competitions Control and Tax Rules, 1949—Bombay ...	1615

M

	PAGE
Maternity Benefit Rules, 1929—Bombay	599
Medical Practitioners' Rules, 1939—Bombay	951
Money-lenders Rules, 1947—Bombay	1307
Motor Vehicles Tax Rules, 1940—Bombay	909

N

Newspaper Advertisements Tax Rules, 1949—Bombay	637
Newspaper Advertisements Tax Tribunal Regulations, 1949—Bombay	648
Non-Agriculturists' Loans Rules, 1930—Bombay	589
Nurses, Midwives and Health Visitors Registration Rules, 1935—Bombay	825

P

Parsi Public Trusts Registration Rules, 1937	929
Prevention of Fragmentation and Consolidation of Holdings Rules, 1948—Bombay	1589
Primary Education Rules, 1949—Bombay	1363
Probation of Offenders Rules, 1940—Bombay	945
Public Trusts Registration Rules, 1937—Bombay	888

R

Refugees Rules, 1949—Bombay	1599
Rents, Hotel and Lodging House Rates Control Rules, 1948—Bombay	1355
Revenue Tribunal Regulations, 1939—Bombay	1025
Revenue Tribunal Rules, 1939—Bombay	1023
Revenue Tribunal Records Inspection, Search and Copies Regulations, Bombay	1027

S

Sales of Motor Spirit Taxation Rules, 1948—Bombay	1163
Sales Tax Rules, 1946—Bombay	1084
Sales Tax Tribunal Regulations, 1948—Bombay	1148
Sales Tax Tribunal Rules, 1946—Bombay	1083
Shops and Establishments Rules, 1949—Bombay	1687
Sugarcane Cess Rules, 1949—Bombay	1706

T

Tenancy and Agricultural Lands Rules, 1949—Bombay	1630
Tenancy and Agricultural Lands (Tribunal Proceedings) Rules, 1949—Bombay	1625
Totalisator Tax Rules, 1925—Bombay	533
Trade Disputes Conciliation Rules, 1934	817

U

Urban Immoveable Property Tax (Determination of Annual Letting Value) Rules	634

V

Village Benches Rules, 1940—Bombay	773
Village Panchayats Budget and Accounts Rules, 1934—Bombay	751
Village Panchayats Election Rules, 1948—Bombay	736
Village Sanitation Boards Election Rules, 1932—Bombay	229
Village Panchayats Secretaries (Conditions of Service) Rules 1948—Bombay	747
Village Panchayats Taxes and Fees Rules, 1944—Bombay	787

W

Wage Board Rules, 1948—Bombay	1229
Warehouses Rules, 1949—Bombay	1337
Weights and Measures Rules, 1934—Bombay	660